# Catalena

S88611



## DESCRIPTION

Graceful simplicity defines Catalena, a design that feels both elegant and substantial. Gently curved arms sweep upward, unified by a circular bottom band and crowned with a hand-cut crystal bobeche. Crisp white shades softly diffuse the light from concealed candelabra bulbs. Catalena harmonizes sculptural balance with quiet sophistication.

## AVAILABLE TRIM



Radiance® Crystal (R)

## AVAILABLE FINISHES



Heirloom Gold (-22)



Heirloom Silver (-44)



Antique Silver (-48)



Ferro Black (-59)



Textured Bronze (-73)



Heirloom Bronze (-76)



White Gold (-711)

## LINE DRAWING

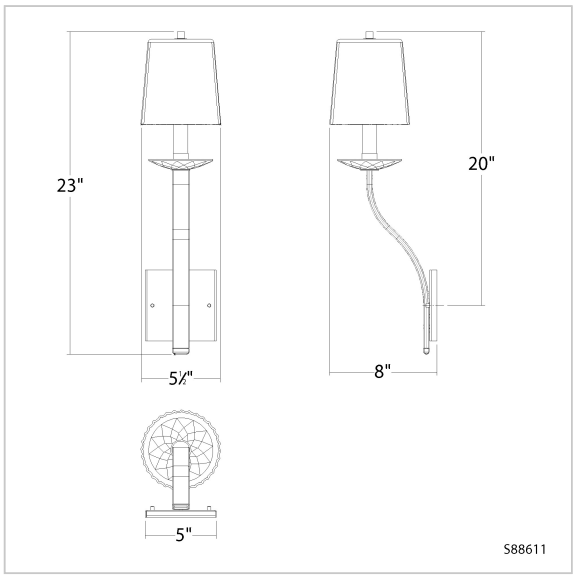


## SPECIFICATIONS

| | |
|---|---|
| **Light Source** | Incandescent |
| **Standards** | UL/cUL |

| Model | Finish | Crystal | # of Lights | Voltage | Height | Width | Length | Weight |
|---|---|---|---|---|---|---|---|---|
| S88611 | - 22 - 44<br>- 48 - 59<br>- 73 - 76<br>- 711 | R | 1 Light | 120V | 21" | 6" | 8" | 4lbs |

**Example: S88611-22R**



**schonbek.com**
Phone (800) 836.1892 | Fax: (518) 563.4228

**Headquarters/Eastern Distribution Center**
61 Industrial Blvd, Plattsburgh, NY 12901