Installation Manual

Any question please contact us:
support@jubest.com

MYPH6P-36x80L

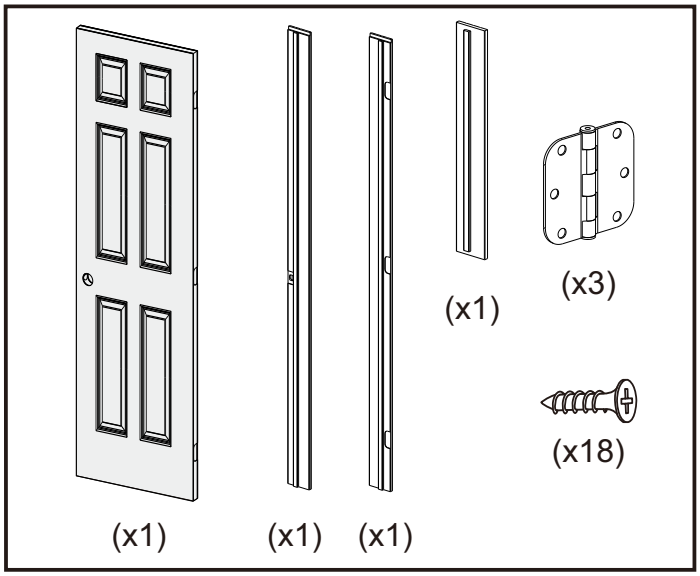

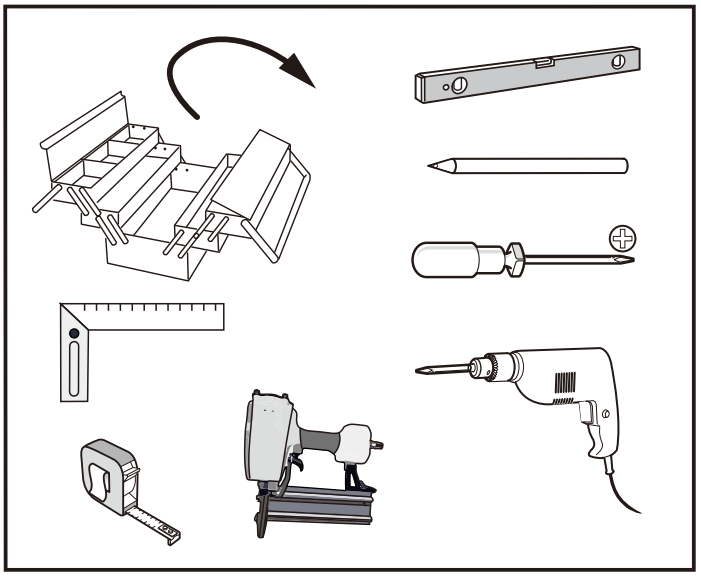

Unit Dimension	Rough Opening Width	Rough Opening Height
24"	26"	82"
28"	30"	82"
30"	32"	82"
32"	34"	82"
36"	38"	82"

Unit dimension for assembled 36*80in left handed door slab with knock down jamb.

1

Rough opening inspection
Ensure the rough opening is 1/2 in wider and higher than the assembled door frame.

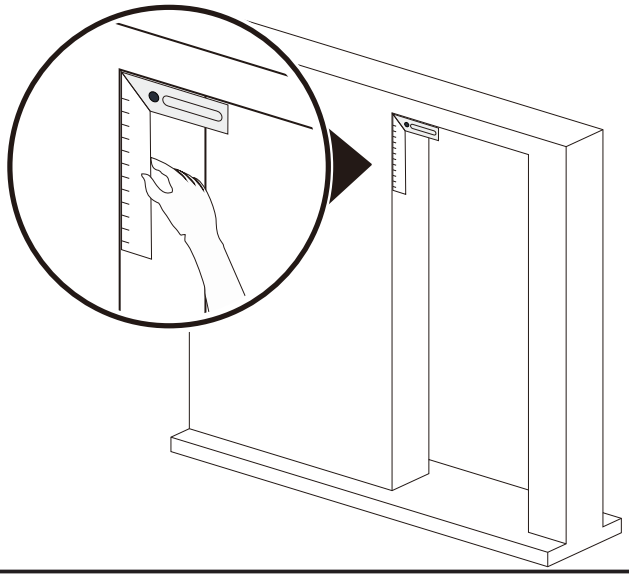

2

Lay the jamb kits pieces on the floor, Ensure head jamb, hinge jamb and latch jamb match up and Join the jamb kit.

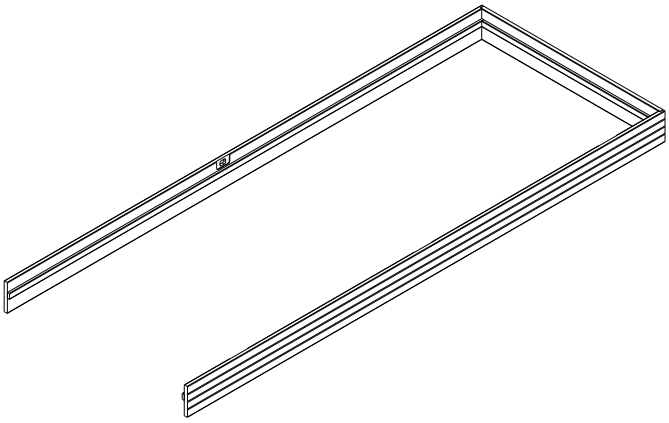

3

Attach the head jamb to latch jamb and hinge jamb using self tapping screws ,make sure the joints are secure and flush before installing the jamb.

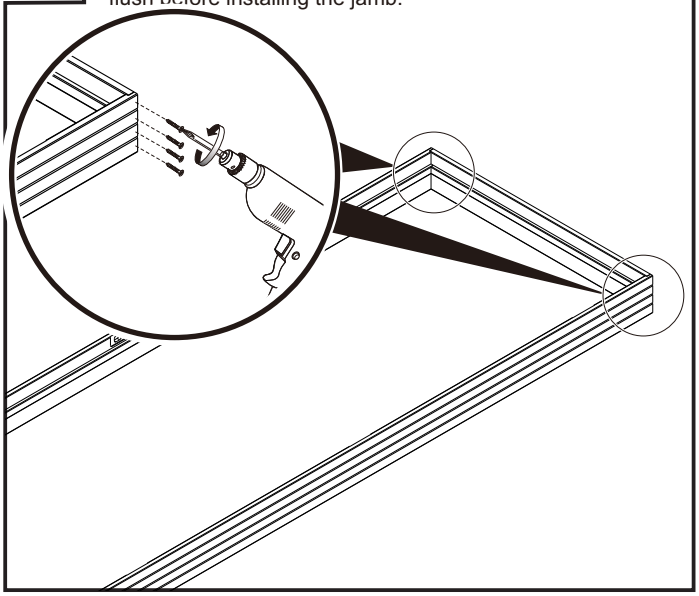

4

Place the assembled door frame inside the rough door opening and put a shim(not provided) underneath the jamb just in case small adjustments need to be made.

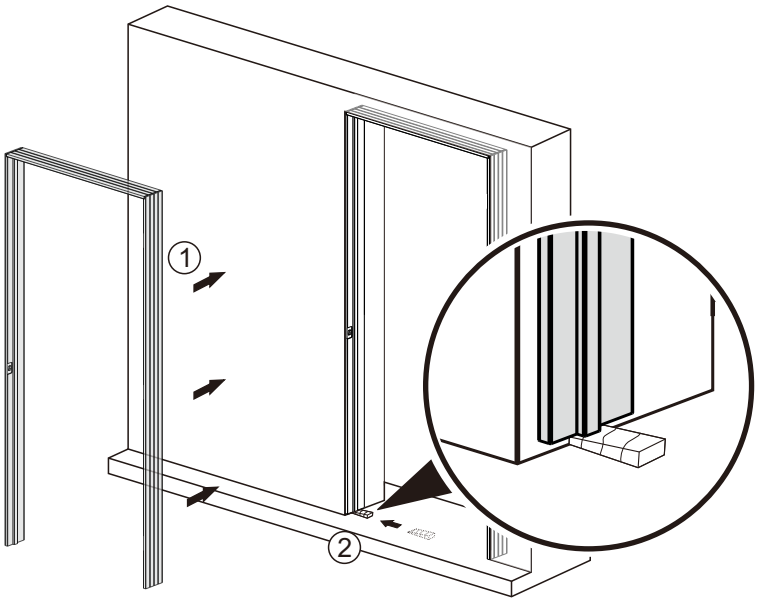

5

Use shim to adjust and make the right position.

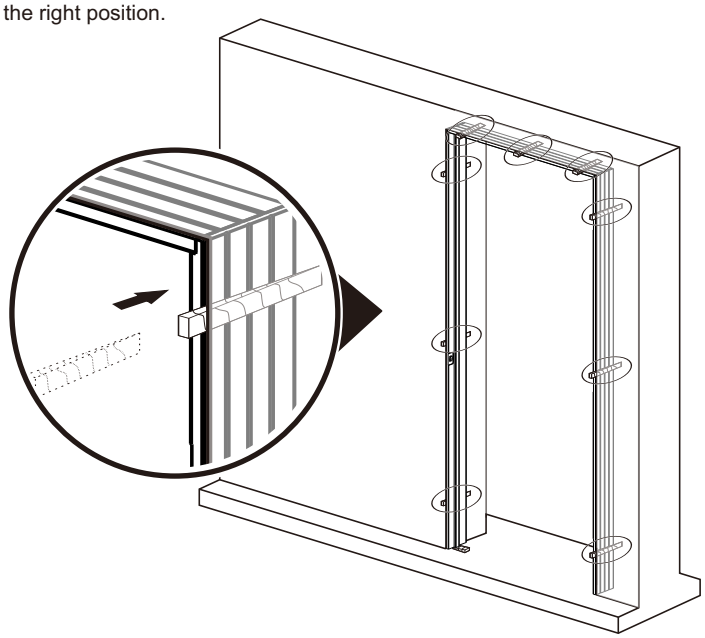

6

Starting with top of the jamb,using the nailer and two inch nail to attach the jamb to the door frame, driving nail through the shim and repeat it on the jamb.

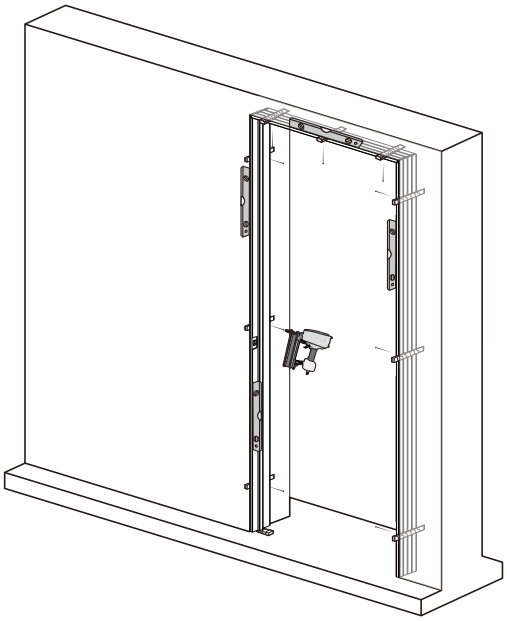

7

Mount hinge onto the cutout of door slab.

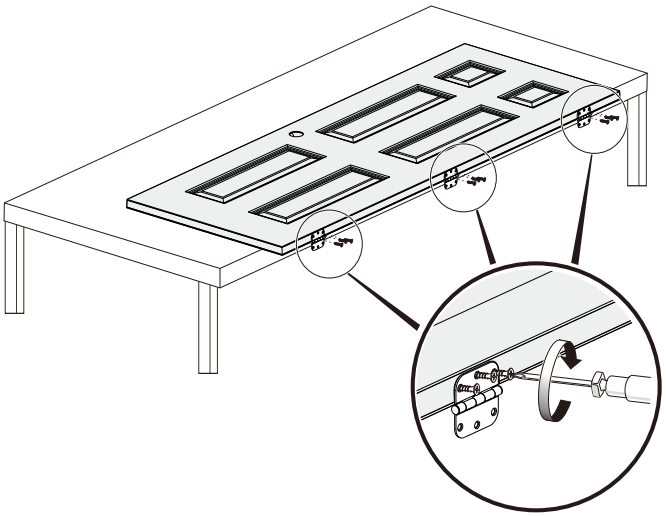

8

Align the door slab with hinge cutout in the jamb, using provided screws to attach the hinge to the Jamb.

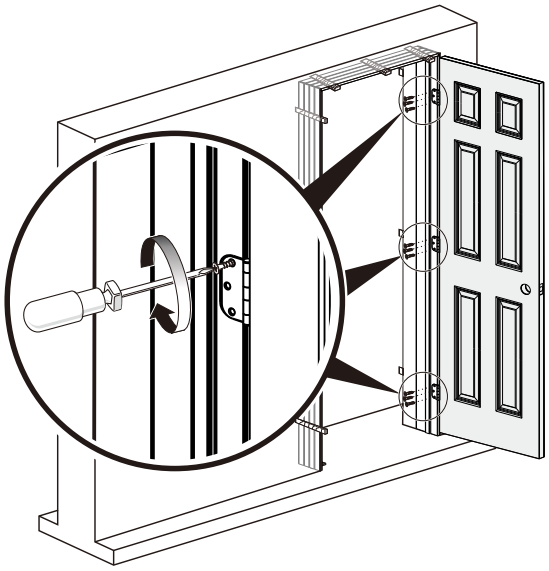

9

Make sure the door and jamb are level in plum. Open and close the door to adjust.

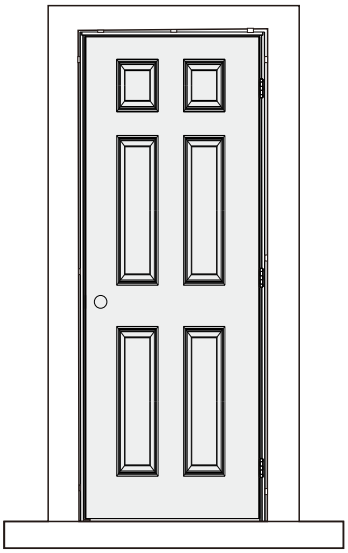

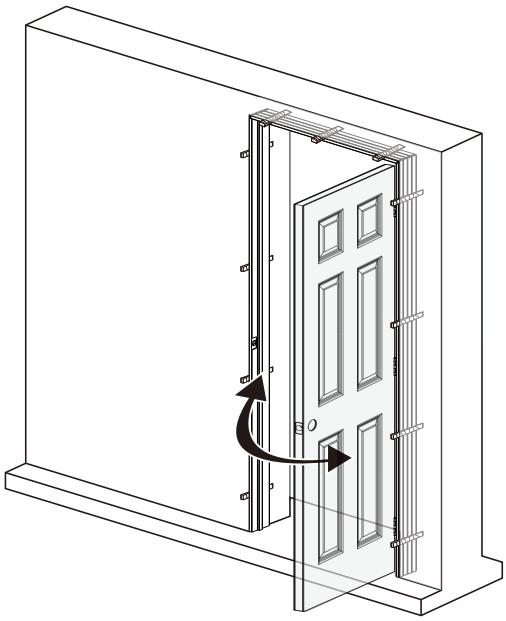

10
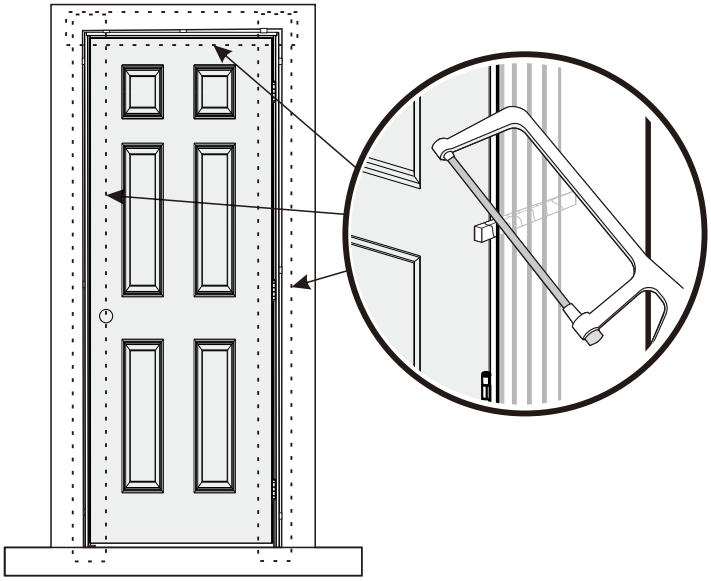
Once the door and jamb are in alignment, use a saw to score the shims so they are flush with the door frame.