Parts & Hardware

Identify the components and hardware before starting assembly.

	A	1
	B	5
	C	5
	D	5
	E	1

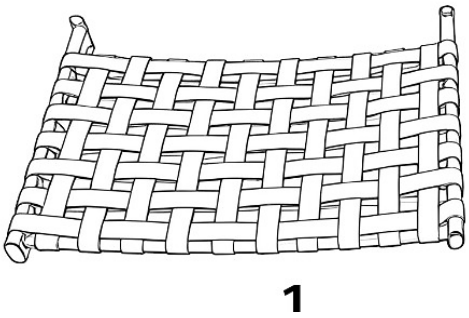

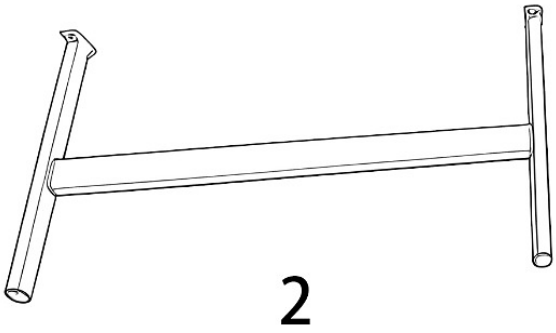

1 Backrest 2 Leg frame 3 Seat

Hardware

A	Hex key	x 1
B	Long bolt	x 5
C	Short bolt	x 5
D	Nut	x 5
E	Open-end wrench	x 1

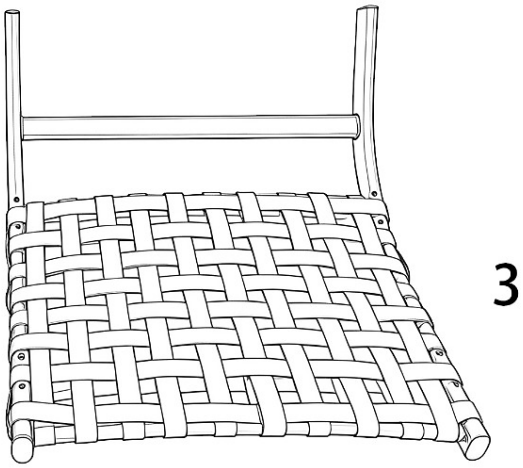

Before you begin

Work on a clean, level surface. Protect the woven surfaces and frame with a soft cloth.

Start all bolts loosely. Do not fully tighten the connections until the chair is assembled and all four feet rest evenly on the floor.

Use the hardware shown for each connection. Keep tools and small hardware away from children.

01 / Connect the backrest

Attach backrest (1) to seat (3) using the connection shown below.

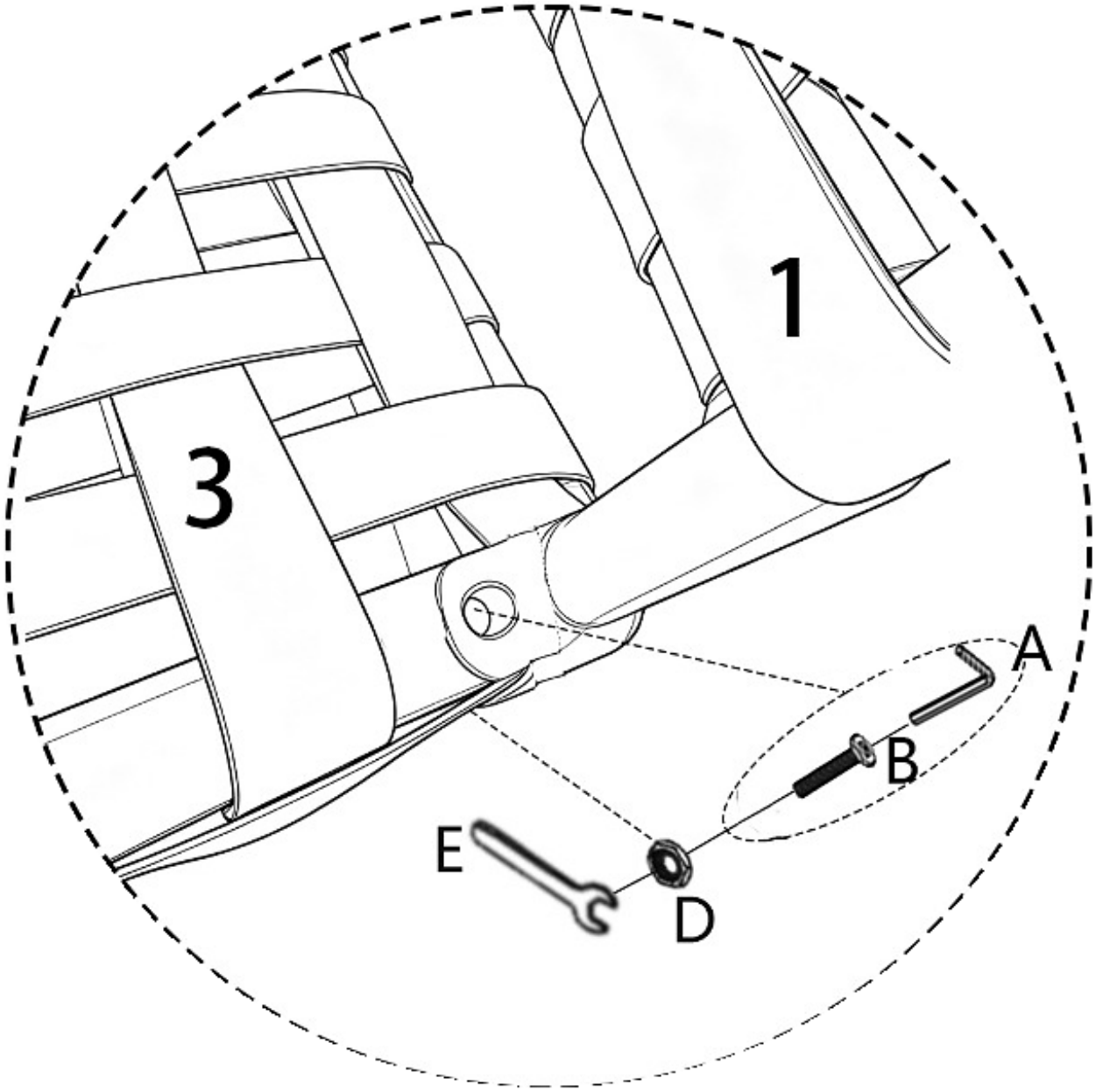

Use B + D, with tools A + E

Align the mounting points on backrest (1) and seat (3). Insert long bolt (B) and fit nut (D) as illustrated. Hold the nut with wrench (E) while turning the bolt with hex key (A).

Start the other matching connections loosely. Keep the backrest aligned; do not fully tighten yet.

02 / Attach the leg frame

Secure leg frame (2) to seat (3), then check the assembled chair.

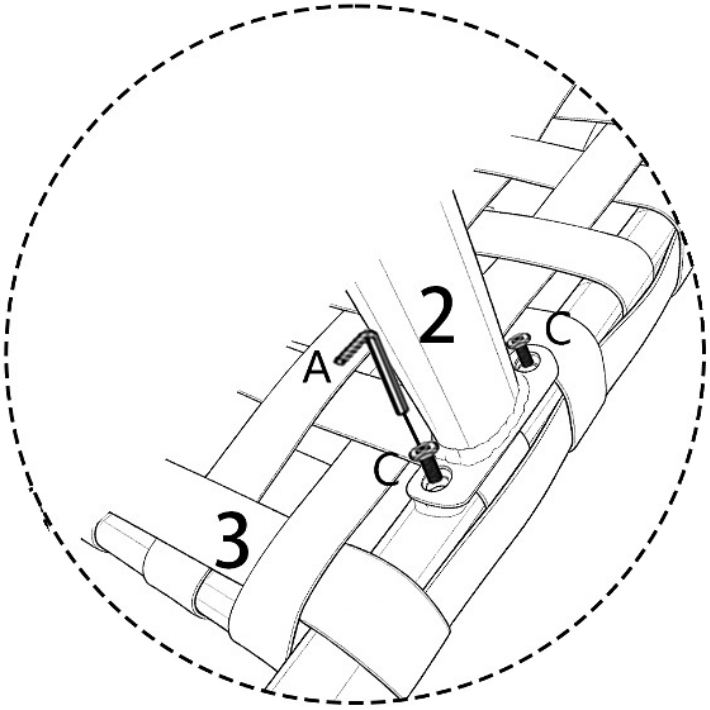

Use C + tool A

Align leg frame (2) with the mounting points beneath seat (3). Insert short bolts (C) and turn them with hex key (A), as shown.

Start all matching connections before tightening them evenly.

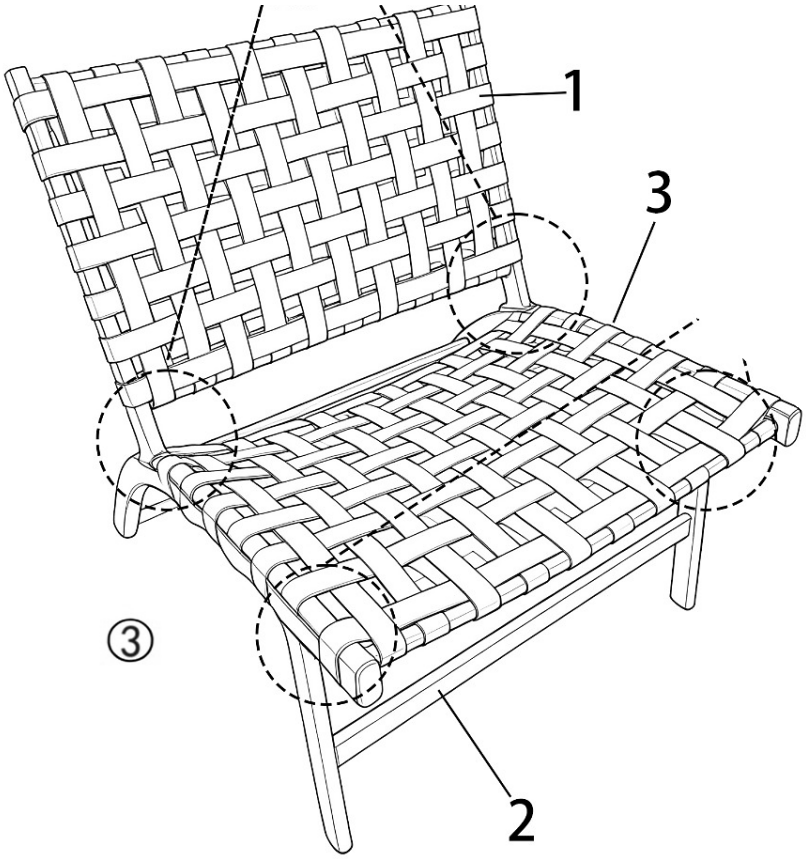

Final check

Place the chair upright on a level floor. Check that all four feet rest evenly, then fully tighten all connections.

Check that the backrest and seat are secure before use. Recheck the connections periodically.