USER'S MANUAL
Twin Bed Frame

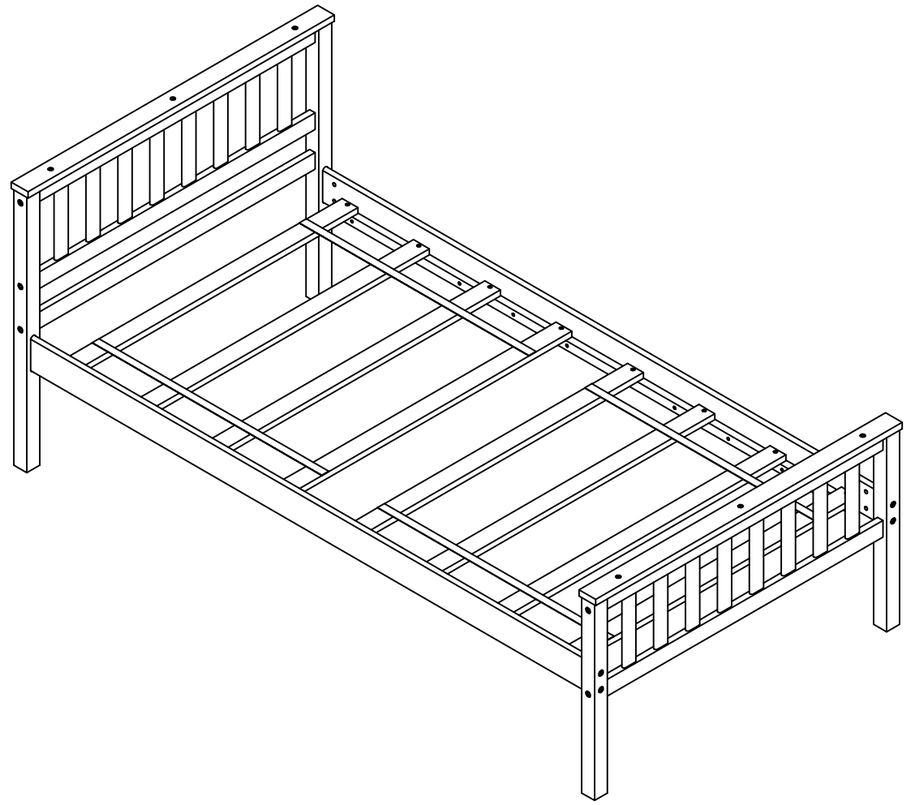

Detail View

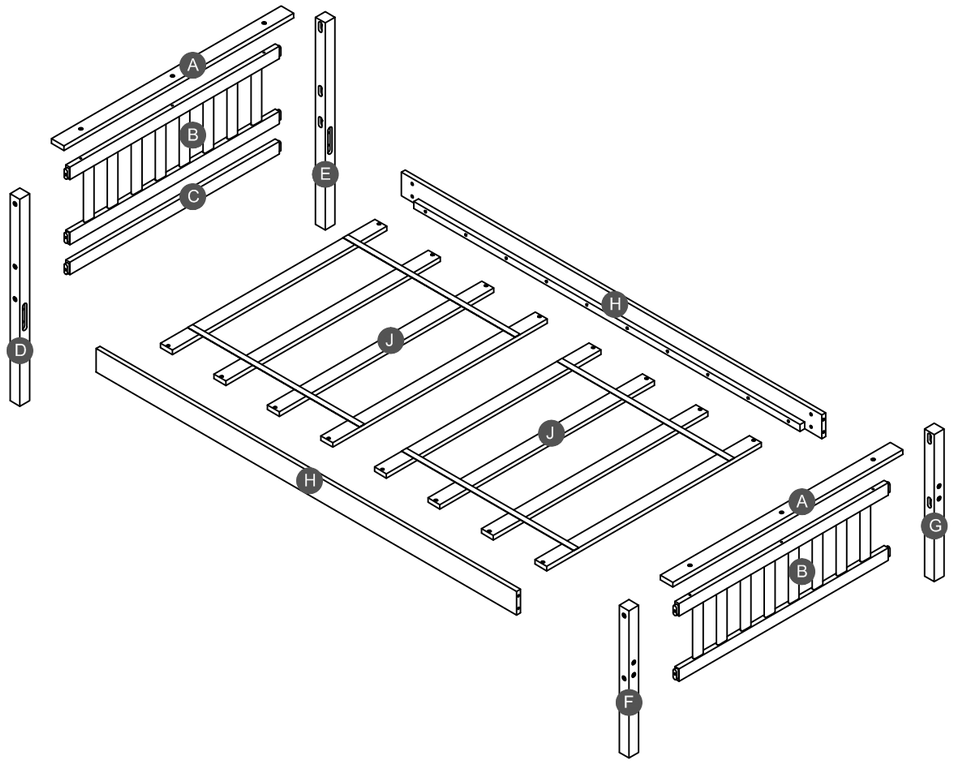

PART LIST

A Cap for HB & FB - 2pcs	**B** 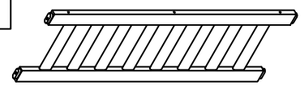 Frame HB & FB - 2pcs	**C** HB Horizontal bar - 1pc
D Leg HB (Left) - 1pc	**E** Leg HB (Right) - 1pc	**F** 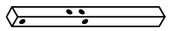 Leg FB (Left) - 1pc
G Leg FB (Right)- 1pc	**H** Side rail - 2pcs	**J** 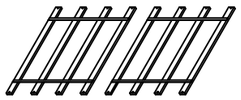 Slats - 8pcs

Care and Maintenance

Use a soft, clean cloth that will not scratch the surface when dusting.

Use of furniture polish is not necessary.

Should you choose to use polish, test first in an inconspicuous area.

Using solvents of any kind on your furniture may damage the finish.

Never use water to clean your furniture as it may cause damage to the finish.

Liquid spills should be removed immediately. Using a soft clean cloth, blot the spill gently. Avoid rubbing.

Check bolts/screws periodically and tighten them if necessary.

Further advice about wood furniture care

It is best to keep your furniture in a climate-controlled environment.

Extreme temperature and humidity changes can cause fading, warping, shrinking and splitting of wood.

It is advised to keep furniture away from direct sunlight as sun may damage the finish.

Proper care and cleaning at home will extend the life of your purchase.

Following these important and helpful tips will enhance your furniture as it ages.

STEP 5:

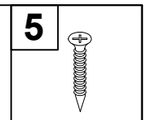

5

16PCS

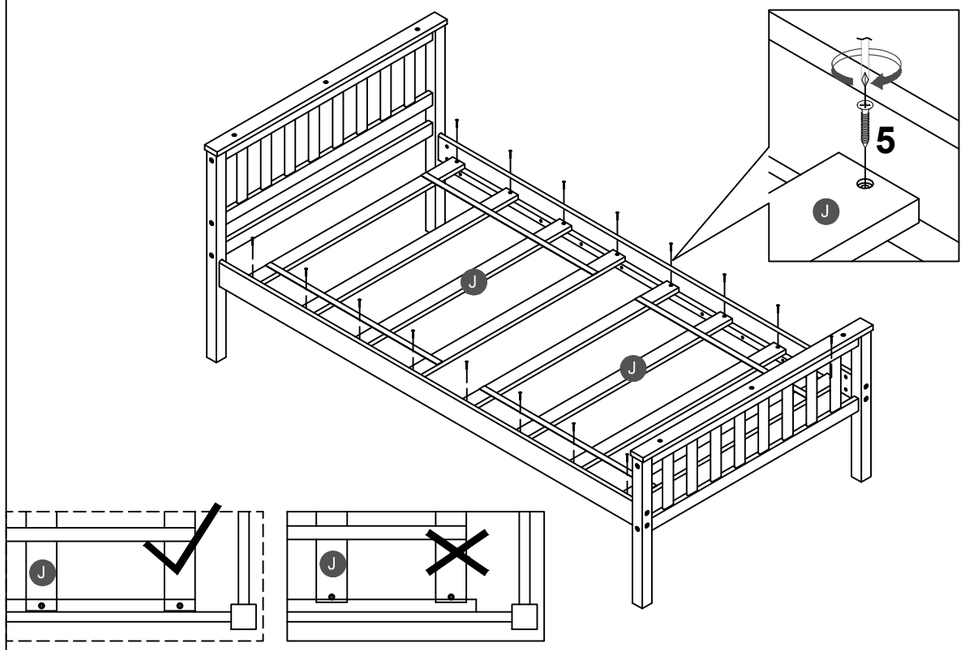

Note: Do not lock the screws of the bed slats to the outermost edge of the bed slats, you need to leave a certain space at the edges, otherwise it will cause the board to break

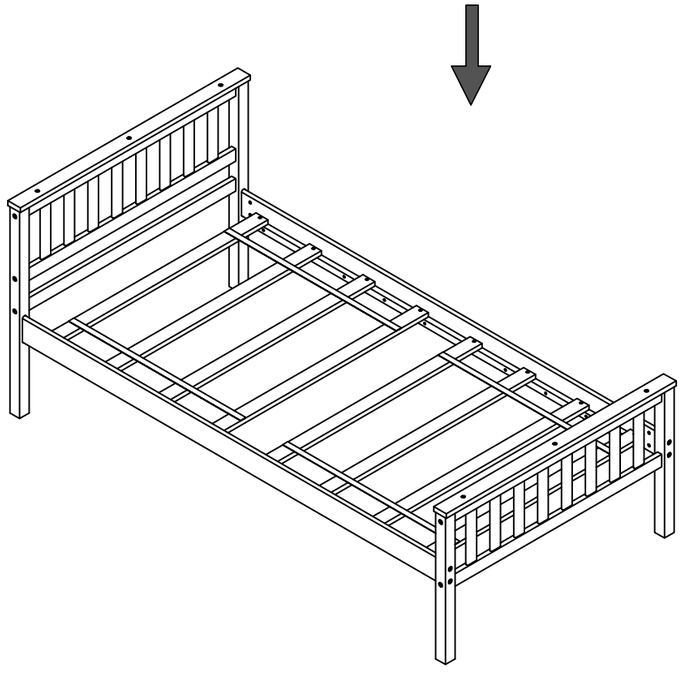

HARDWARE LIST

1 (Ø15)1/4"*100mm	2 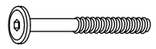 (Ø15)1/4"*80mm	3 1/4"*15 (9.5mm)
Hex-Head bolts (8pcs)	Hex-Head bolts (10pcs)	Horizontal-Hole bolts(18pcs)
4 (1/4")4.5*58mm	5 Ø4*30mm	6 (Ø12)1/4"*40mm
Allen key (1pc)	Wood screws (16pcs)	Hex-Head bolts (6pcs)

ASSEMBLY TOOLS REQUIRED (NOT INCLUDED)

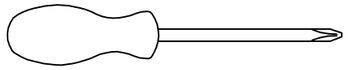

PLEASE BE CAREFUL DO NOT DAMAGE THE HOLE POSITION WHEN YOU USE POWER TOOLS !

STEP 1:

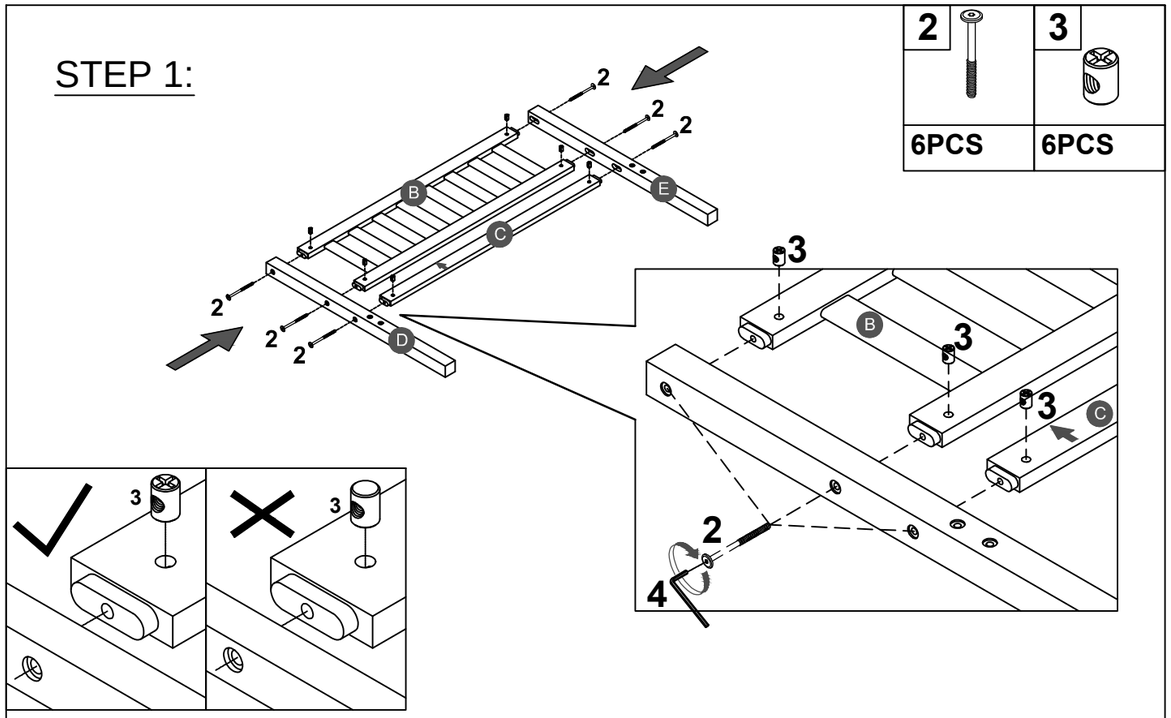

Note:Part 3 will face up with the "x" mark on it, otherwise it cannot be tightened

STEP 2:

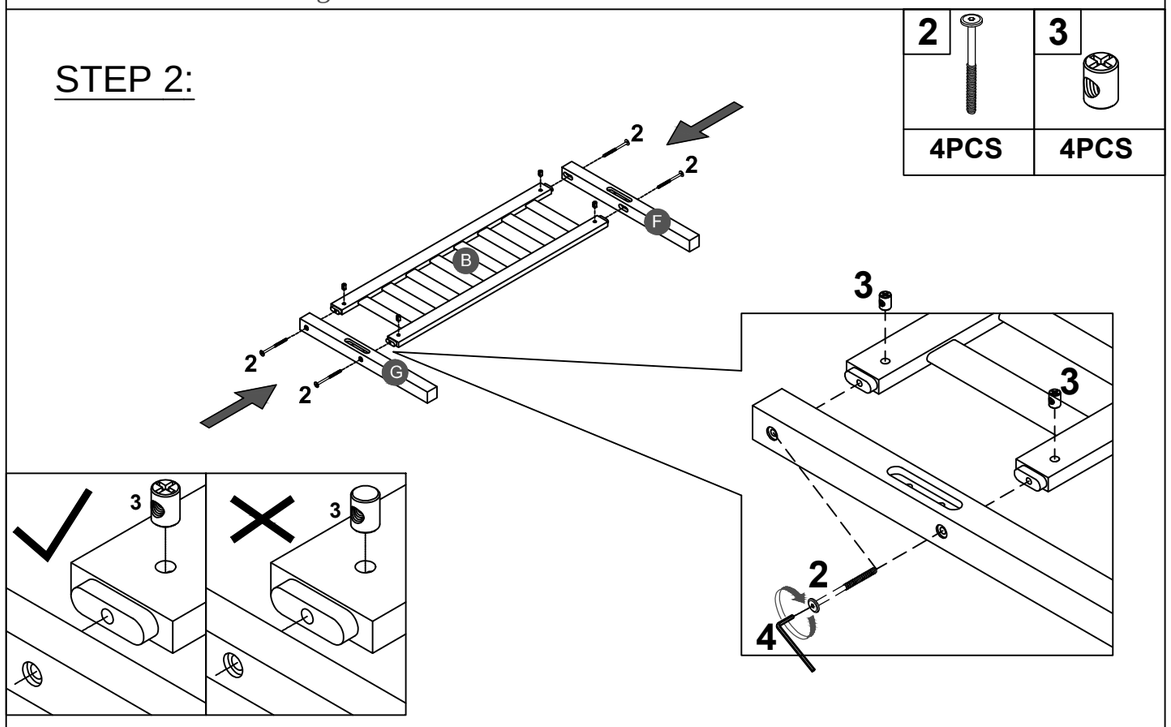

Note:Part 3 will face up with the "x" mark on it, otherwise it cannot be tightened

STEP 3:

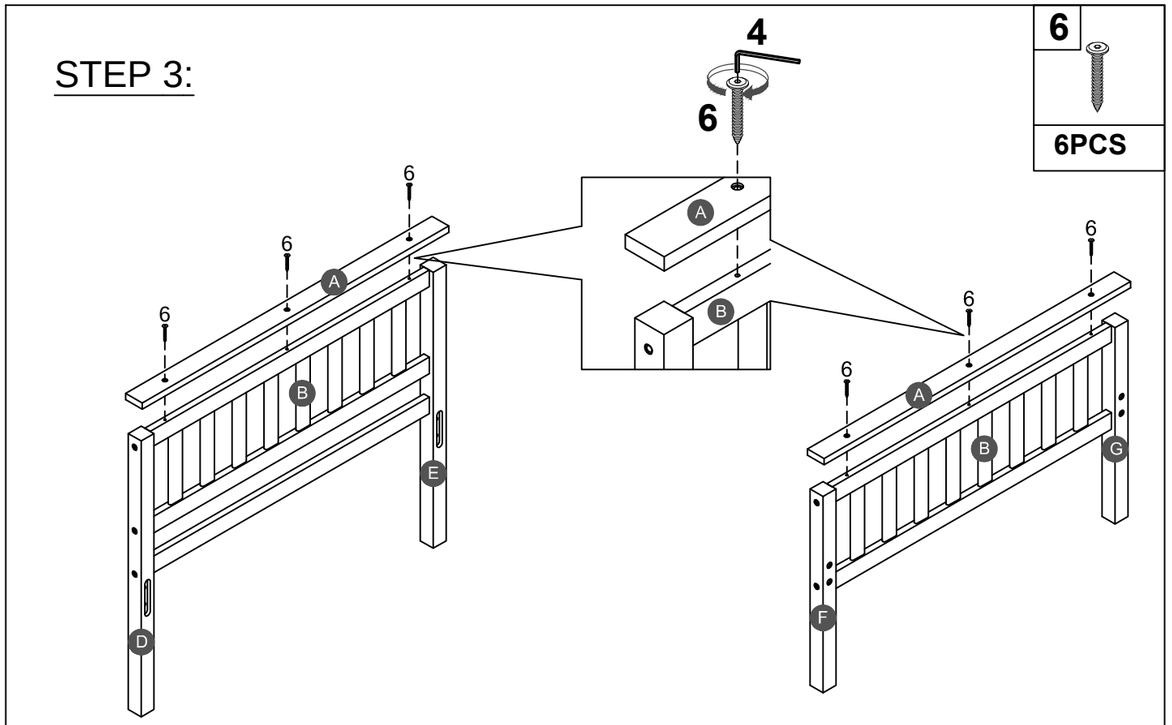
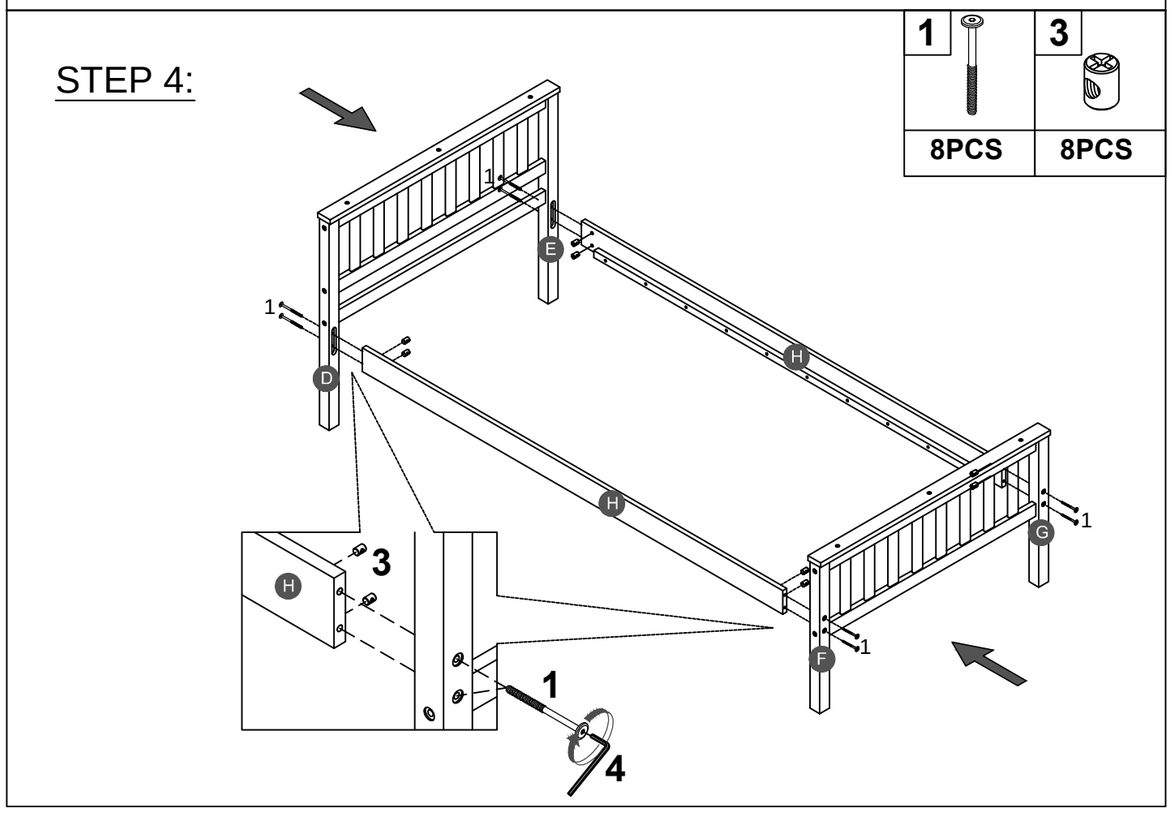
STEP 4: