CONTENTS

01 HELP CENTER ---------- 1

02 WARNING ---------- 2

03 MATERIAL LIST ---------- 3-14

04 INSTALLATION ---------- 15-126

HELP CENTER

Question about your product? We're here to help. Visit us at:



Chat Support



Product Inquiry



Orders FAQ


Product Assembly

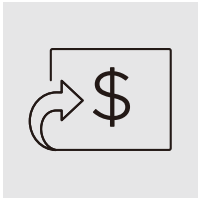

Returns & Refunds

We Stands Behind the Quality of Their Furniture

If you have any issues with your item please let us know! We will always do our best to come up with a solution that you will be happy with.Please get in touch with our customer service team before returning the product.And Please do not throw away the original box(es) if you have not finished assembling or comfirmed that there are no quality issues. Length of return period:

Items can be returned within 30 days of purchase.

In the meanwhile,everything you purchased from us comes with a one-year warranty.

Who is responsible for the retun shipping fee:

We will cover the return shipping fees if:

1. Your item has a manufacturing defect in its materials or workmanship.For example, tornwicker or misaligned screw holes.We will send you a prepaid shipping label after photos are sent.
2. Your item was damaged in transit.For example, glass is broken or wicker is damaged,We will send you a prepaid shipping label after photos are sent.
3. You receive the wrong box(es) due to a warehouse error. We will send you a prepaid shipping label after photos are sent of the wrong SKU numbers on the outer box(es).
4. One or more boxes are lost in transit. We will send you a prepaid shipping label if you no longer want the item.

* However, we still hope to work with you for a better solution instead of a retum. Please don't hesitate to contact our customer service team.

Customer will cover the return shipping fees if:

1. You don't like the product(s) after receiving the box(es).
2. You no longer need the product(s) but you have received the box(es),
3. You buy the product(s) by mistake but you have received the box(es).
4. Order/Shipment cancellation failed and you have received the box(es).

Return Request

In order to get a full refund as described in this return policy, all items must be:

(1) In a brandnew/unused condition, please provide photos before and after packaging.

(2) When returning, all accessories and parts are firmly packed in all original packaging. If your return does not meet the requirements, you may not get a full refund.
When will I be refunded?
The refund is released once the goods have been returned to our warehouse.
What if the product is damaged/defective outside of the valid return period?
We want you to be a happy customer. Please reach out to us by email and we will come up with a solution to make sure you are satisfied.

WARNING



1. Two or more people are required for assembly.
2. A ladder and electric drill may be necessary.
3. Do not erect the structure in heavy wind or inclement weather.
4. Do not leave up this unit for extended periods of time, as it is not a permanent structure or designed to withstand sustained wind or rain.lt is a temporary, portable shelter that shields you from sunlight and rain. The screens also block flying insects.
5. Do not use candles, matches, or any open flame near the tent.
6. To better align the screws for practical situations, do not fully tighten screws initially.
7. Professional installation is highly recommended

- In case of windy weather, please do not stand in the gazebo.
- Please do not stand under the gazebo in case of heavy snowfall.
- For safety, please use expansion screw to reinforce the posts to the ground.
- In windy weather, please tighten the fence and netting to avoid tearing in high winds.
- In extreme weather condition, you can use a rope to pull the four corners of the gazebo to keep it stable.
- Please clear the snow off the roof in time for the heavy snowfall.
- Make sure all sciews are tightened before use.
- Check all screws, buckles and straps every 90 days.
- Please keep all screws loose during the assembly process and tighten them after completing the installation.
- Do not use or store next to a pole with open flame or flammable chemical.
- Please note that some parts have sharp edges and should be handled with gloves.
- If any parts are missing, broken, damaged or worn, stop using the product until repairs are made or factory replacement parts are installed.
- Installation of the product in a manner that does not conform to the manufaclur-er's may result in the loss of the warranty policy for this product.
- Consult your local authorities to check if permits are required to erect the shed.

MATERIAL LIST

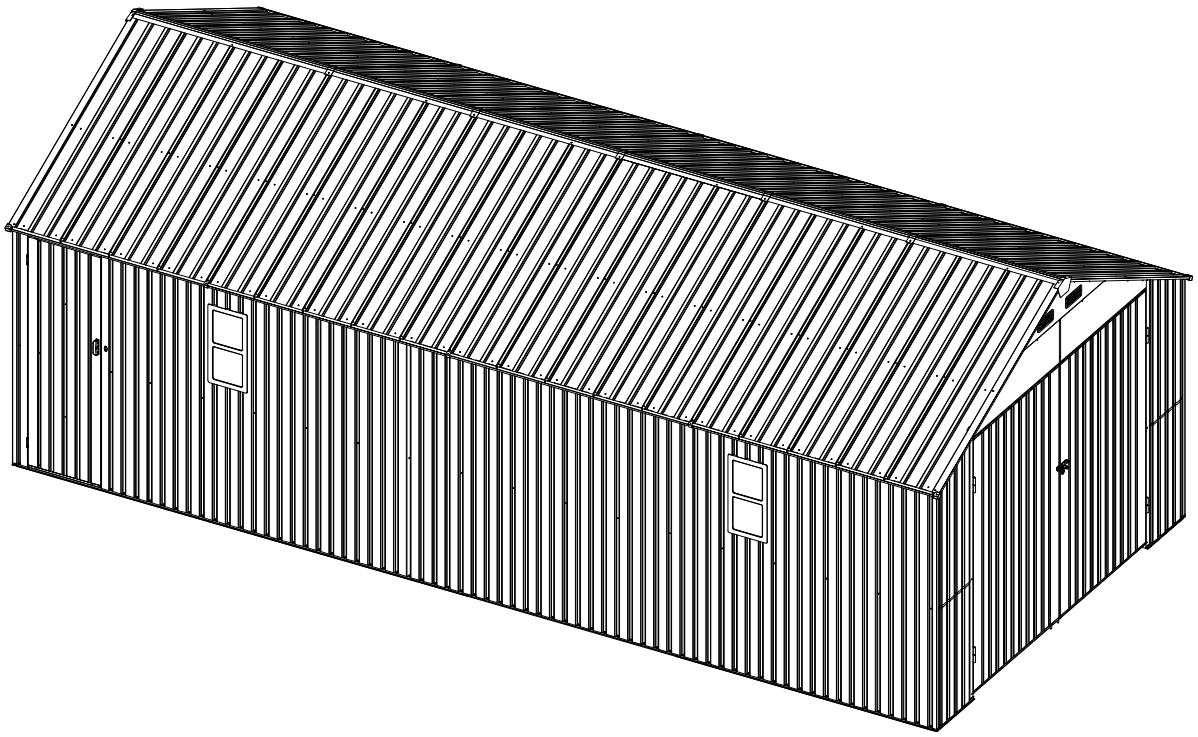

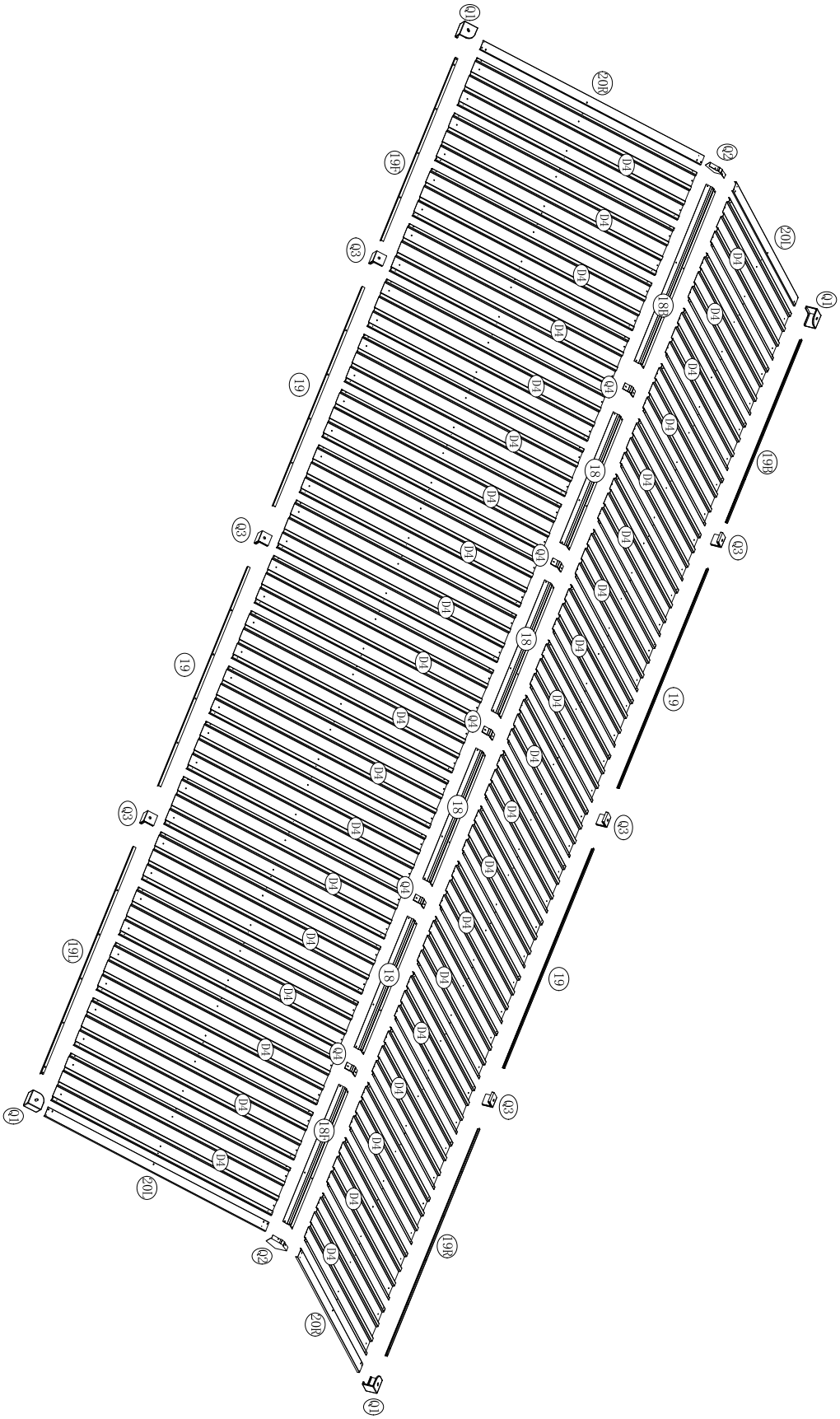
01
02
03
04
18
19
19F
19R
20
20F
20R

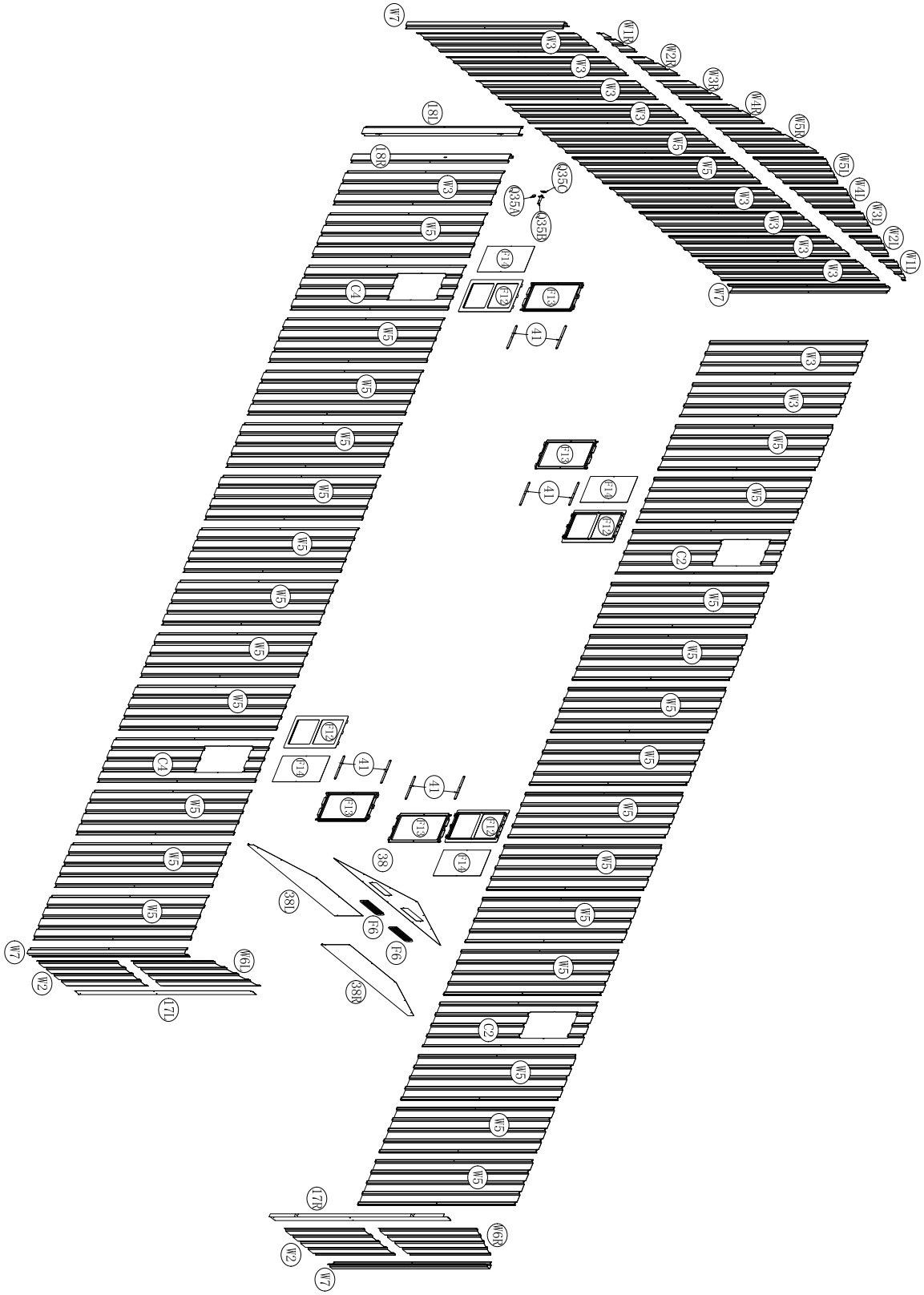
W7
W3
W1R
W2R
W4R
W5R
W6R
W1L
W4L
W5L
W6L
W2L
L8
L8R
L8L
Q35C
Q35V
Q35A
L14
L12
L13
C4
W5
L11
C2
L7
L6
Q38
Q38L
Q38R
L7R
L7L
W6
W2

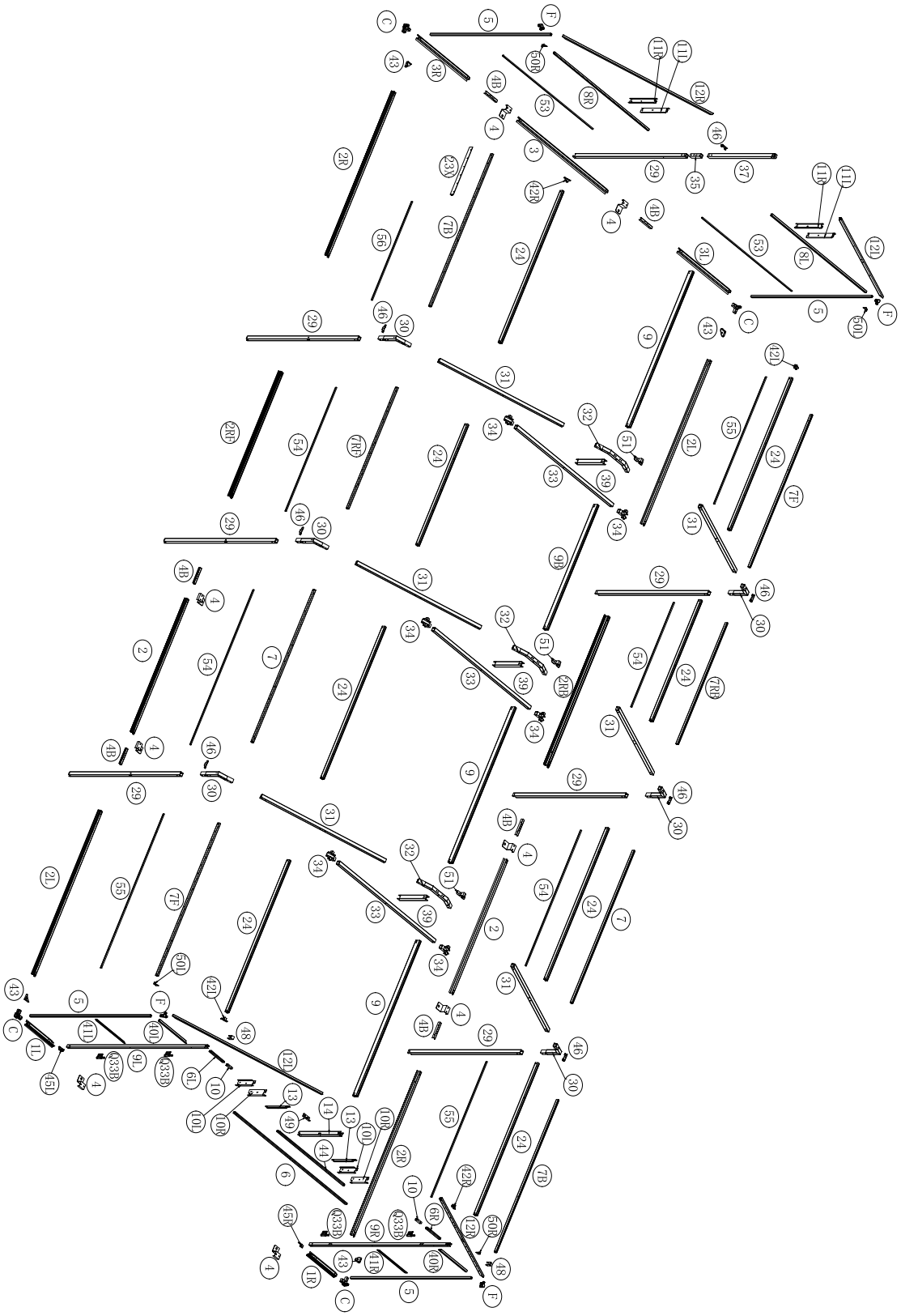

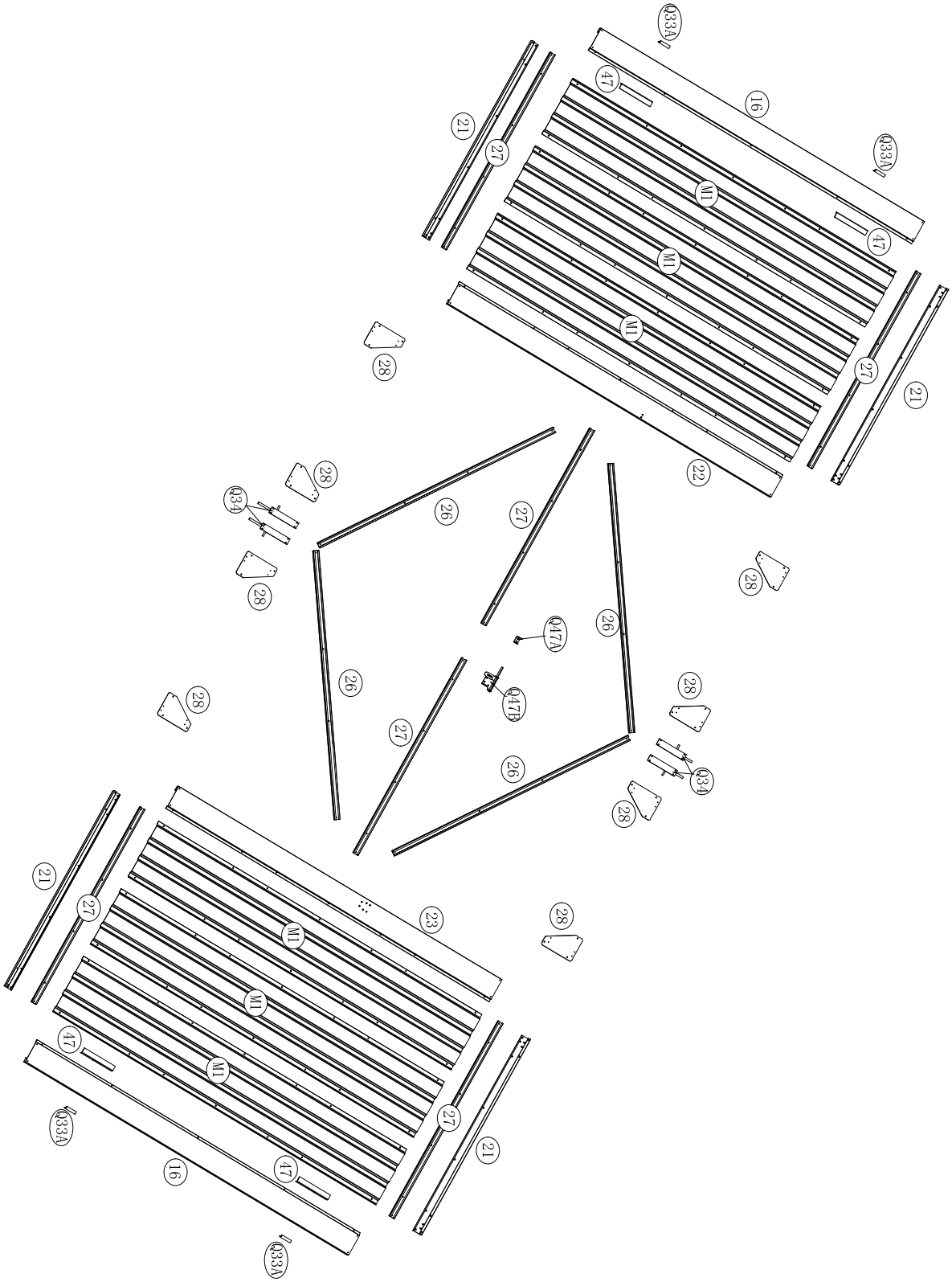
Q33A
47
16
21
27
M1
22
28
Q34
26
Q47A
Q47B
23

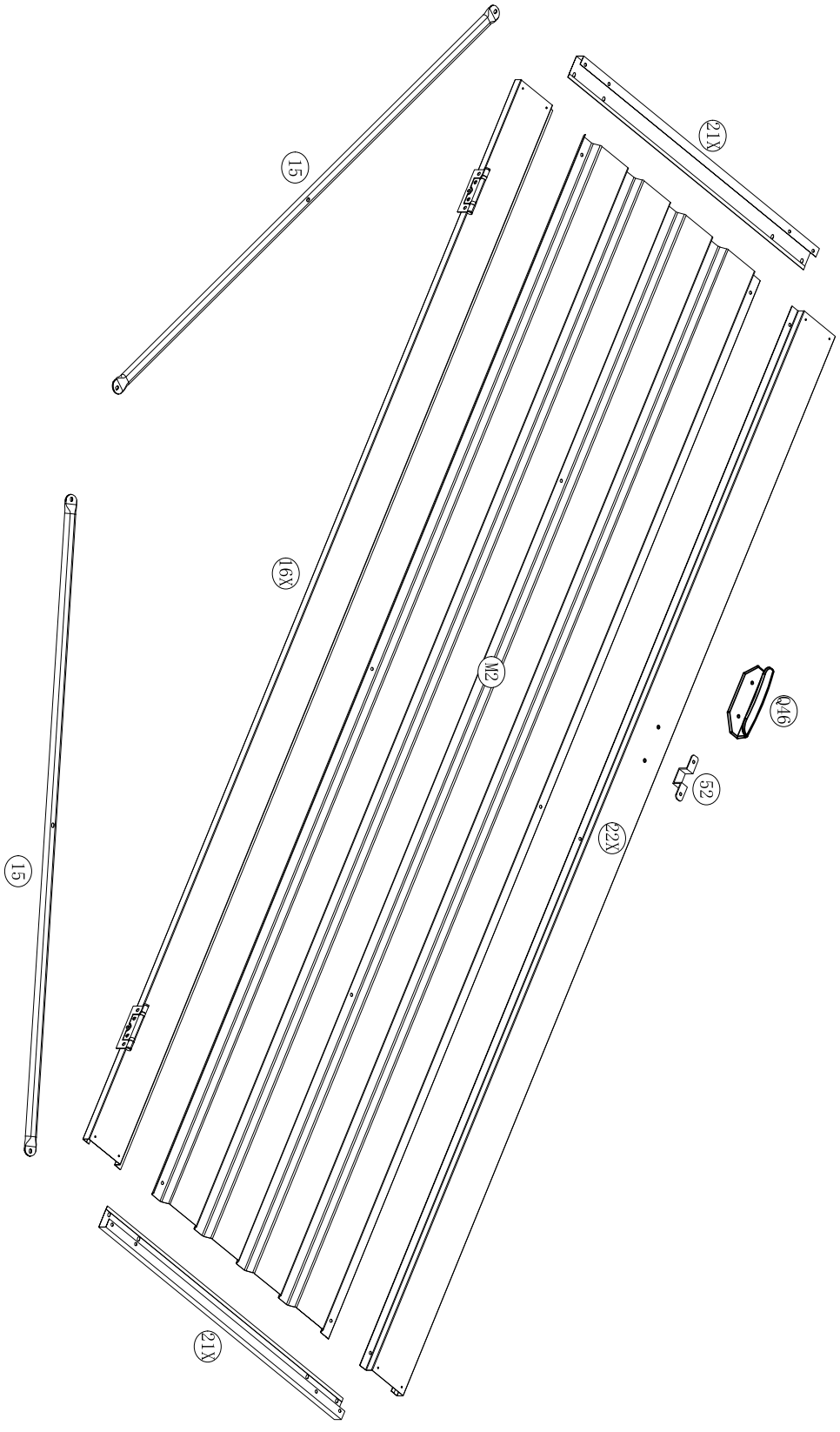
15
21X
19X
M2
Q46
52
22X
15
21X

BOX-A

NO.	PART.	Qty.
1L	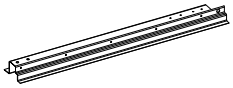	1
1R	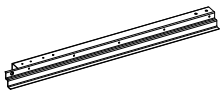	1
2L		2
2R		2
2		2
2RF		1
2RB		1
3L		1
3R		1
3		1
4B	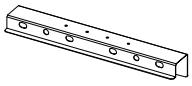	8
6L	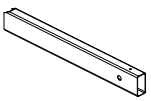	1
6R	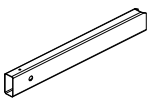	1
6		1
9L		1
9R	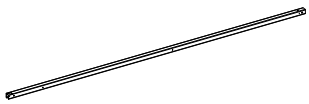	1

NO.	PART.	Qty.
9		3
10L	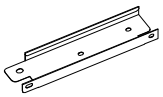	2
10R	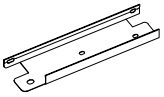	2
11L	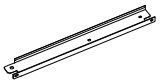	2
11R	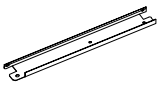	2
15		2
17L		1
17R		1
18L		1
18R	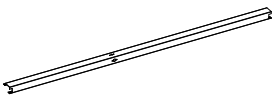	1
24		6
30	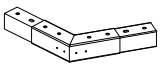	2
35	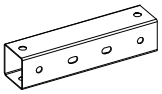	1
53		2
56		1
57	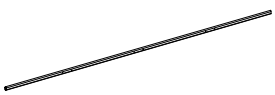	2

BOX-B

NO.	PART.	Qty.
4		10
10	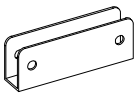	2
29		2
28	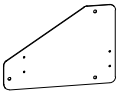	8
30	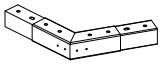	4
31		6
32	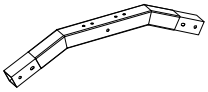	3
33		3
34	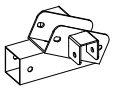	6
38	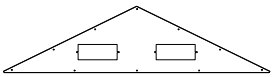	1
38L	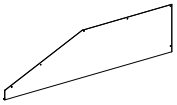	1
38R	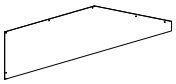	1
41	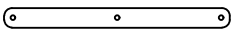	8
42L	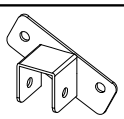	2
42R	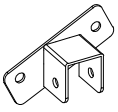	2
43	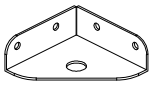	4

NO.	PART.	Qty.
45L	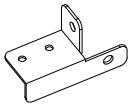	1
45R	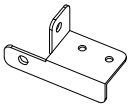	1
46	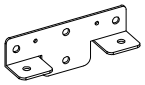	7
47	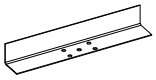	4
48		2
49	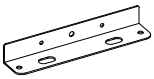	1
50L		2
50R		2
51	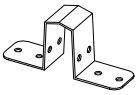	3
52	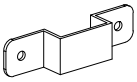	1
F12	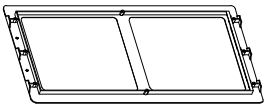	4
F13	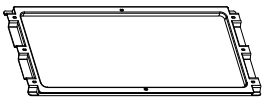	4
F14		4
C	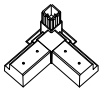	4
F		4
F6	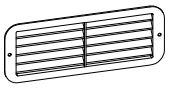	2

BOX-B

NO.	PART.	Qty.
Q1	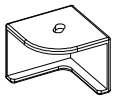	4
Q2	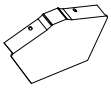	2
Q3		6
Q4	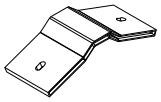	5
Q33A	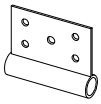	4
Q33B	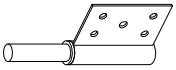	4
Q34	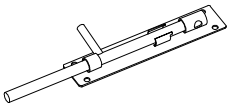	4
Q35	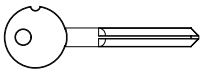	1
Q35A		1
Q35B	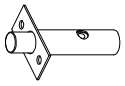	1
Q35C	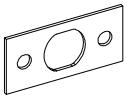	1
Q47A	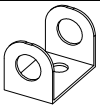	1
Q47B	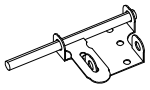	1
Q46	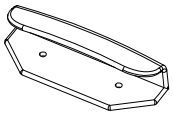	1
Q10		749+20
Q32	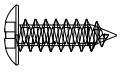	236+20

NO.	PART.	Qty.
Q43	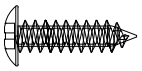	1+1
Q38		24+3
Q49		20+3
Q13		228+10
Q39		40+5
Q40		2+2
Q41		32+5
Q44		8+2
Q45		12+3
Q37		26+3
Q36	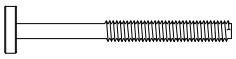	85+5
Q42		74+5
Q54		44+5
Q17		131+10
Q18		676+20
Q19		228+10

BOX-B

NO.	PART.	Qty.
Q20		124+10
Q21		14
Q22		2
Q23	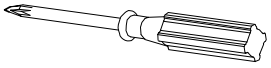	1
Q24		1

NO.	PART.	Qty.
Q25	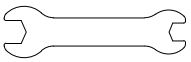	1
Q26		1
Q27	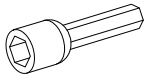	1
S15	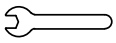	1

BOX-C

NO.	PART.	Qty.
14	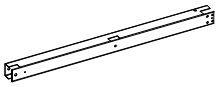	1
16		2
16X		1
19		4
19L		1
19R		1
19F		1
19B		1
20L	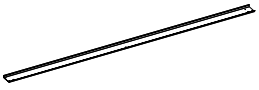	2
20R	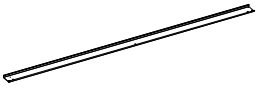	2
21		4
21X		2

NO.	PART.	Qty.
22	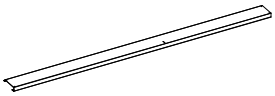	1
22X		1
23	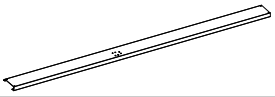	1
23X	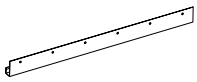	1
24B		2
37	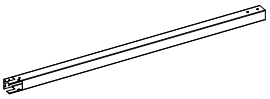	1
54		2
55		3
W7		4
W3		11
M1		6

BOX-D

NO.	PART.	Qty.
D4		25

NO.	PART.	Qty.

BOX-E

NO.	PART.	Qty.
18	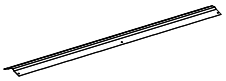	4
18F	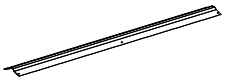	1
18B		1

NO.	PART.	Qty.
W5	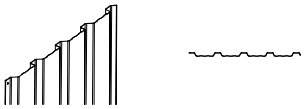	19
C2	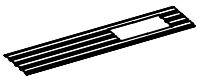	4
M2		1

BOX-F

NO.	PART.	Qty.
5		4
7		2
12L		2

NO.	PART.	Qty.
12R		2
29		5
D4		13

BOX-G

NO.	PART.	Qty.
7F		2
7B	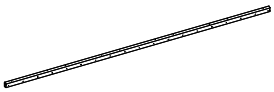	2
7RF	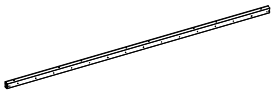	1
7RB	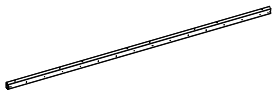	1
8L		1
8R		1
9B		1
13	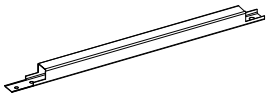	2
26		4
27		6
39	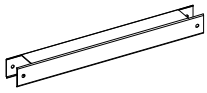	3
40L		1
40R		1
41L	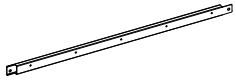	1
41R		1

NO.	PART.	Qty.
44		1
W2	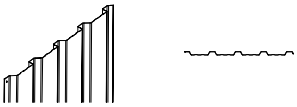	2
W5	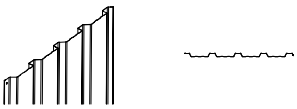	10
W1L	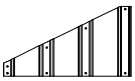	1
W1R	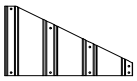	1
W2L		1
W2R		1
W3L	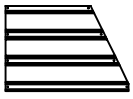	1
W3R	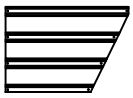	1
W4L	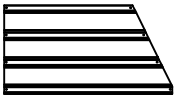	1
W4R	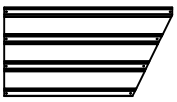	1
W5L	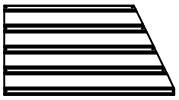	1
W5R	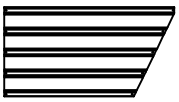	1
W6L	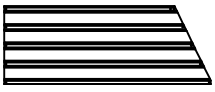	1
W6R		1

INSTALLATION

NO.	PART.	Qty.
2L		1
2R		1
2		1
2RF		1
4		3
4B		3
Q10		12

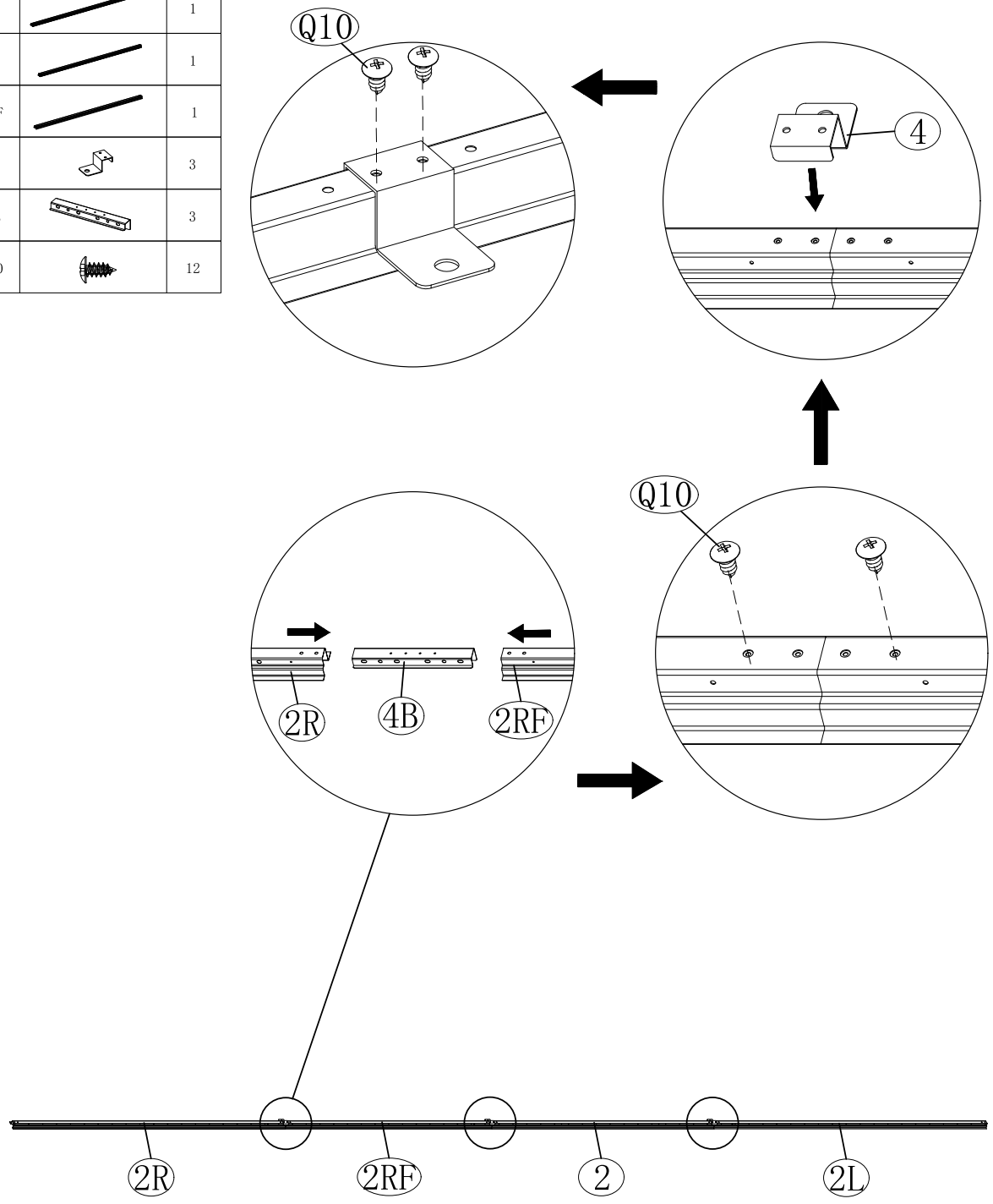

NO.	PART.	Qty.
2L		1
2R		1
2		1
2RB		1
4		3
4B		3
Q10		12

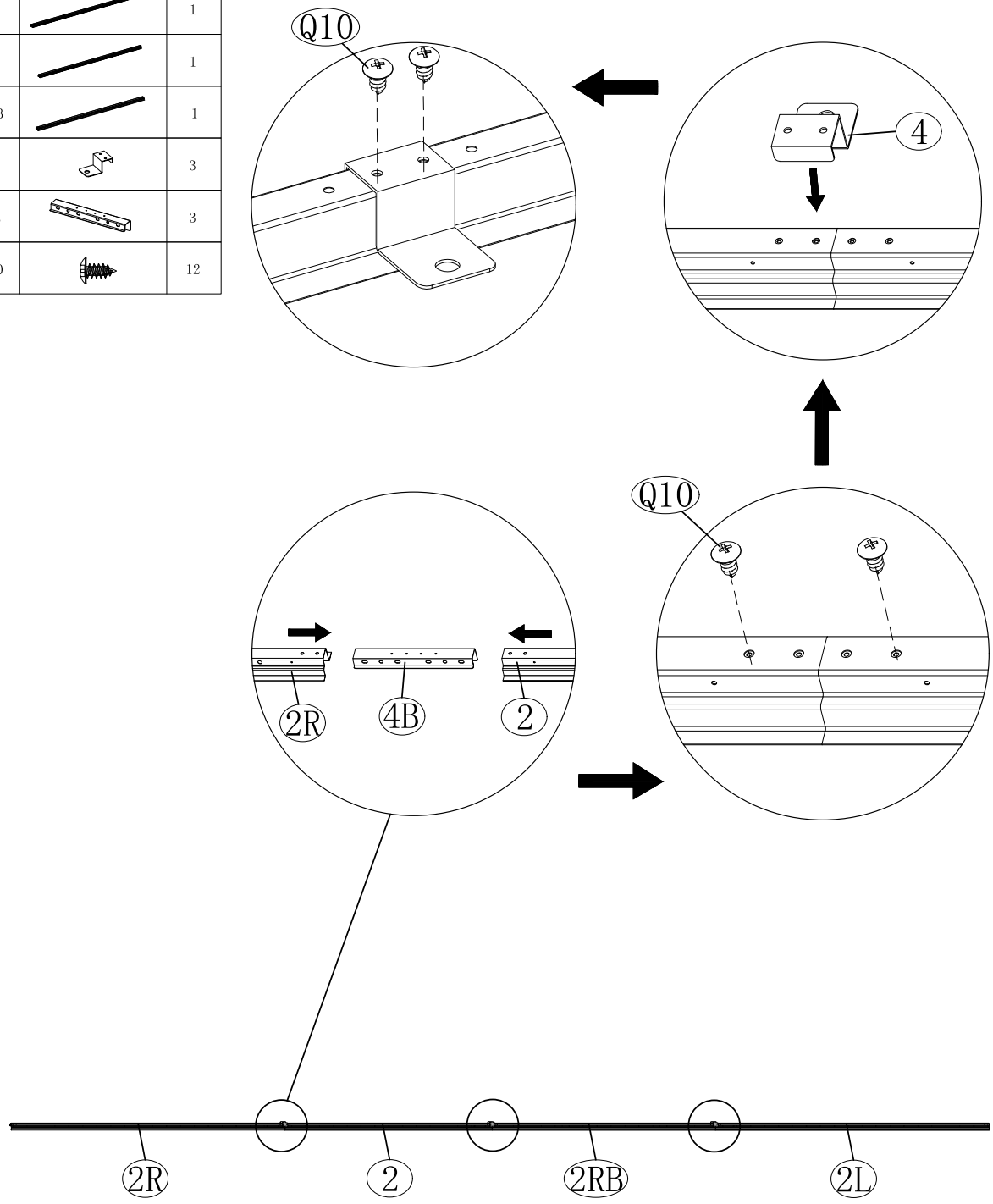

NO.	PART.	Qty.
3L		1
3R		1
3		1
4		2
4B	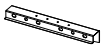	2
Q10		8

NO.	PART.	Qty.
1L		1
1R		1
4		2
43		4
C		4
Q10		36

NO.	PART.	Qty.
33		3
34		6
Q36		6
Q17		6
Q20		6

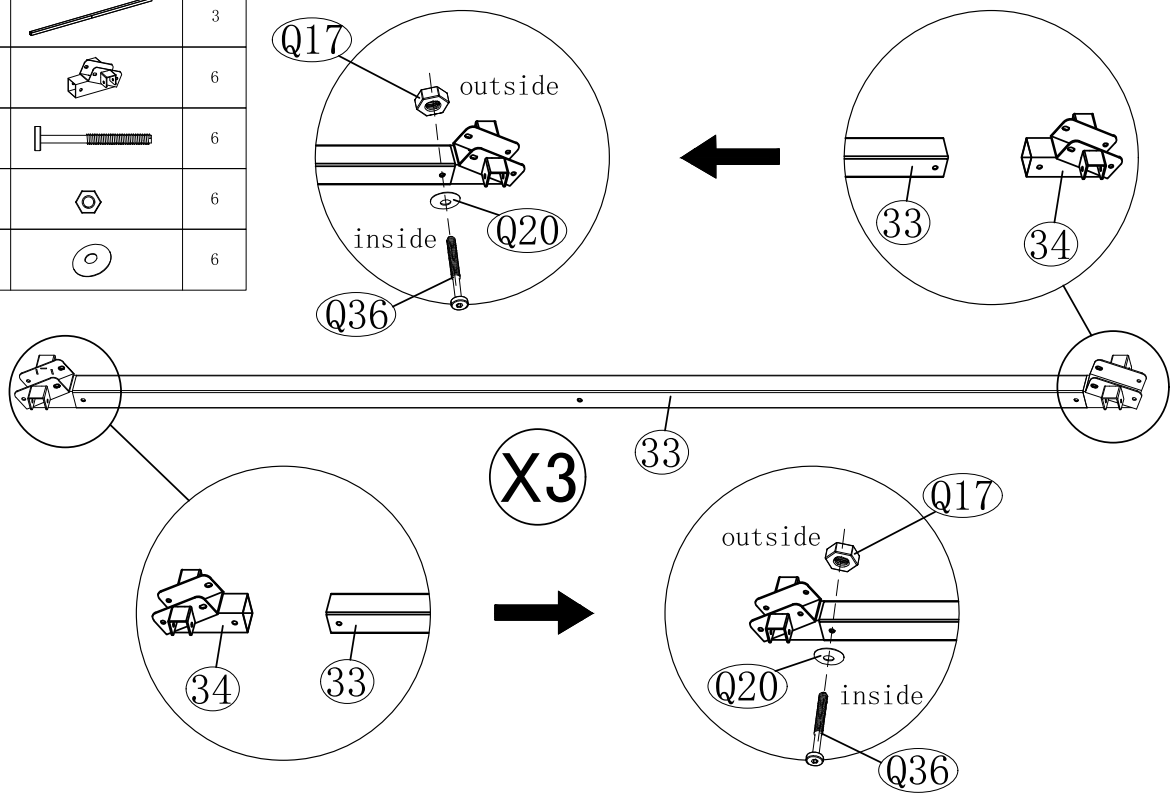

NO.	PART.	Qty.
29	1852mm	6
30		6
46		6
Q10	M4x10mm	12
Q36	M6x50mm	12
Q17	M6	12
Q20		12

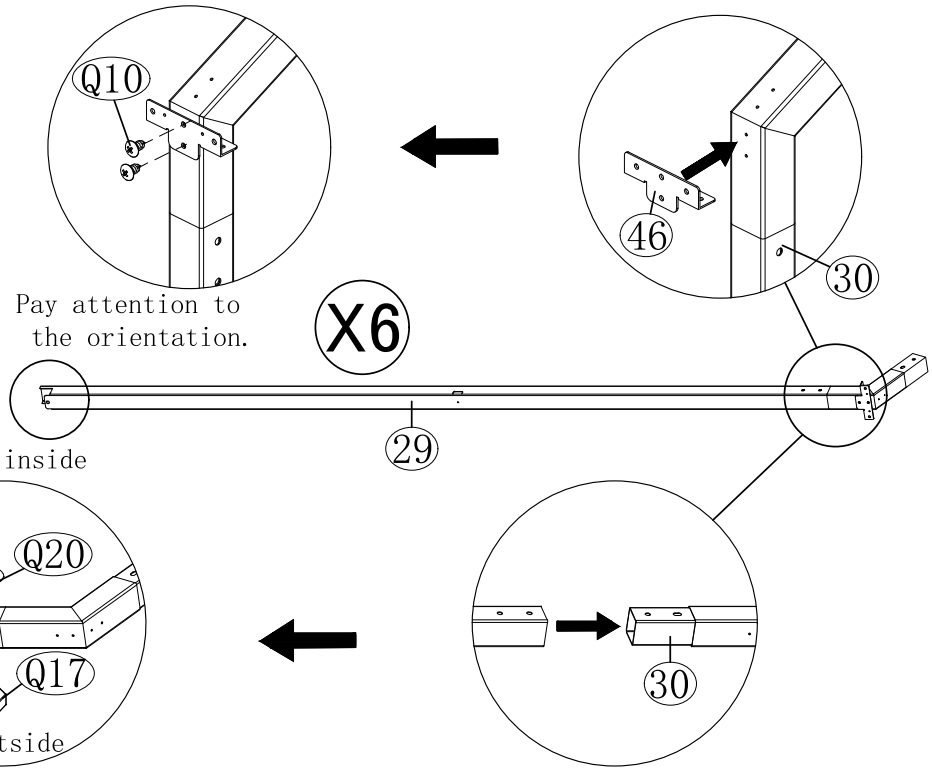

NO.	PART.	Qty.
31		6
32		3
39		3
Q36		30
Q17		30
Q20		30

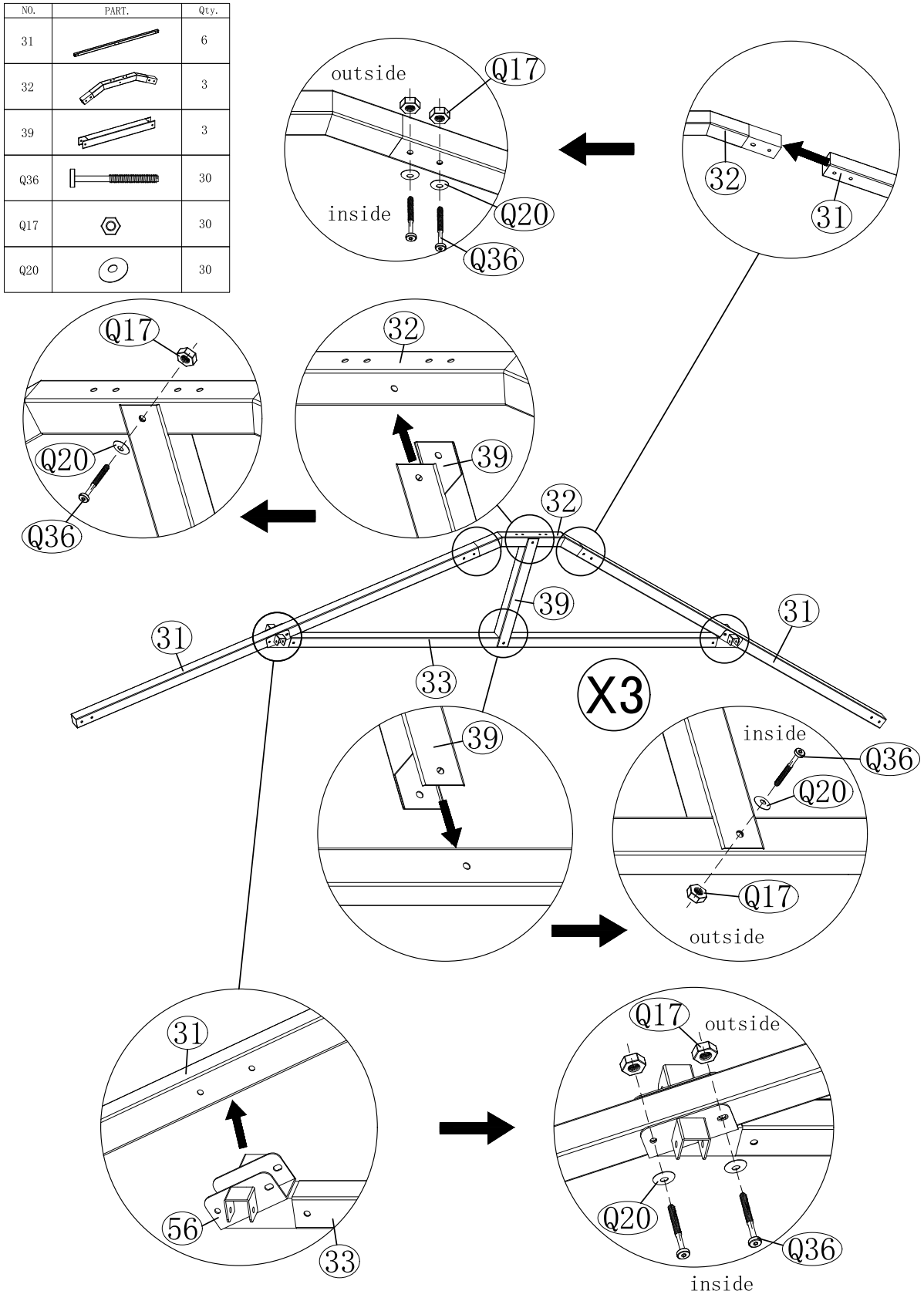

NO.	PART.	Qty.
Q36		12
Q17		12
Q20		12

NO.	PART.	Qty.
Q36		6
Q17		6
Q20		6

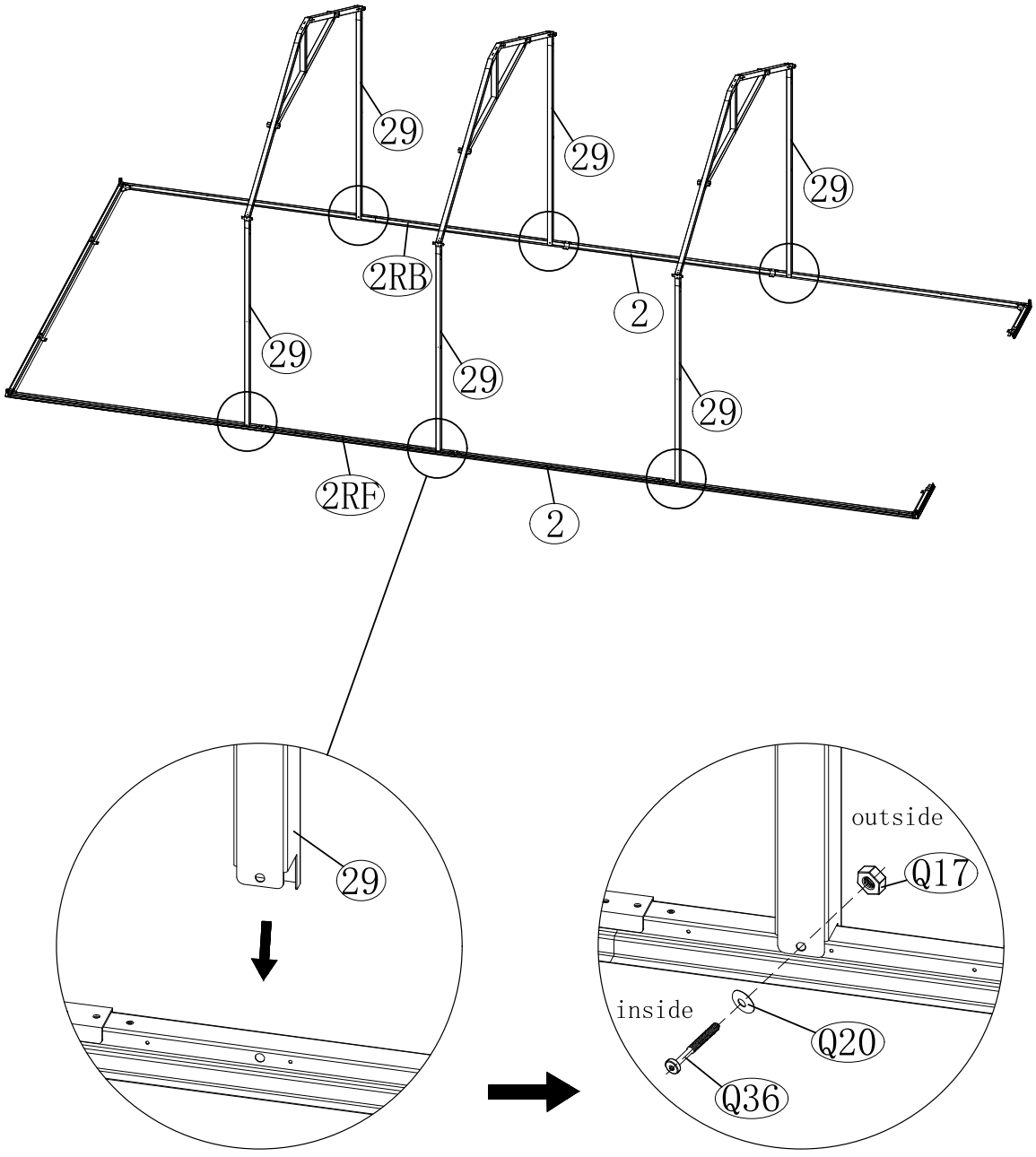

NO.	PART.	Qty.
7		2
7RF		1
7RB		1
24		2
24B		2
Q10		16
Q37		8
Q17		8
Q20		8

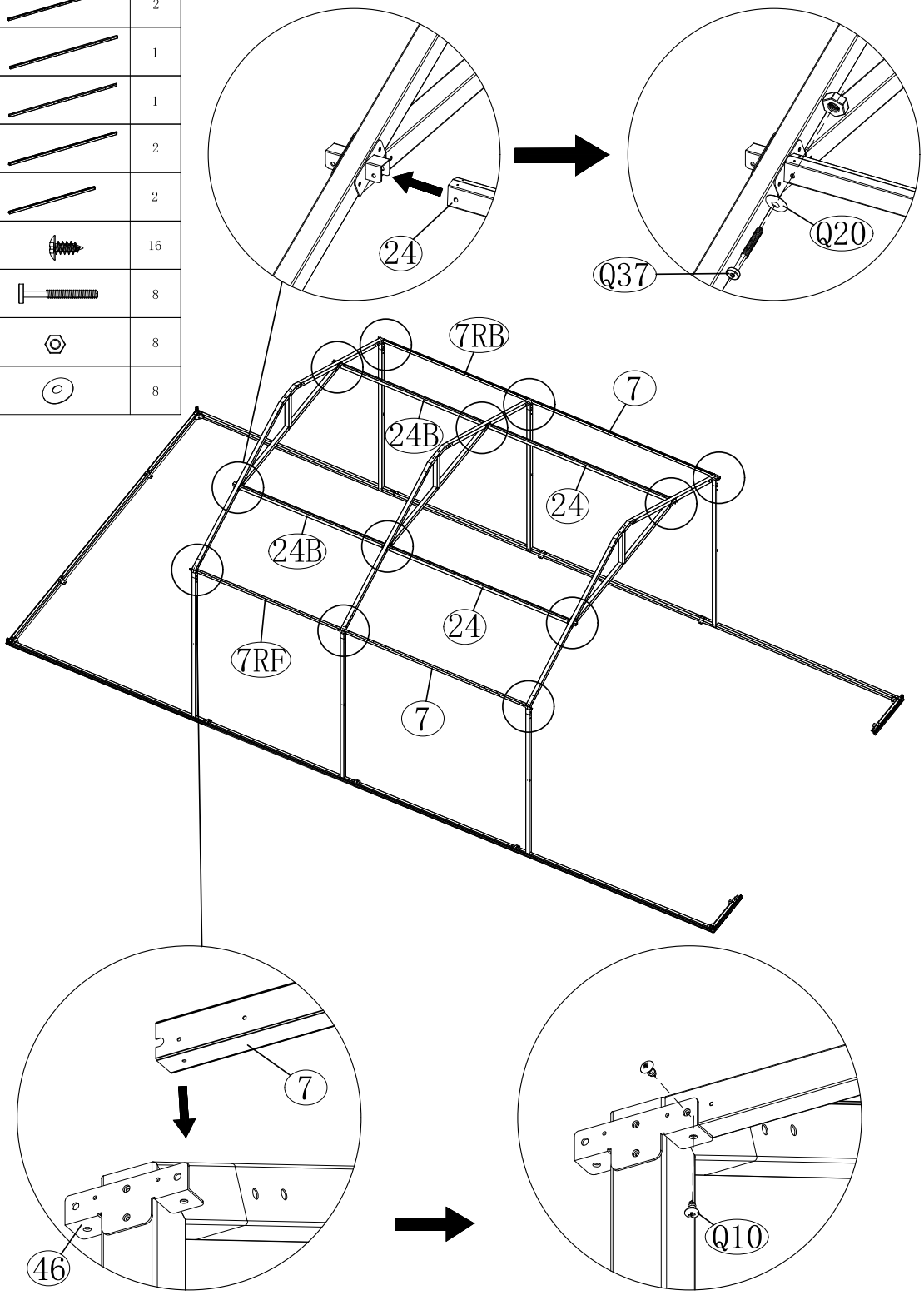

NO.	PART.	Qty.
5		4
F		4
40L		1
40R		1

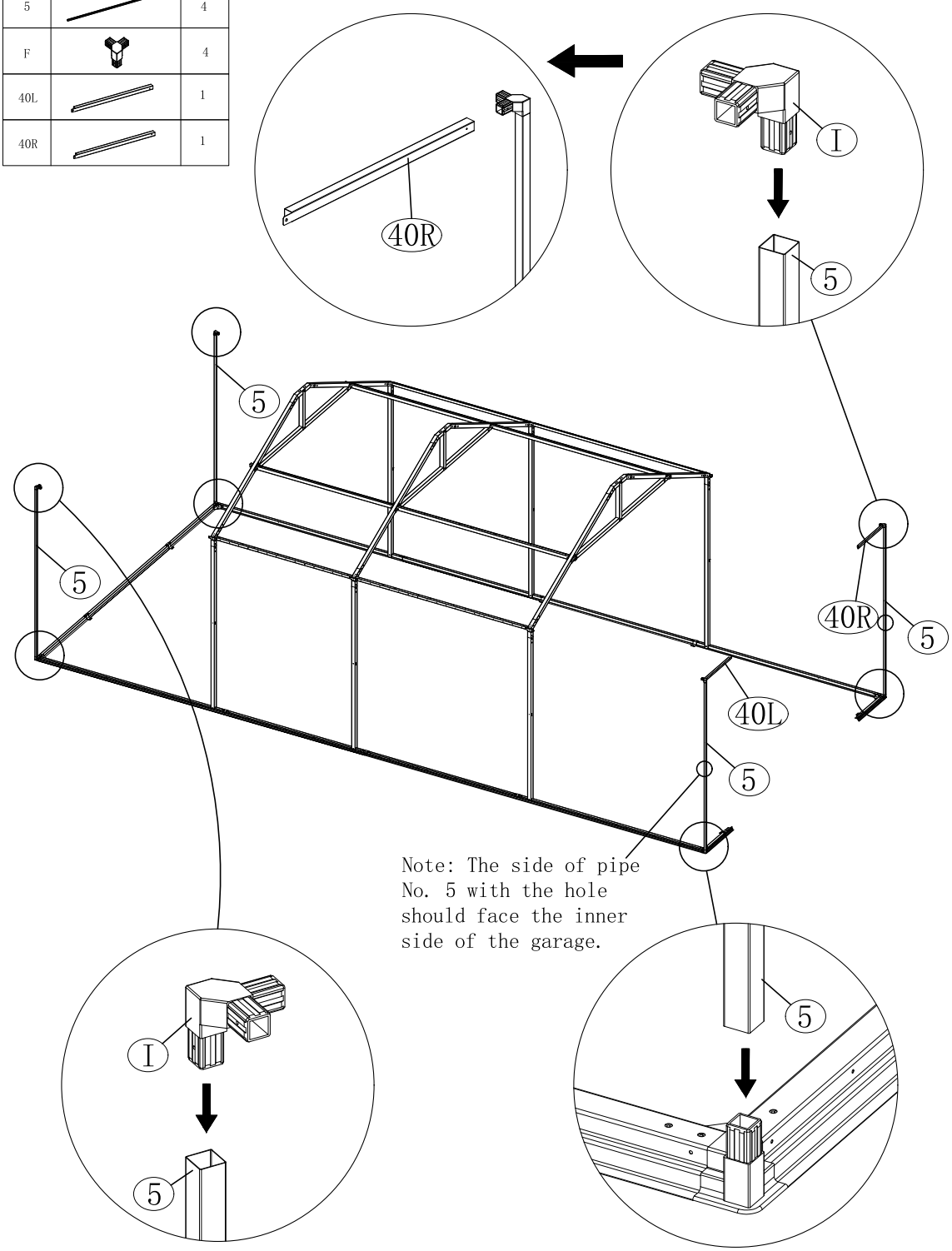

NO.	PART.	Qty.
7F		2
7B		2
Q10		8

NO.	PART.	Qty.
11L		2
11R		2
Q18		2
Q39		2
Q42		2

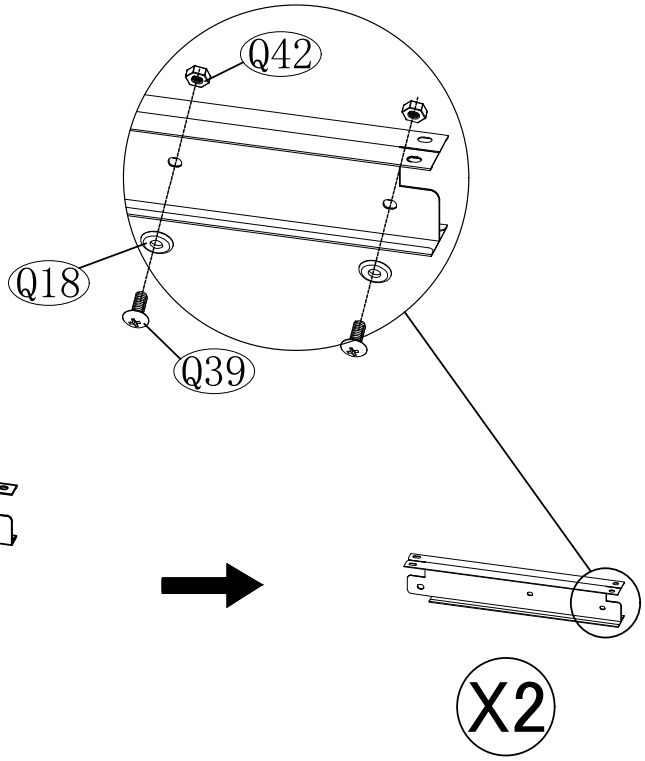

NO.	PART.	Qty.
10L		2
10R		2
Q18		2
Q39	 M4x10mm	2
Q42	 M4	2

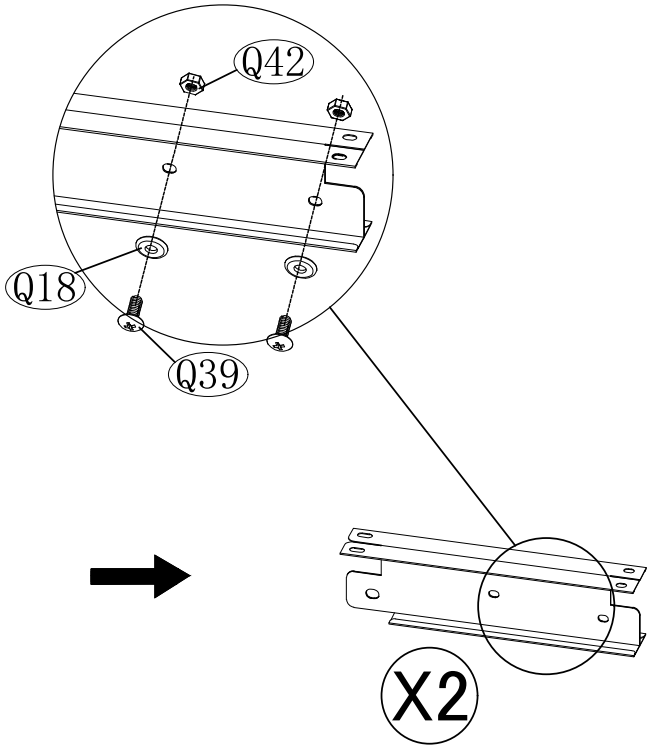

NO.	PART.	Qty.
6L		1
6R		1
6		1
10		2
49		1
Q10		6
Q45		4
Q17		4
Q20		4
Q55		2
Q56		2
Q52		2

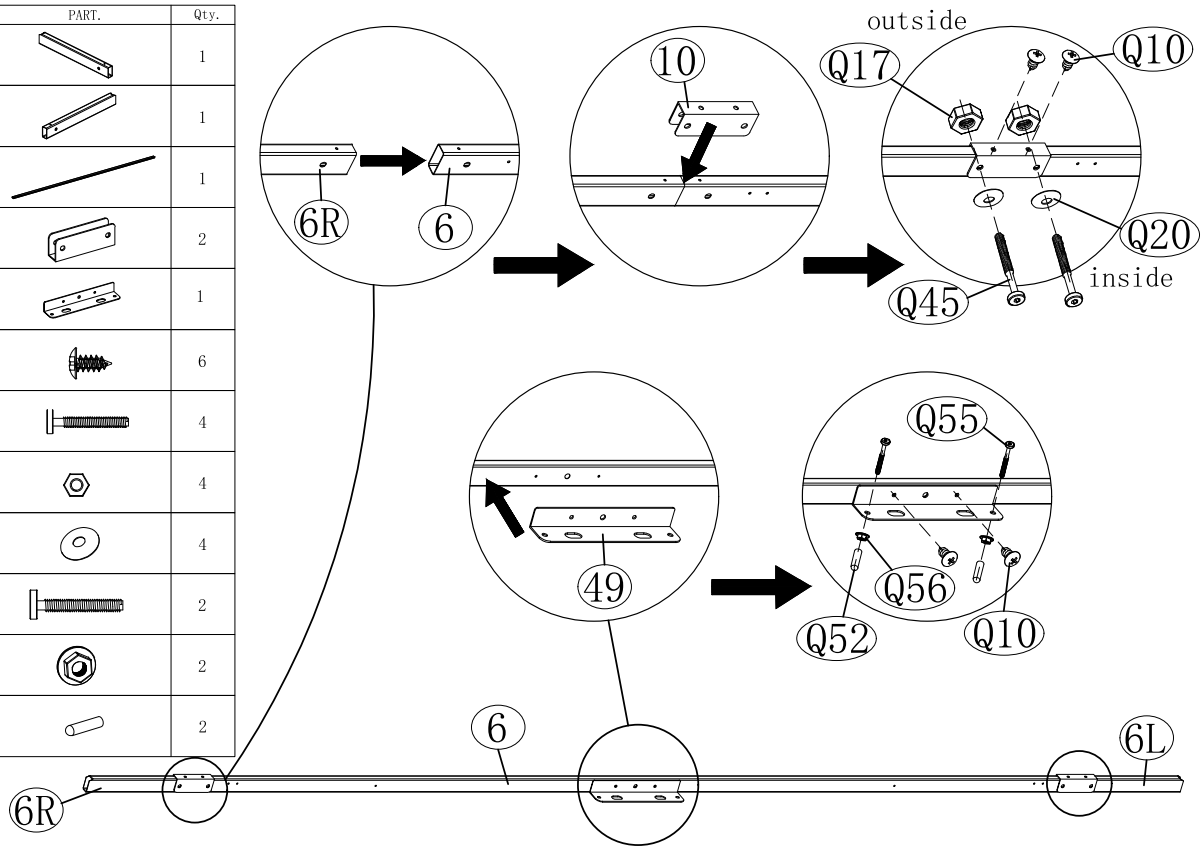

NO.	PART.	Qty.
14		1
44		1
Q10		1

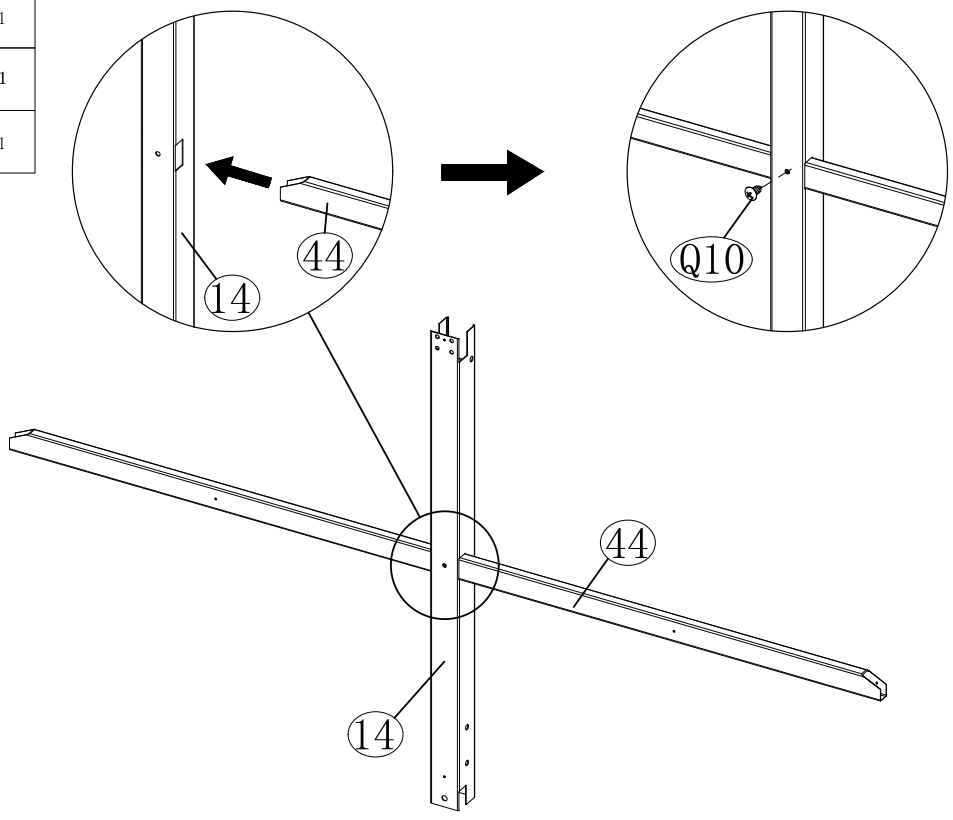

NO.	PART.	Qty.
12L		1
12R		1
48		2
9L		1
9R		1
Q10		10
Q36		1
Q17		1
Q20		1

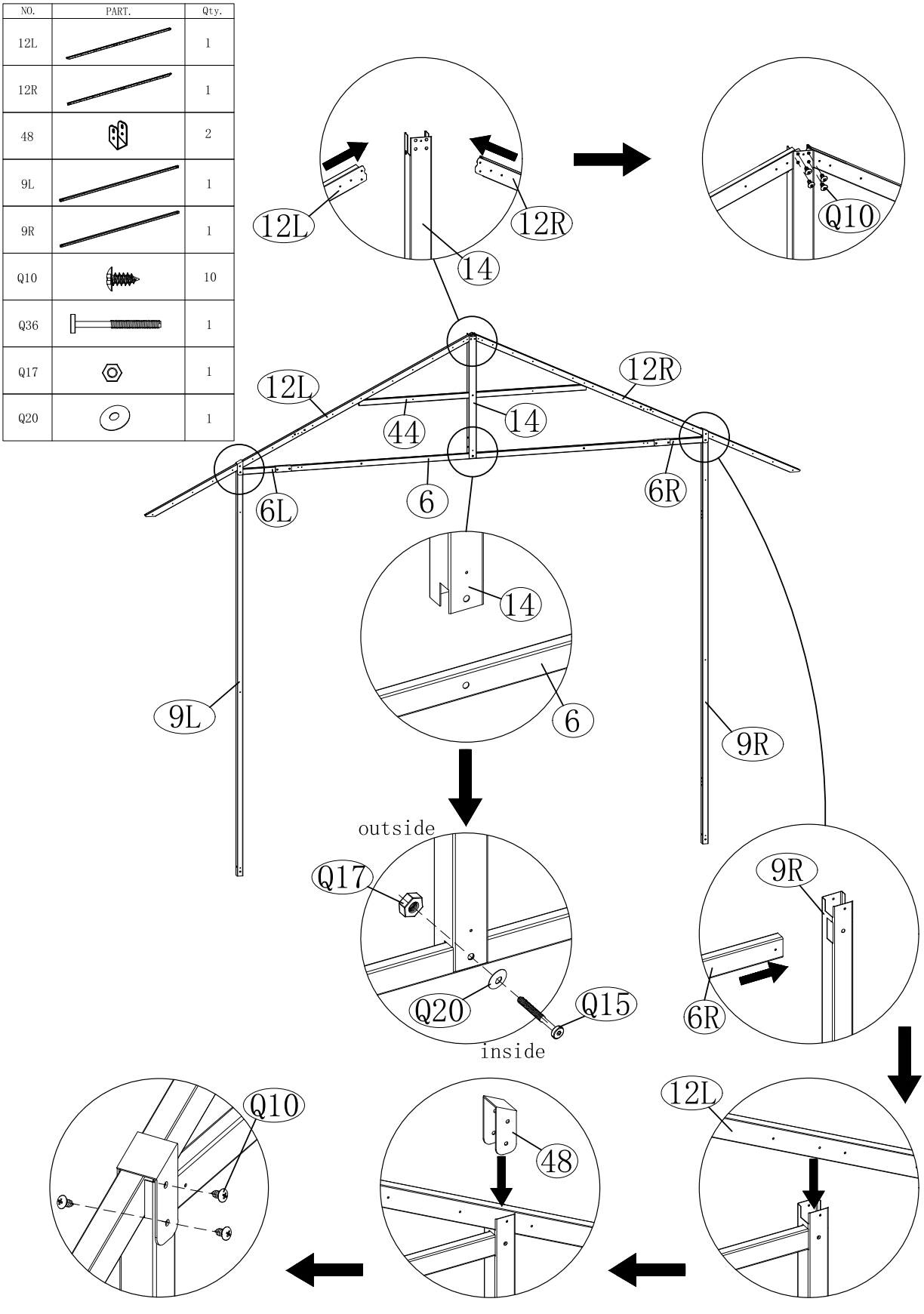

NO.	PART.	Qty.
13	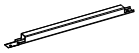	2
42L		1
42R		1
Q10		14
Q45		4
Q17		4
Q20		4

NO.	PART.	Qty.
50L		1
50R		1
45L		1
45R		1
Q10		18
Q37		4
Q17		4
Q20		4

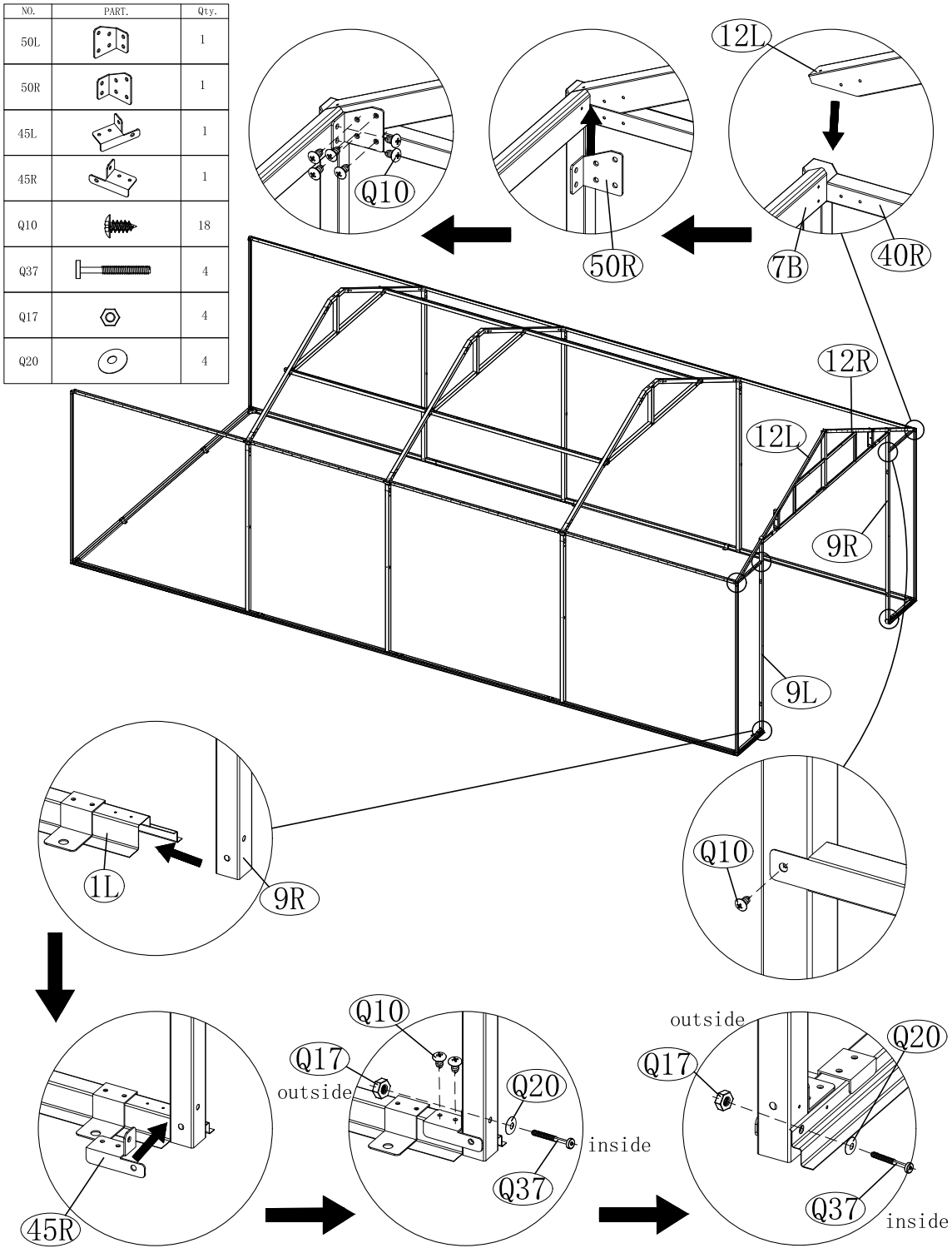

NO.	PART.	Qty.
41L		1
41R		1
Q10		4

NO.	PART.	Qty.
29		1
35		1
37	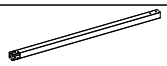	1
46		1
Q10		2
Q36		4
Q17		4
Q20		4

NO.	PART.	Qty.
8L		1
8R		1
50L		1
50R		1
Q10		12
Q43		1
Q20		1

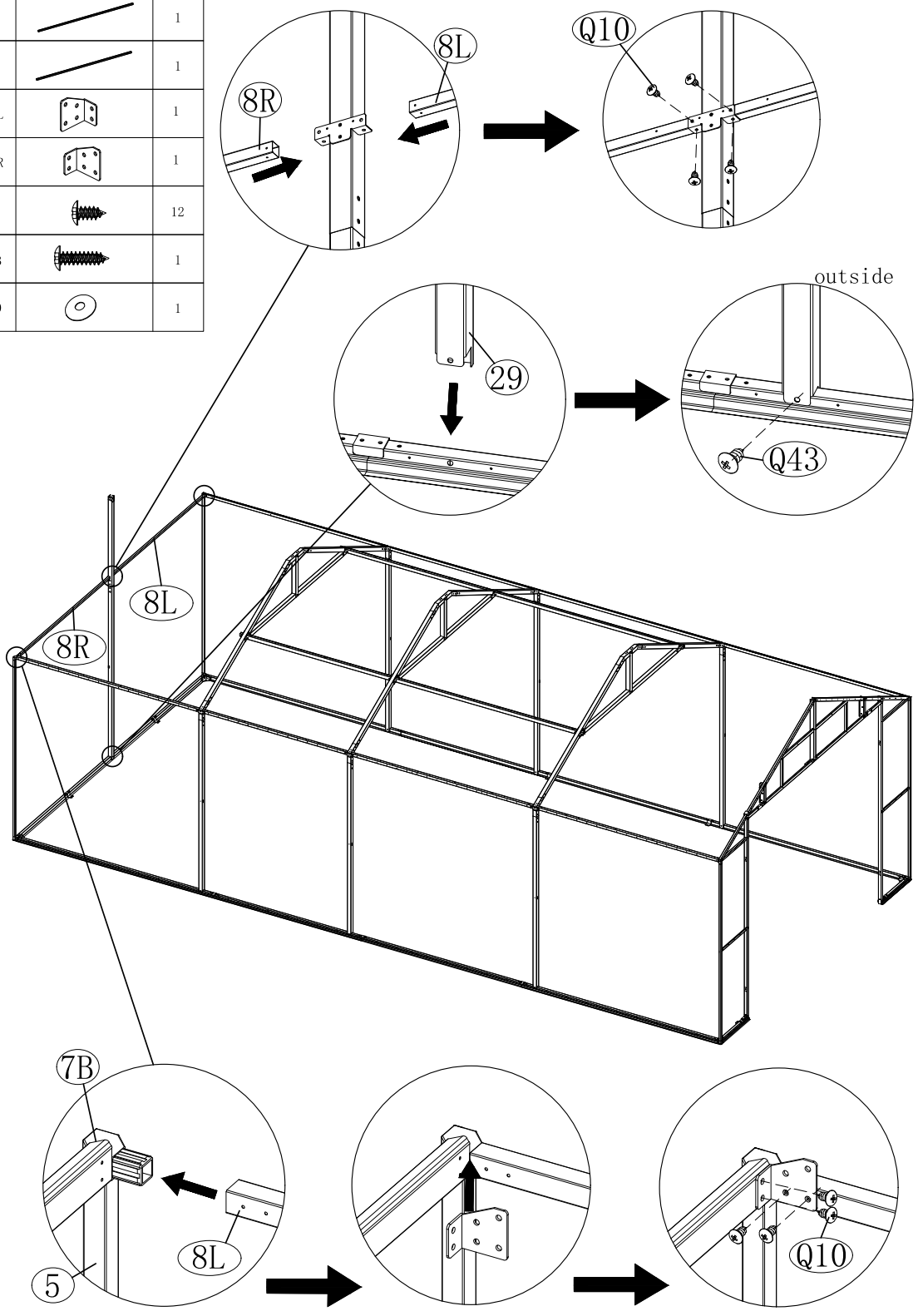

NO.	PART.	Qty.
12L		1
12R		1
Q10		8

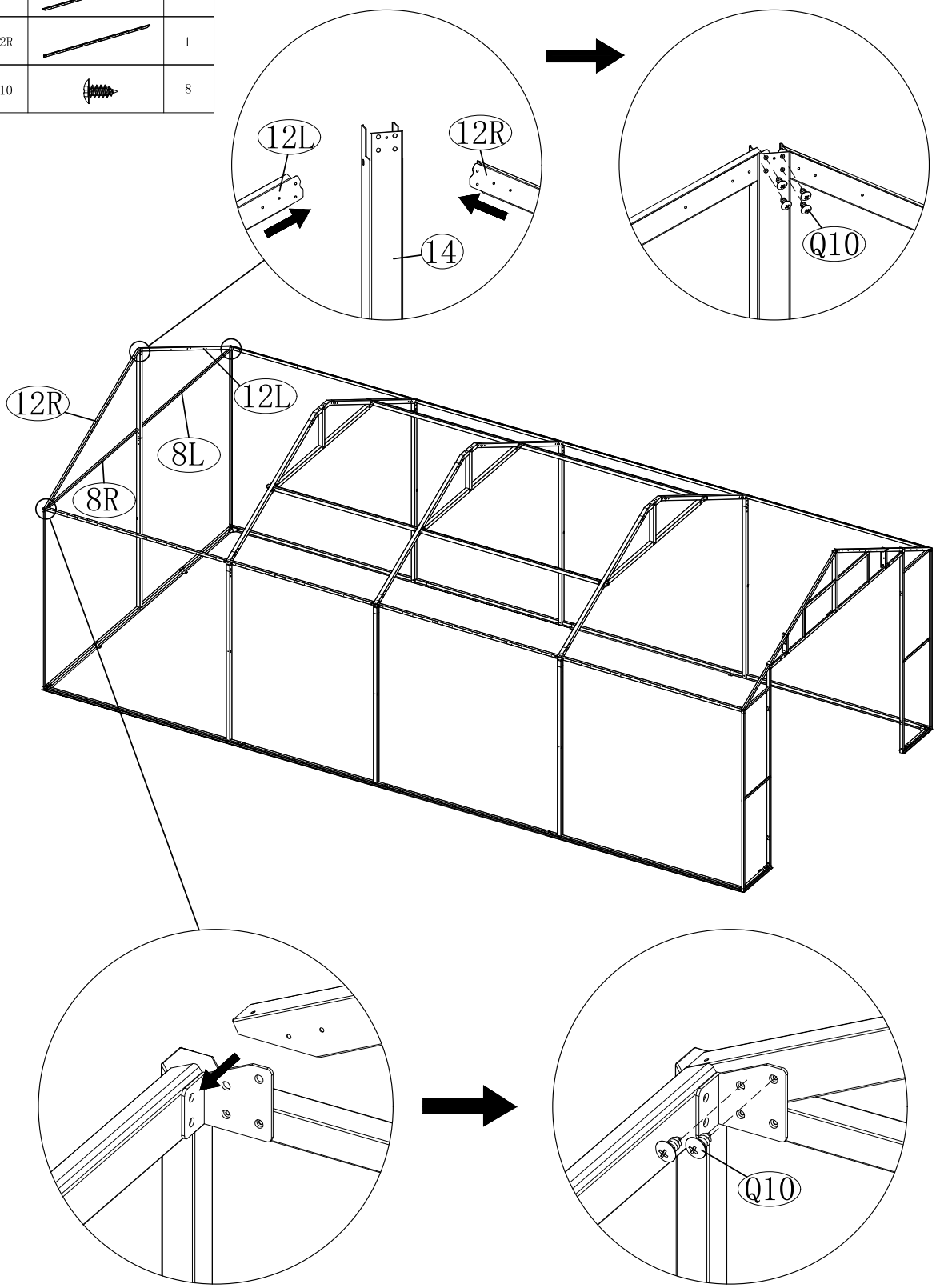

NO.	PART.	Qty.
42L		1
42R		1
Q10		8
Q45		4
Q17		4
Q20		4

NO.	PART.	Qty.
Q37		8
Q17		8
Q20		8

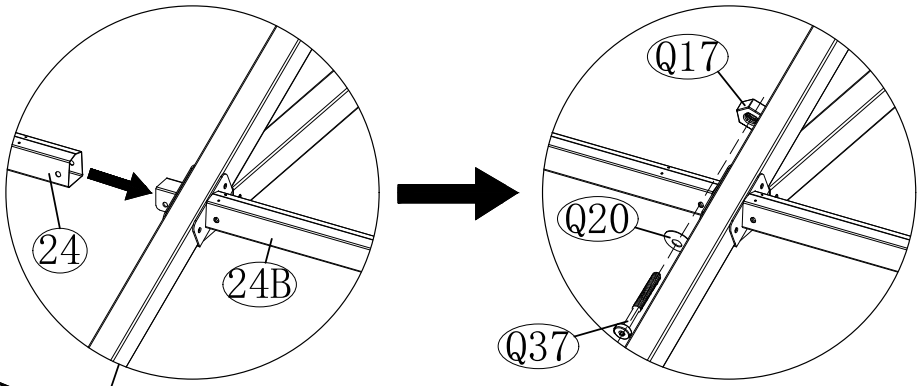

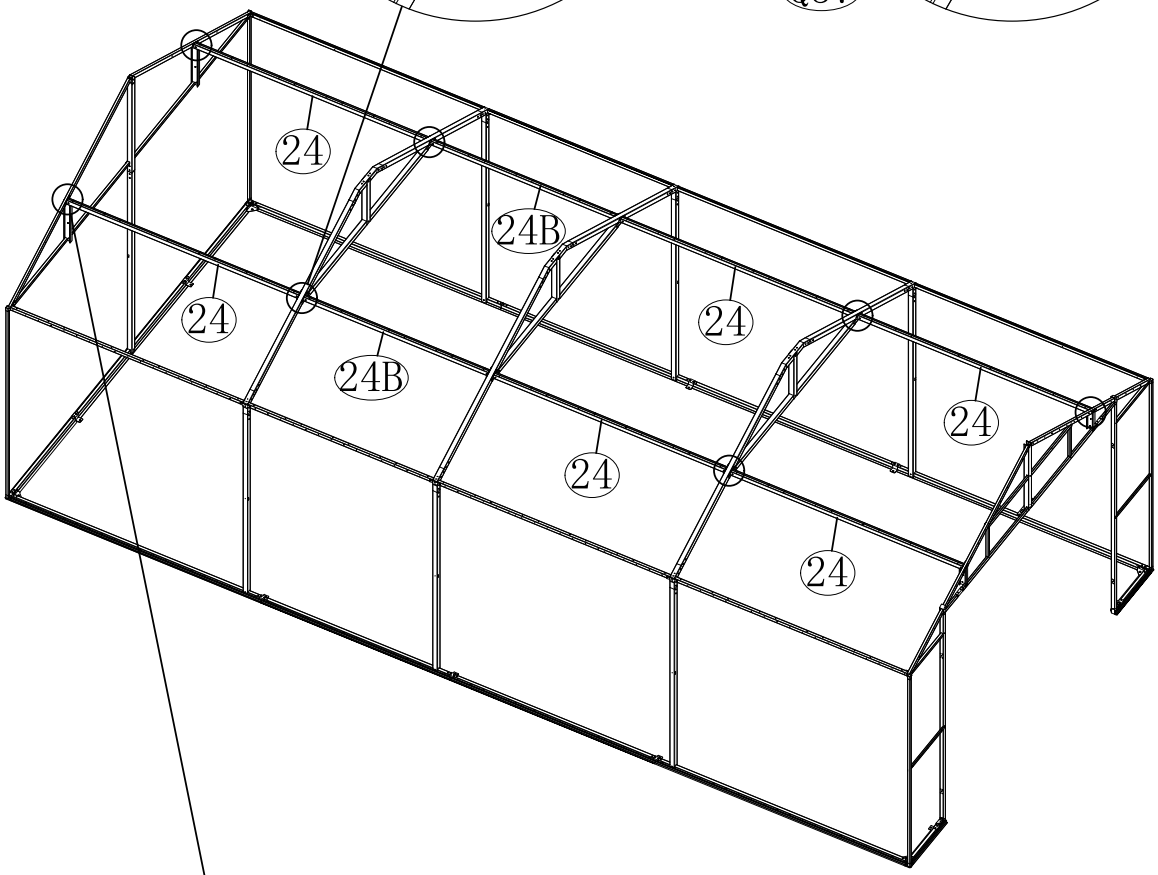

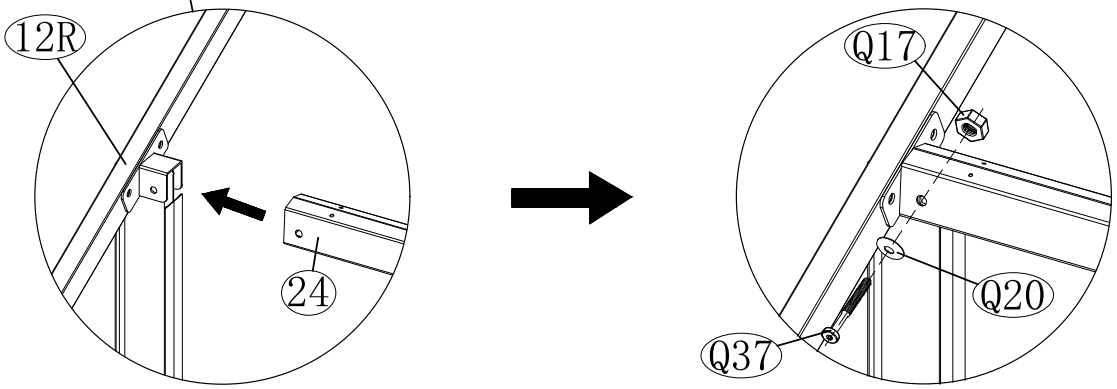

NO.	PART.	Qty.
9		3
9B		1
51		3
Q36		14
Q37		6
Q17		20
Q20		20

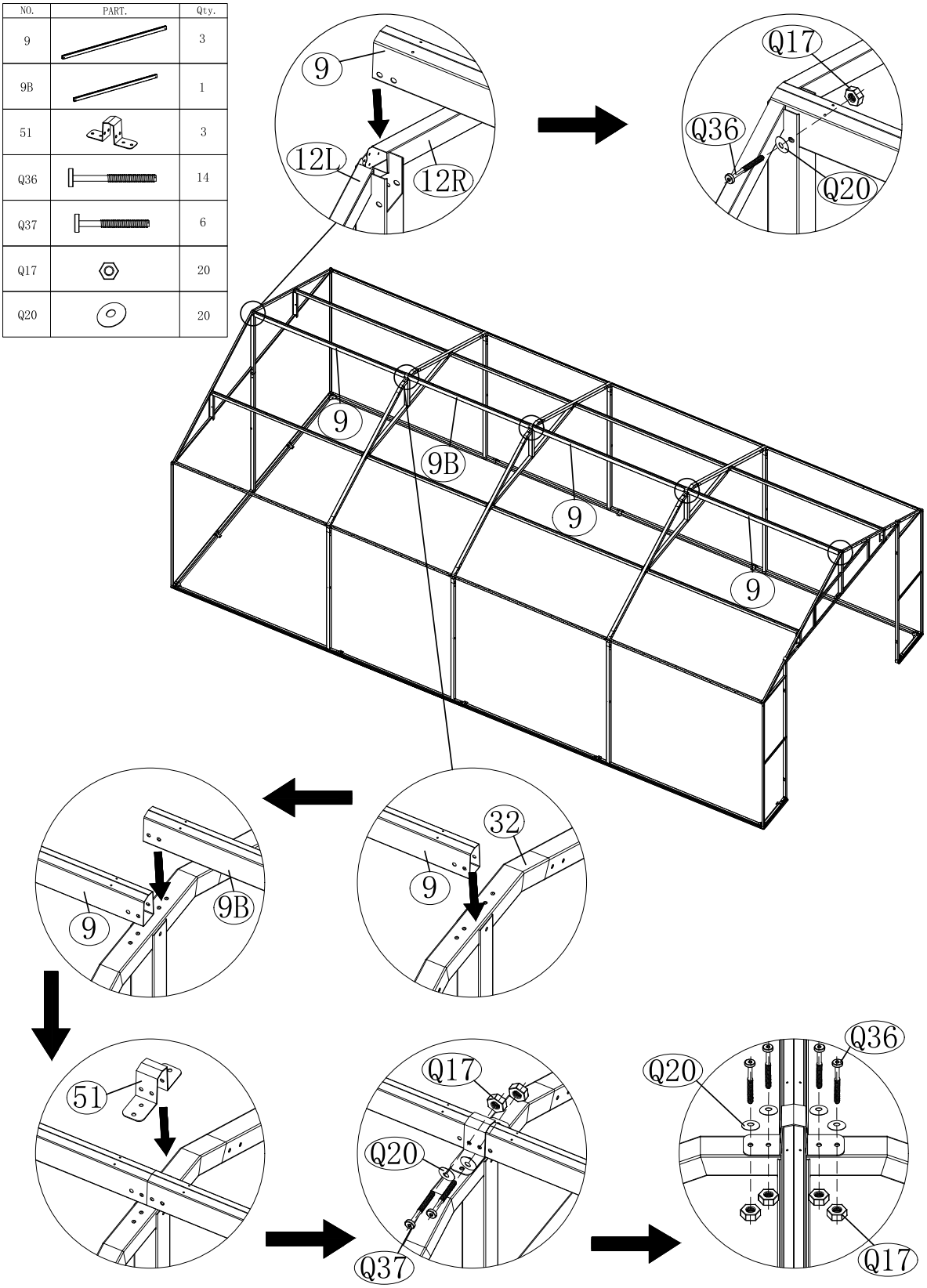

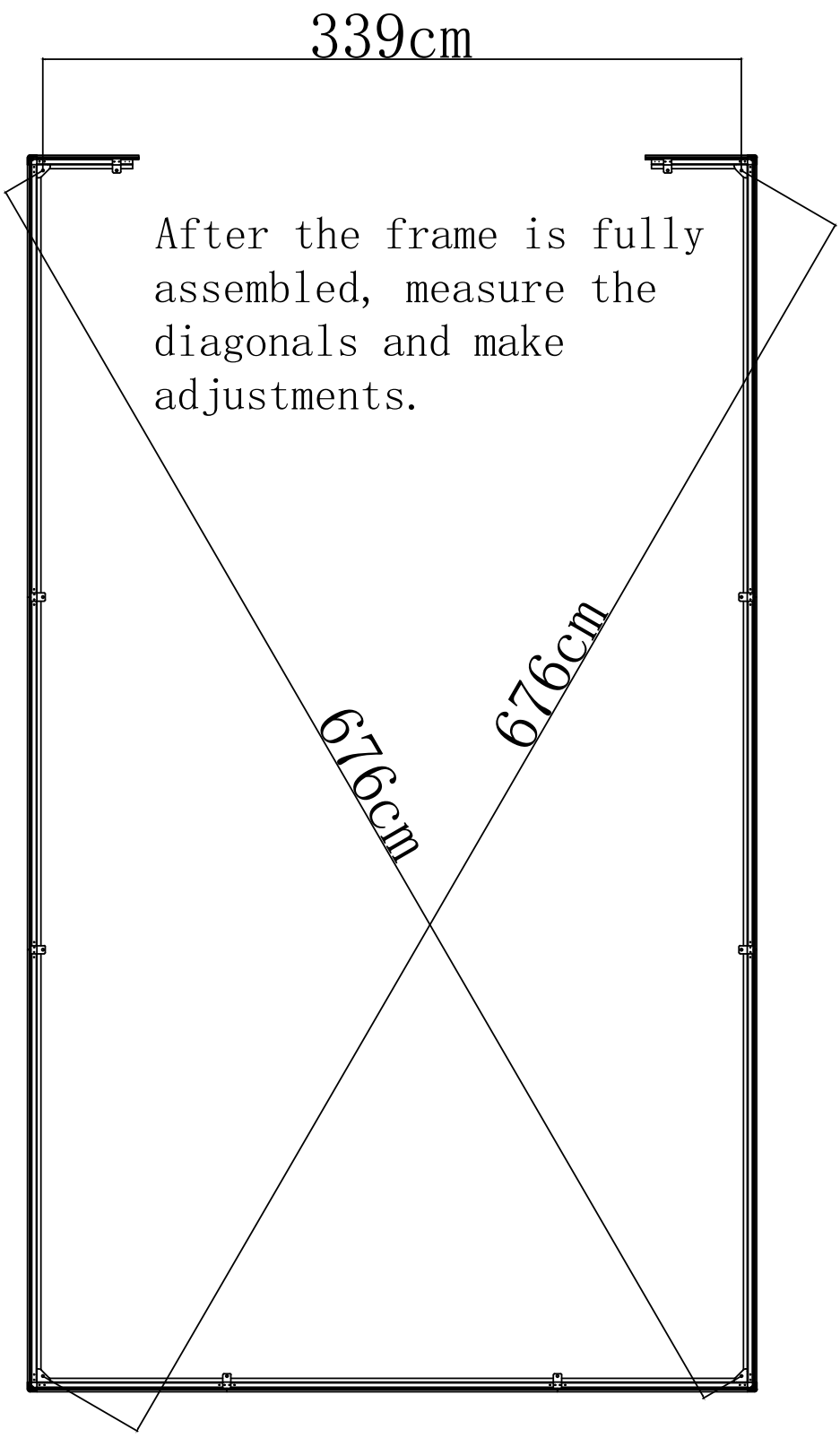
339cm
After the frame is fully assembled, measure the diagonals and make adjustments.
676cm
676cm

NO.	PART.	Qty.
W5	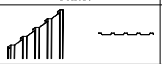	1
Q10		6
Q18		6

NO.	PART.	Qty.
W5	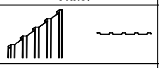	2
Q10		16
Q18		16

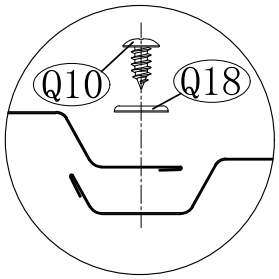

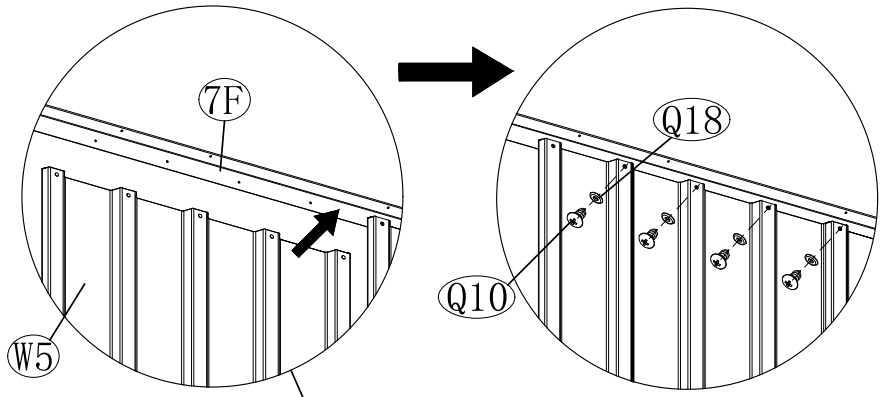

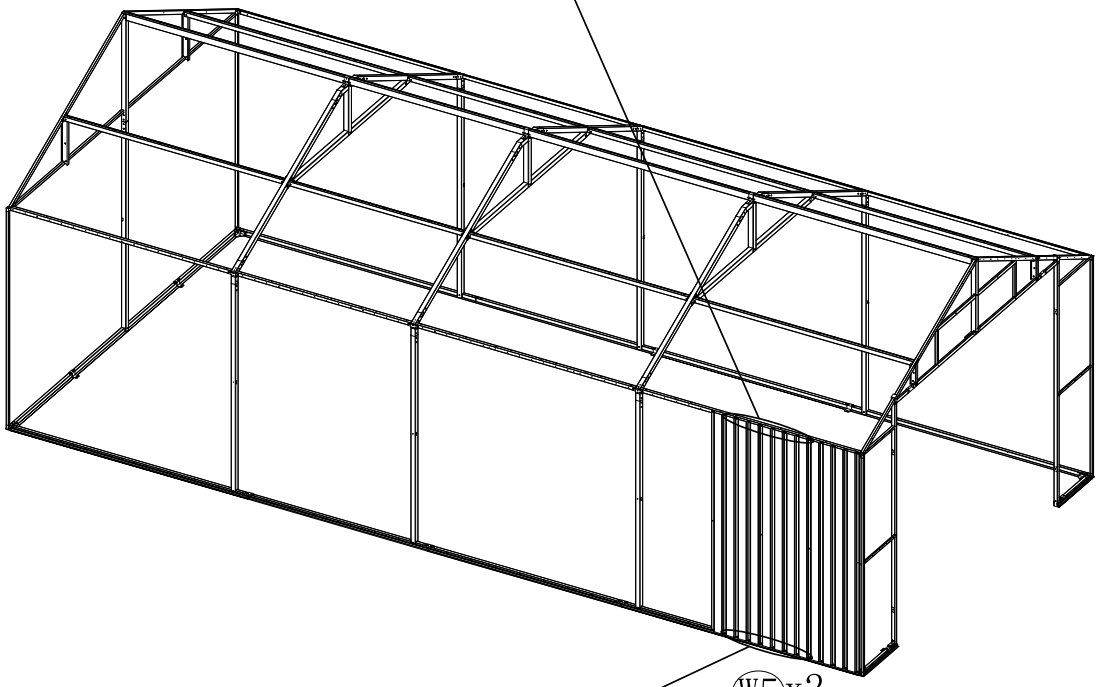

W5x2

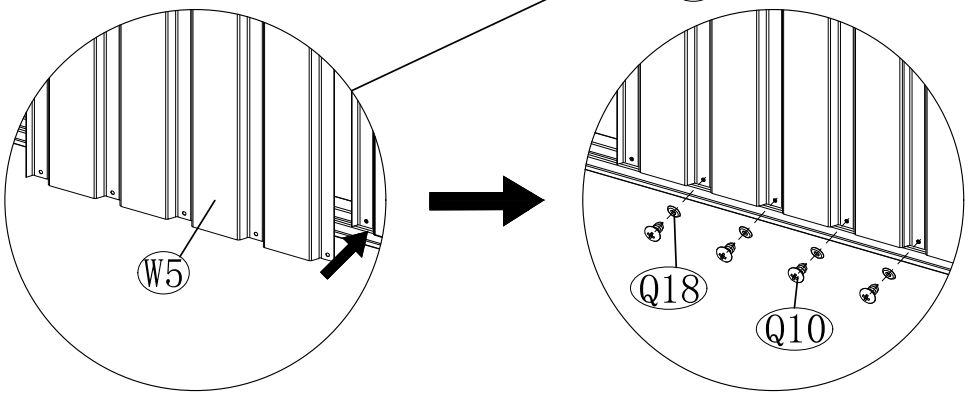

NO.	PART.	Qty.
C2		1
Q10		8
Q18		8

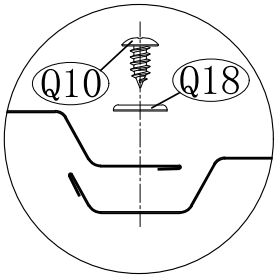

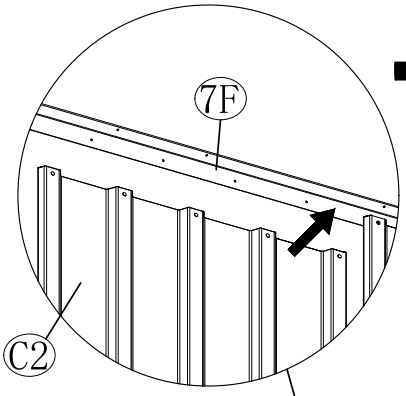

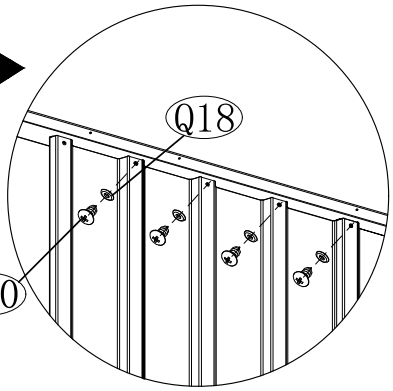

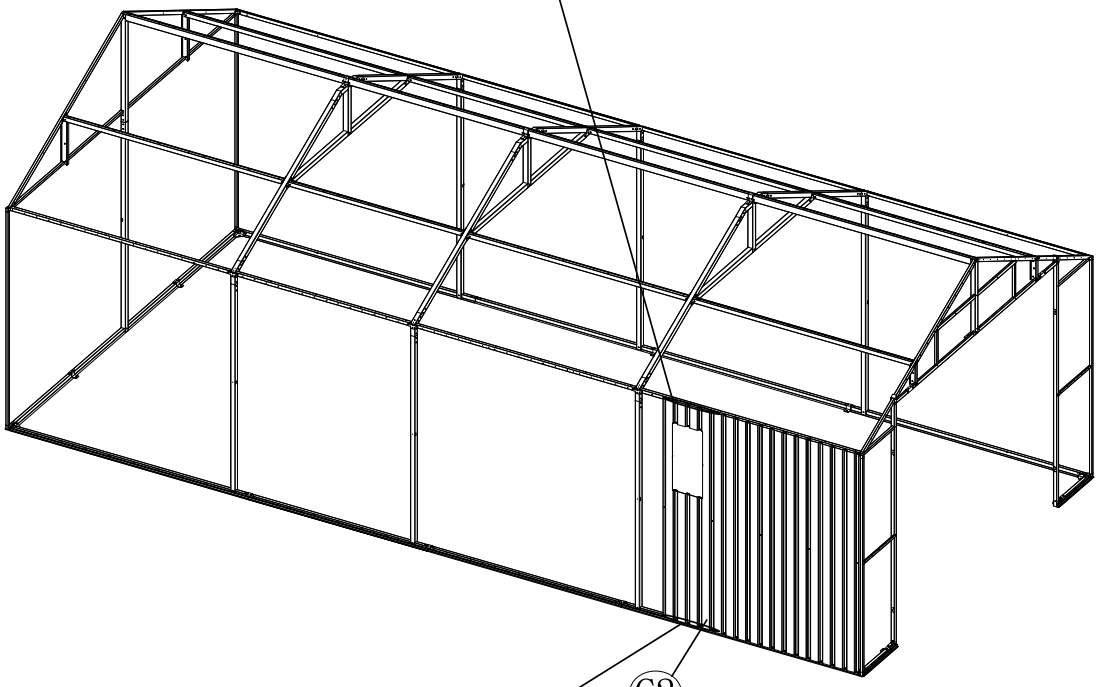

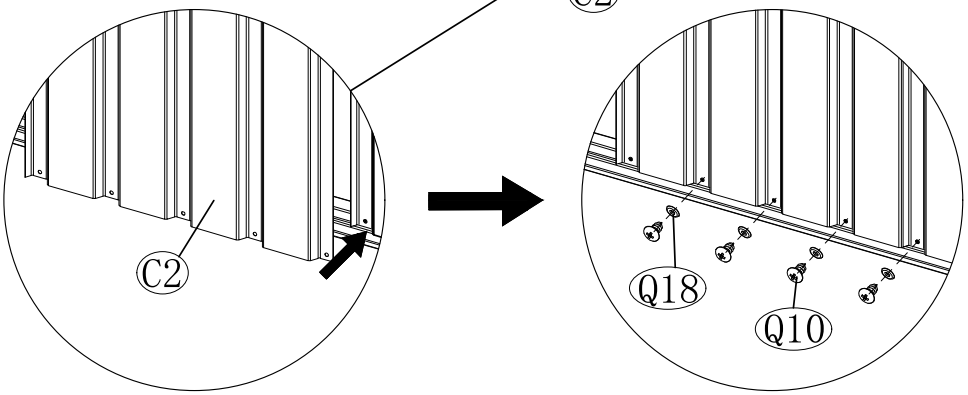

NO.	PART.	Qty.
W5	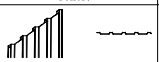	9
Q10		72
Q18		72

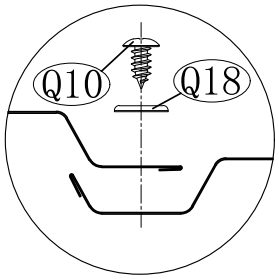

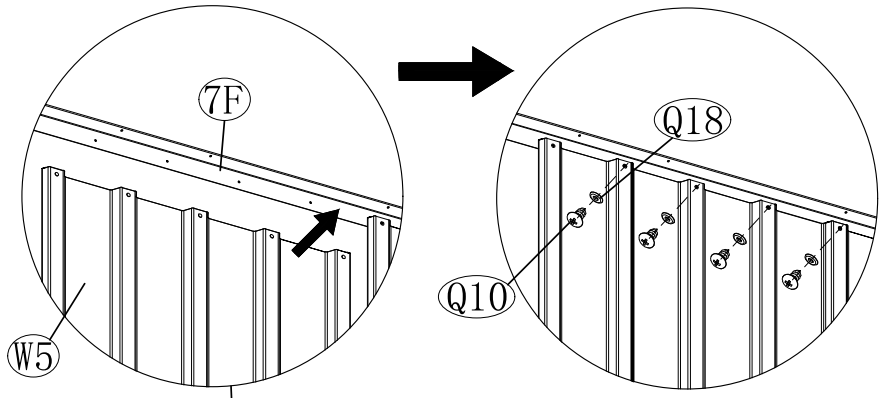

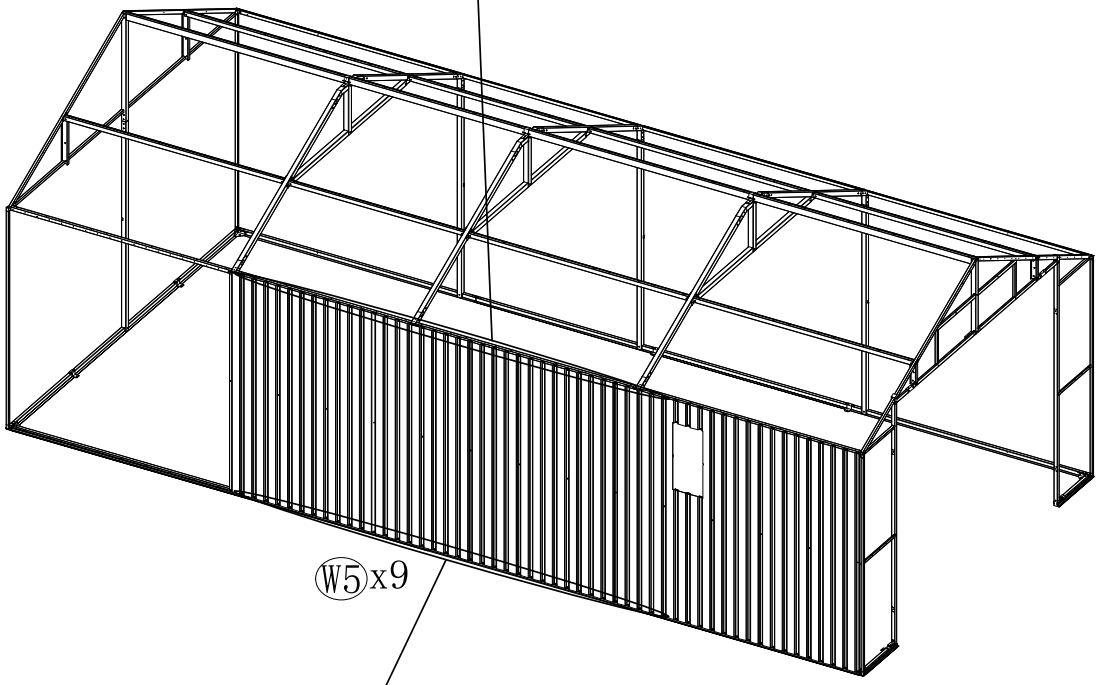

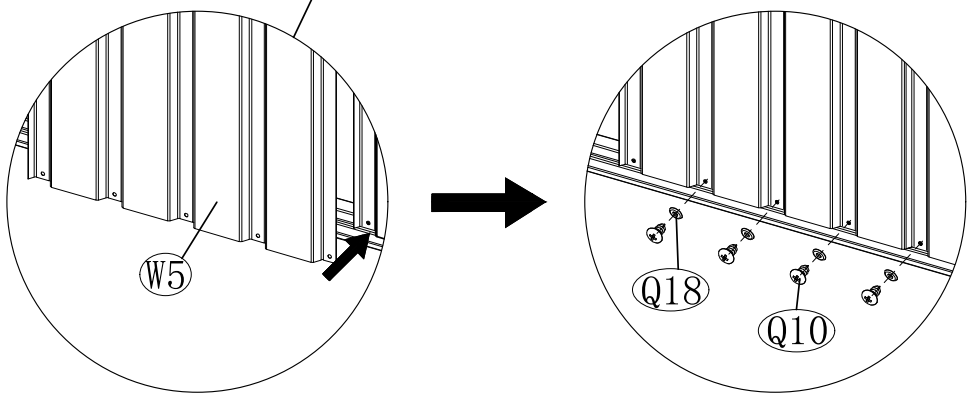

NO.	PART.	Qty.
C2		1
Q10		8
Q18		8

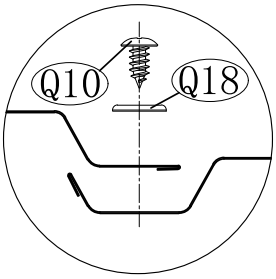

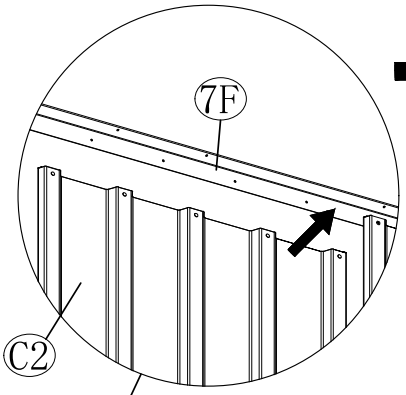

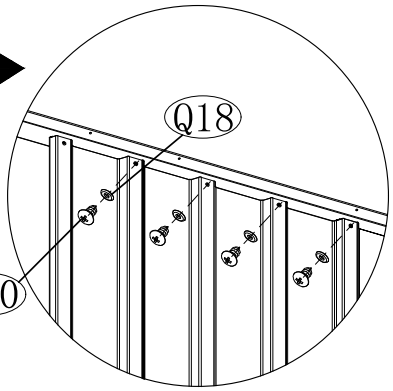

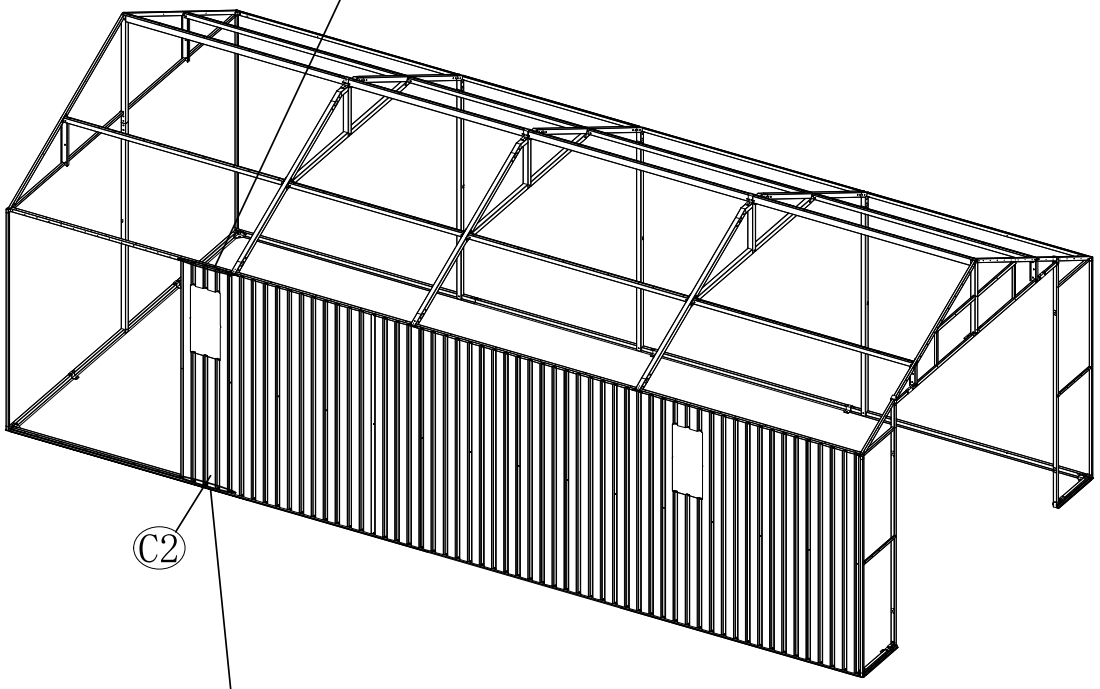

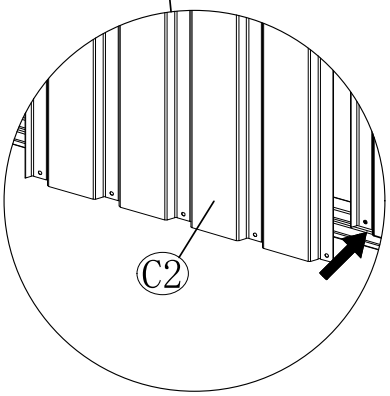

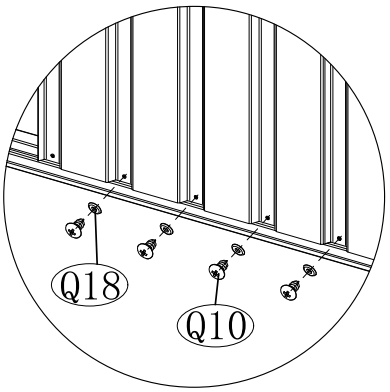

NO.	PART.	Qty.
W5	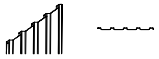	1
Q10		8
Q18		8

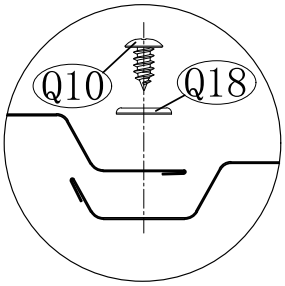

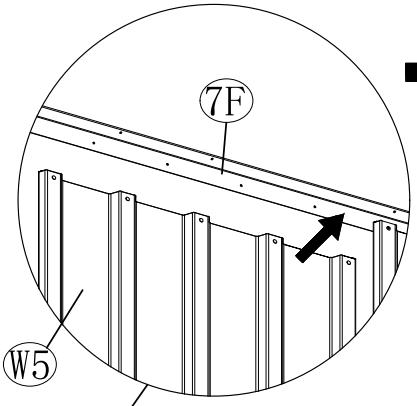

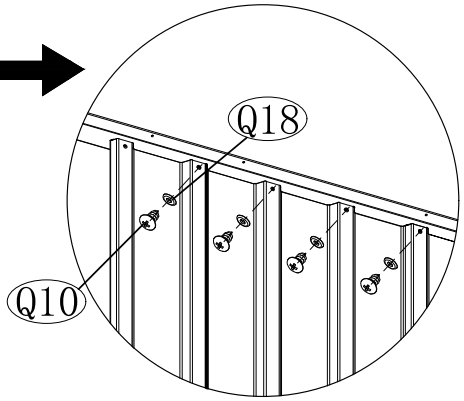

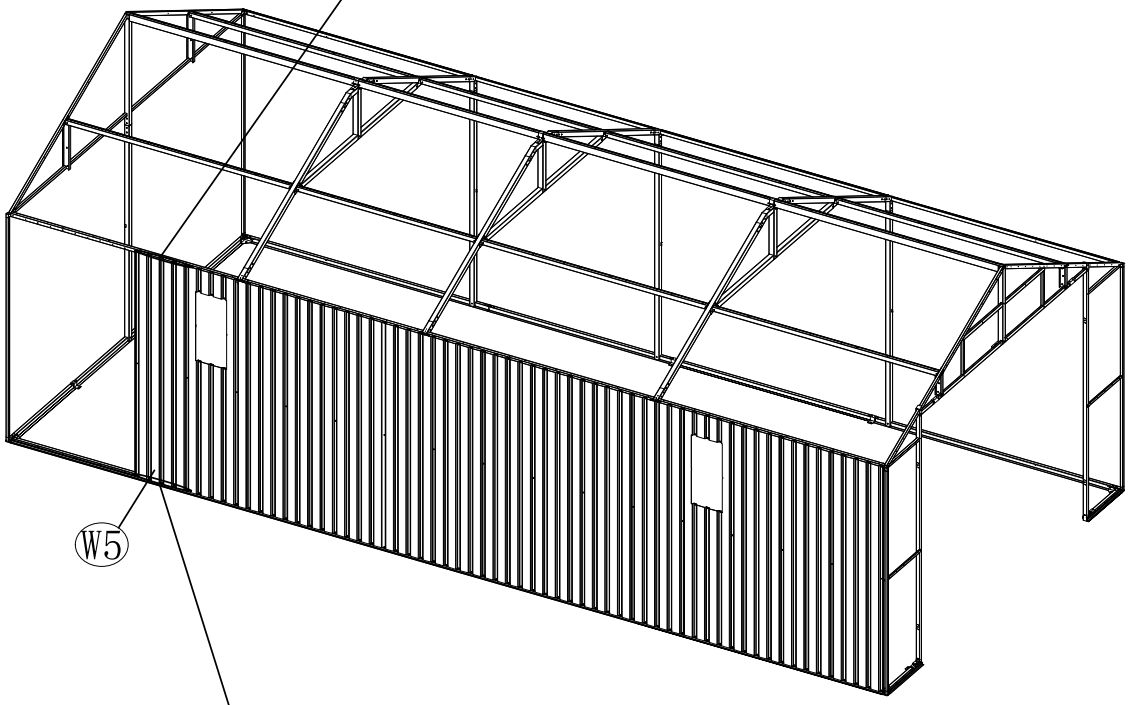

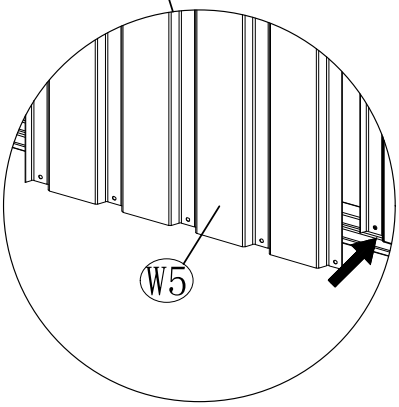

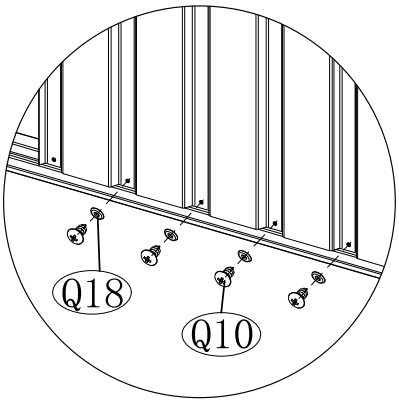

NO.	PART.	Qty.
W3		1
Q10		6
Q18		6

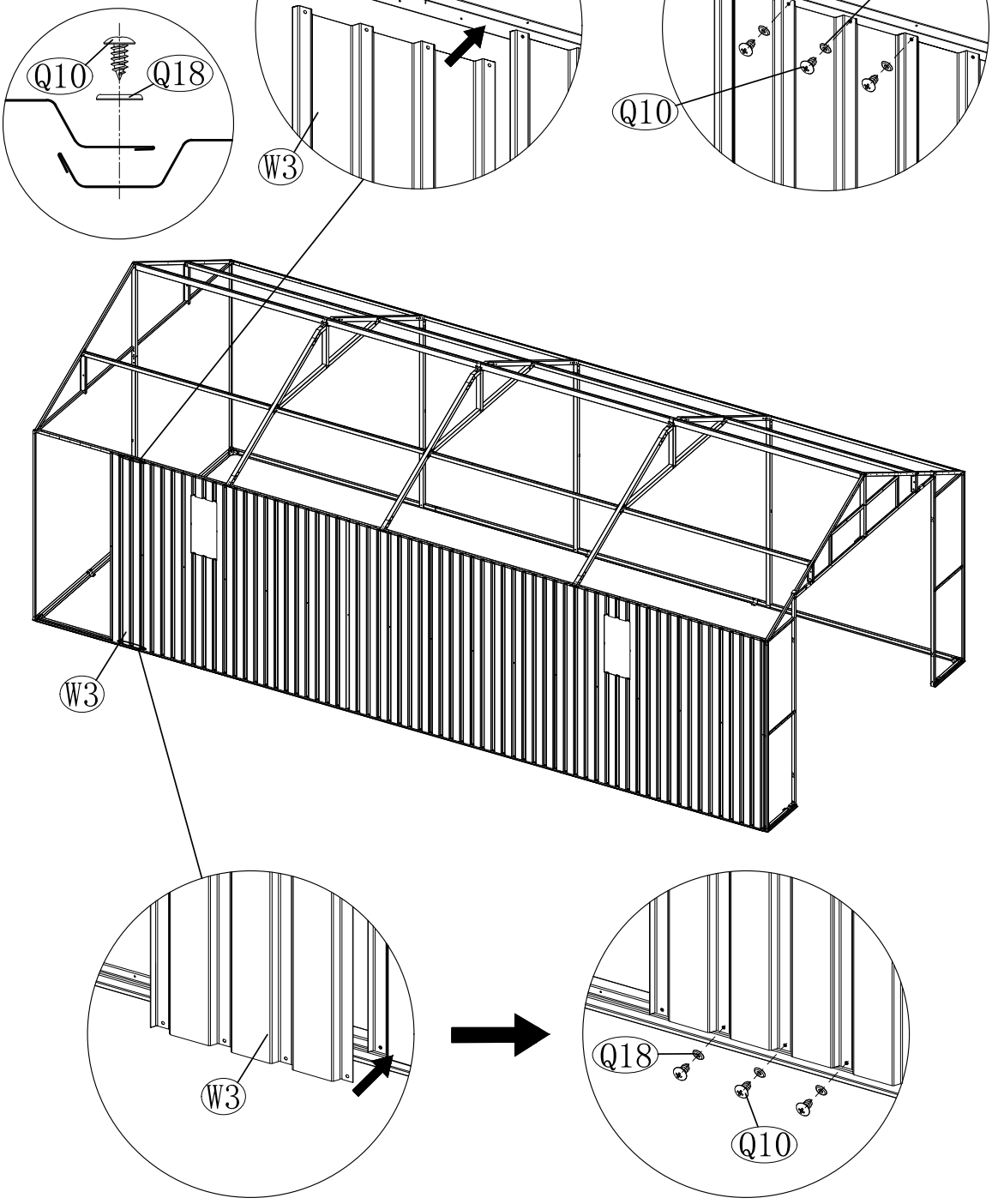

NO.	PART.	Qty.	NO.	PART.	Qty.
18R		1	Q35A		1
Q38		4	Q35B		1
Q54		4	Q35C		1

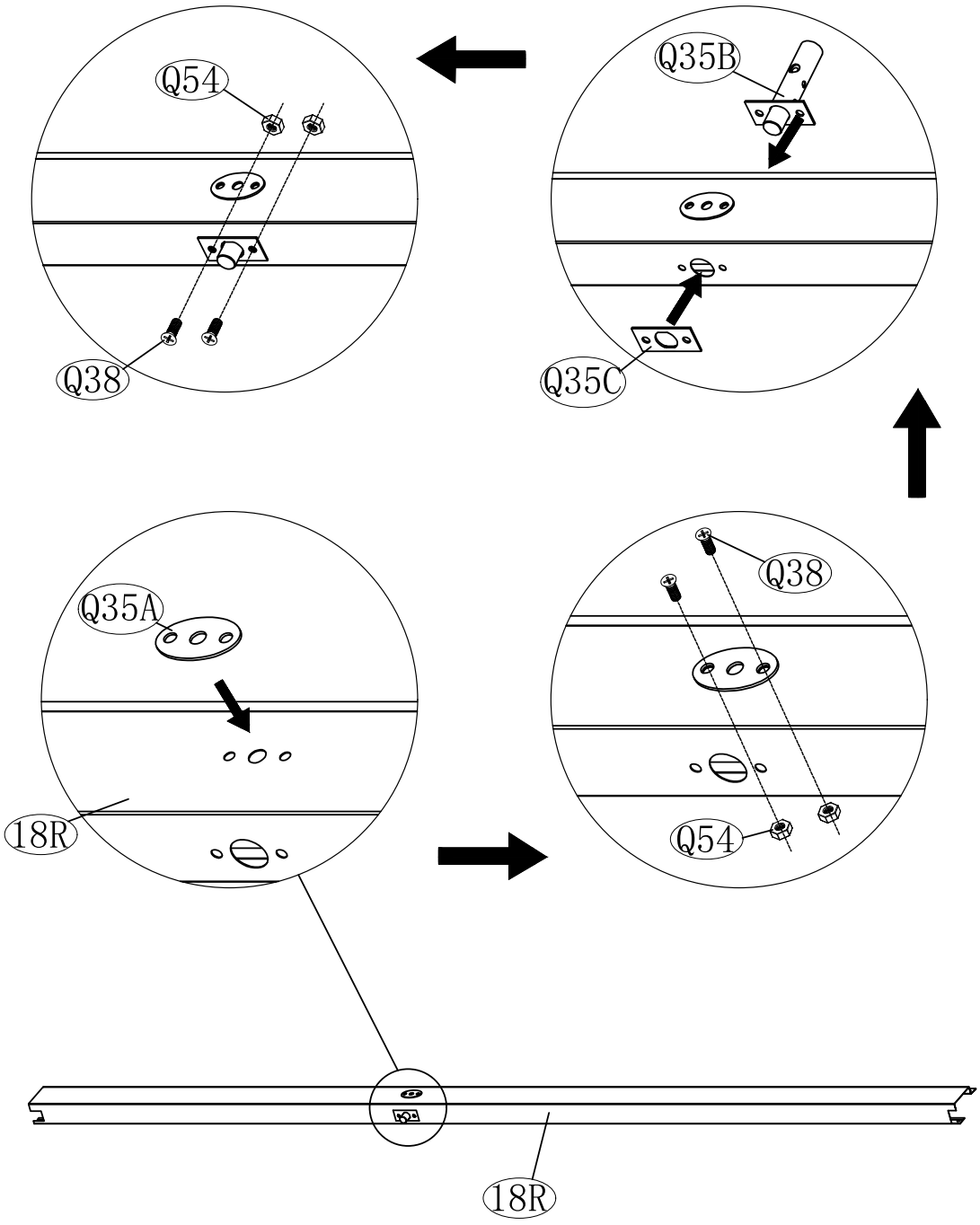

NO.	PART.	Qty.
Q10		4
Q18		4

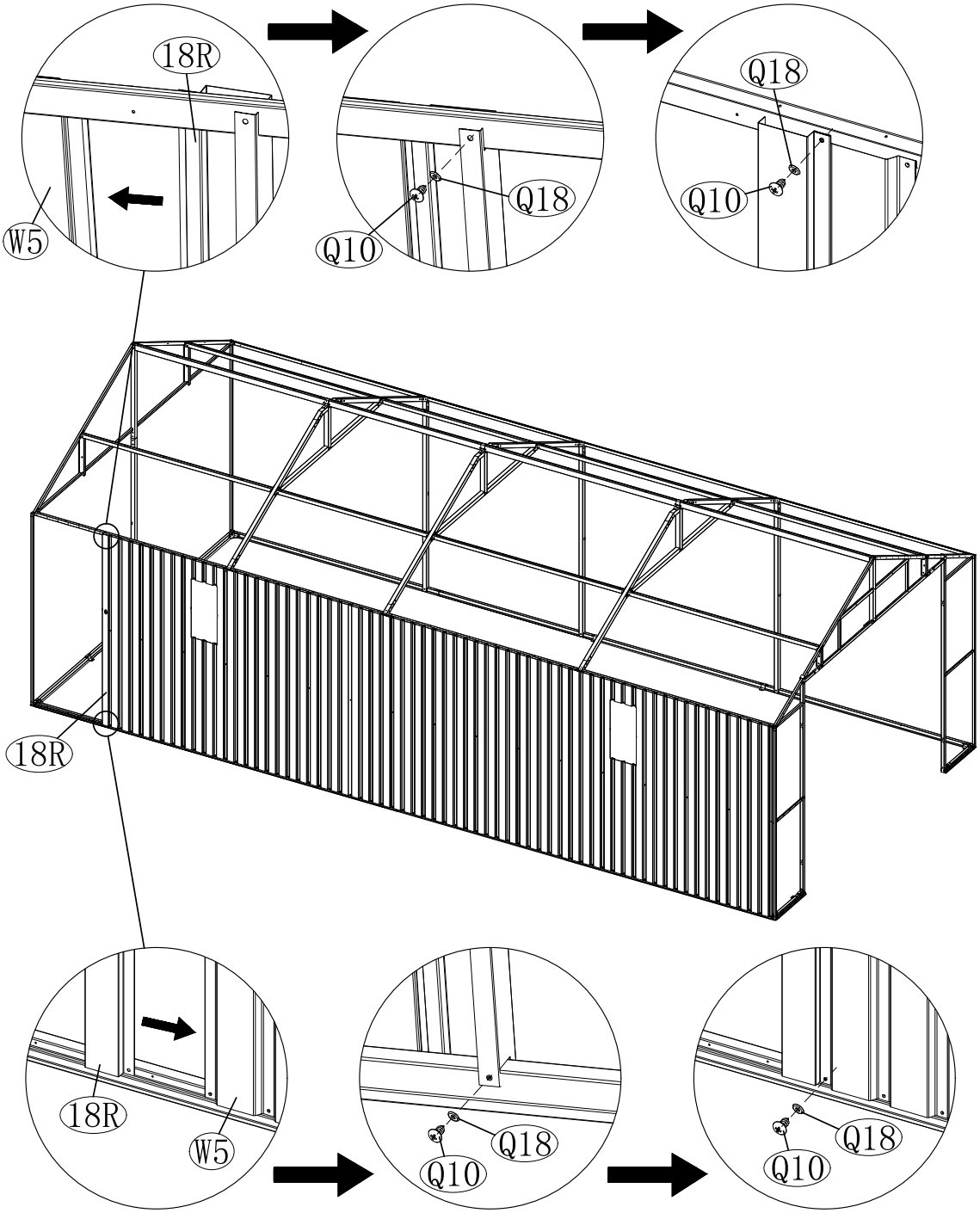

NO.	PART.	Qty.
18L		1
Q10		2
Q18		2

NO.	PART.	Qty.
W7		1
Q10		2
Q18		2

NO.	PART.	Qty.
23X	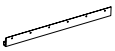	1
Q10		6

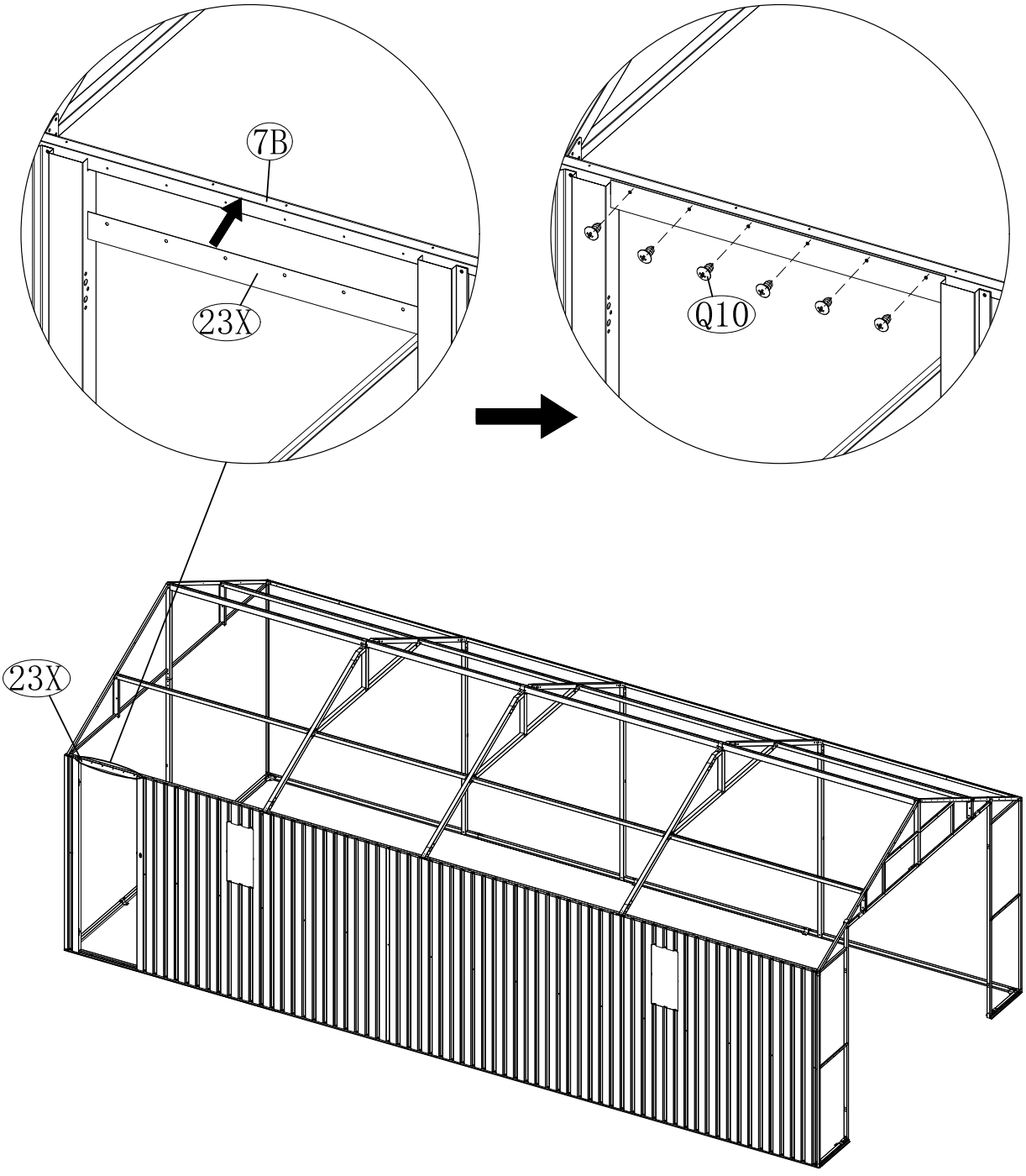

NO.	PART.	Qty.
W3		1
W1R		1
Q10		9
Q18		9

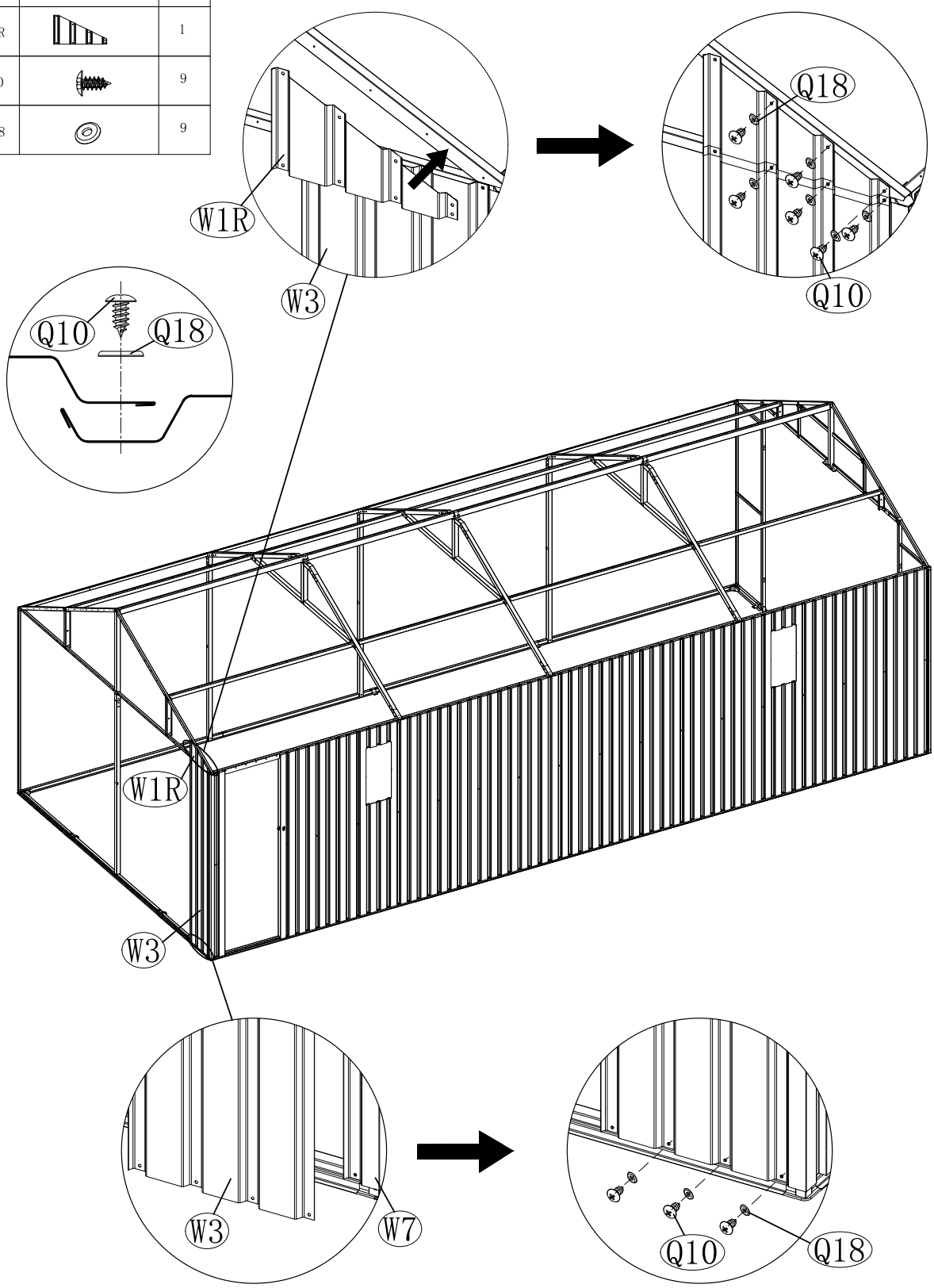

NO.	PART.	Qty.
W3		3
W2R		1
W3R		1
W4R		1
Q10		27
Q18		27

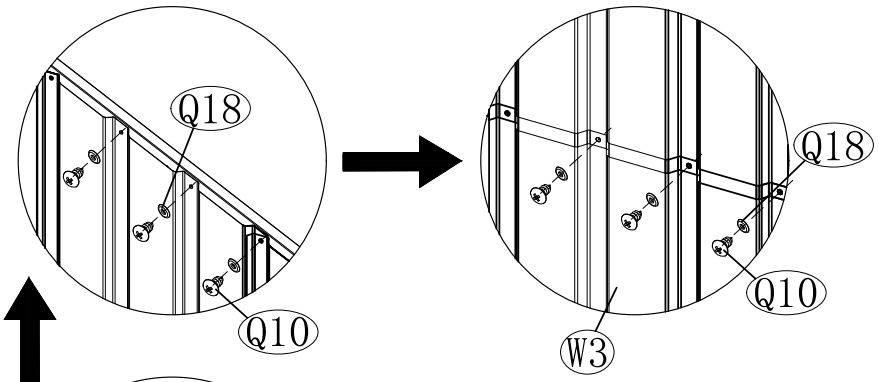

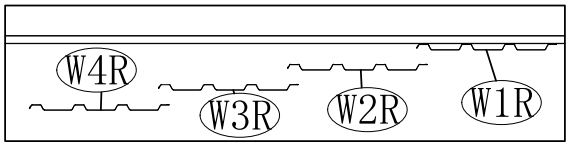

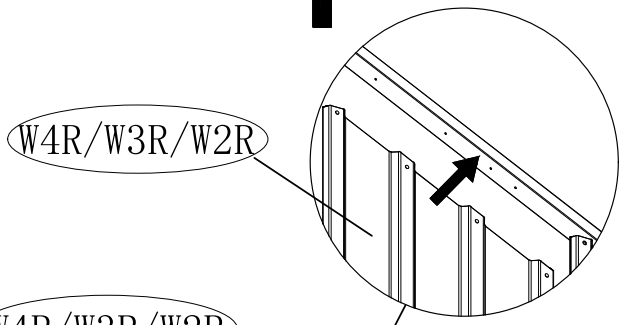

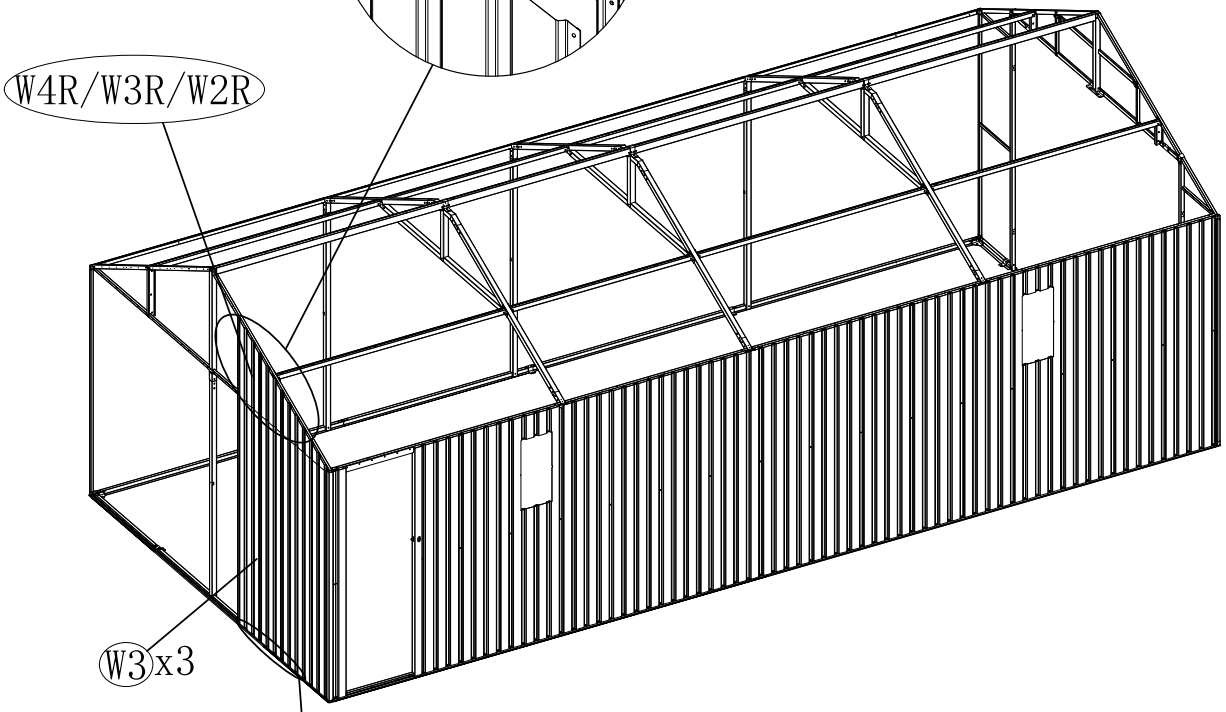

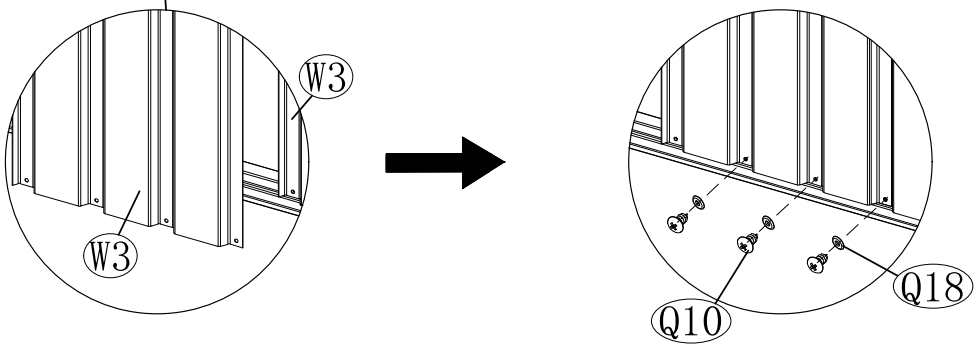

NO.	PART.	Qty.
W5		1
W5R		1
Q10		12
Q18		12

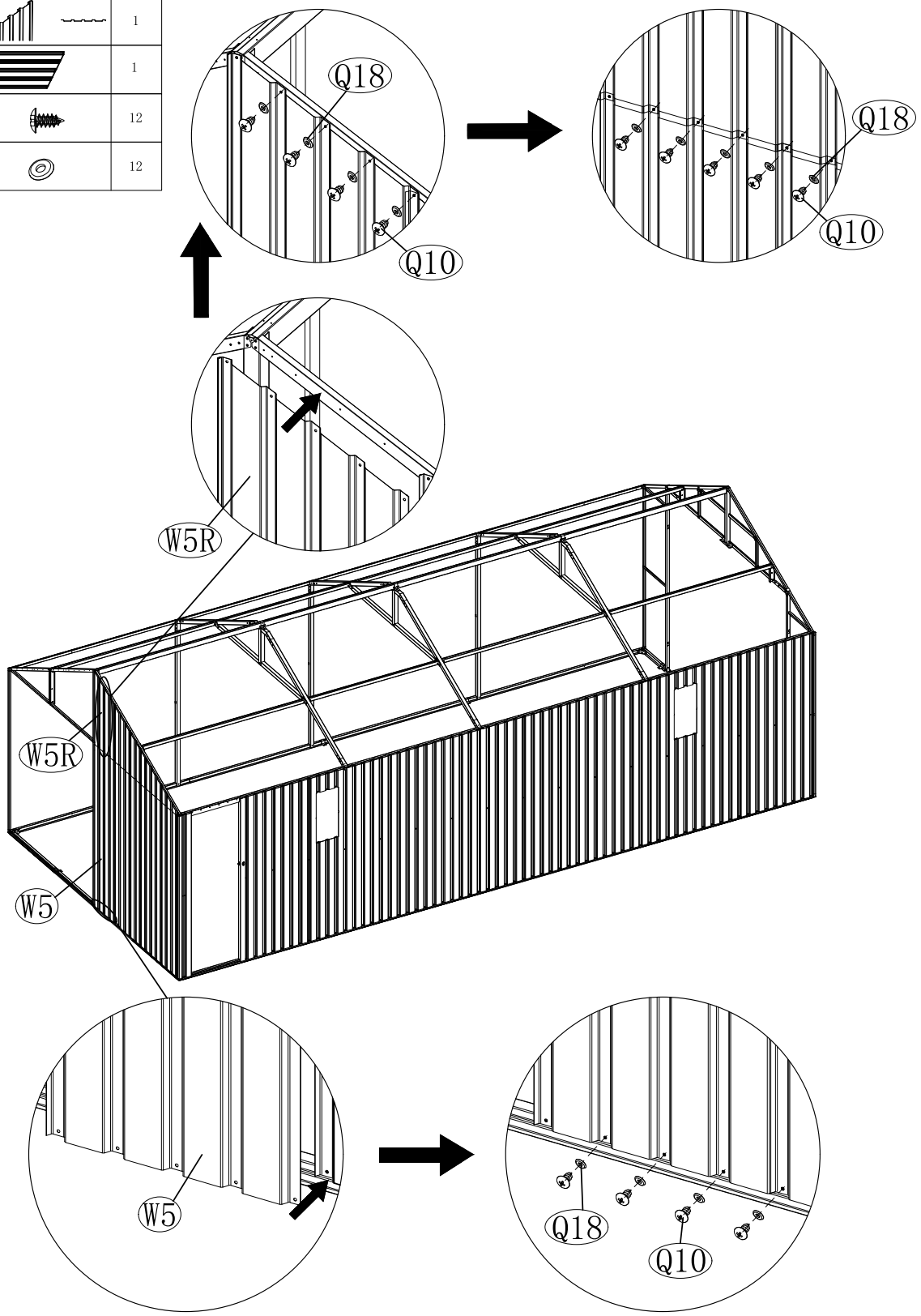

NO.	PART.	Qty.
W5		1
W5L		1
Q10		12
Q18		12

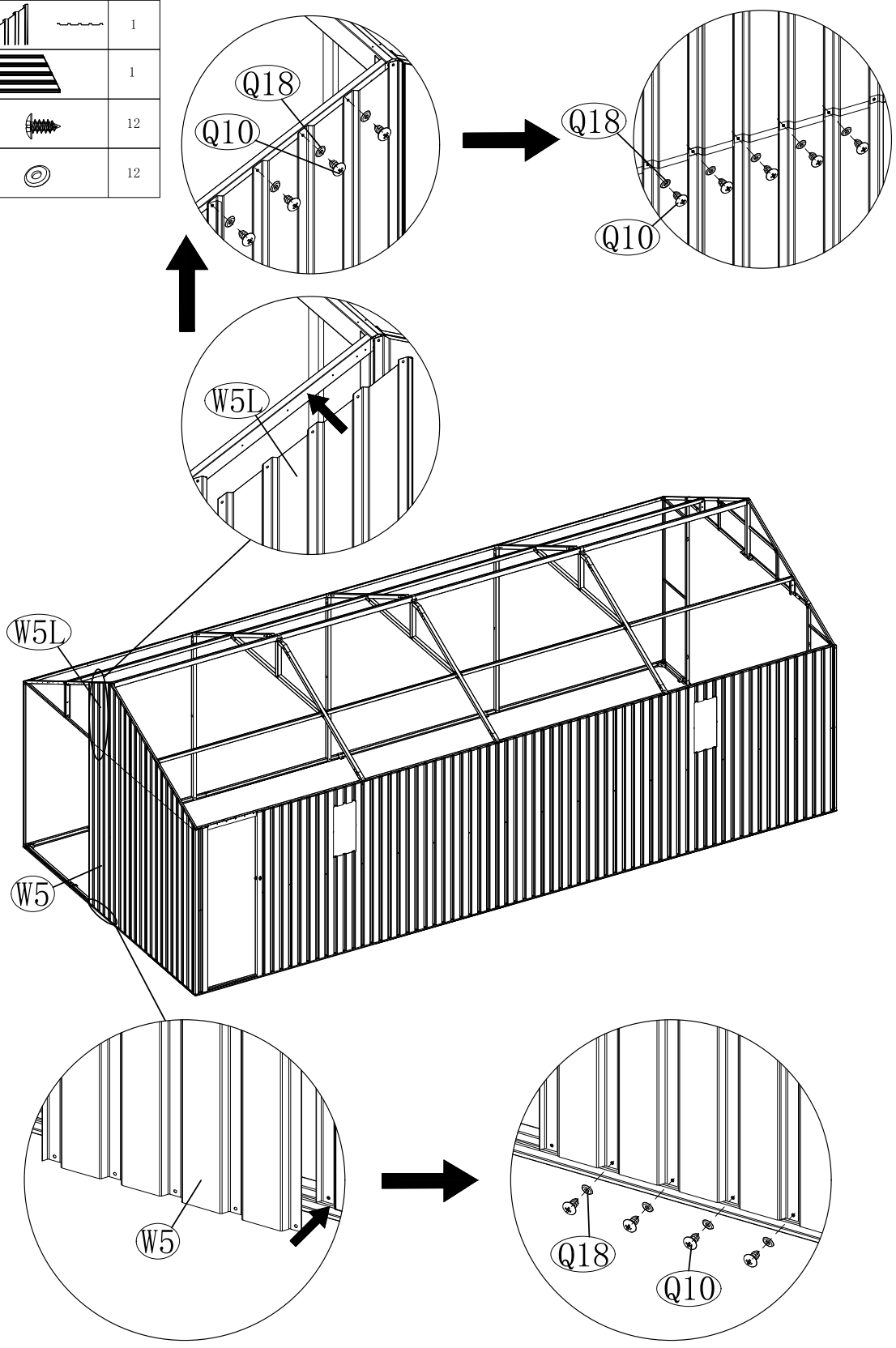

NO.	PART.	Qty.
W3		3
W2L		1
W3L		1
W4L		1
Q10		27
Q18		27

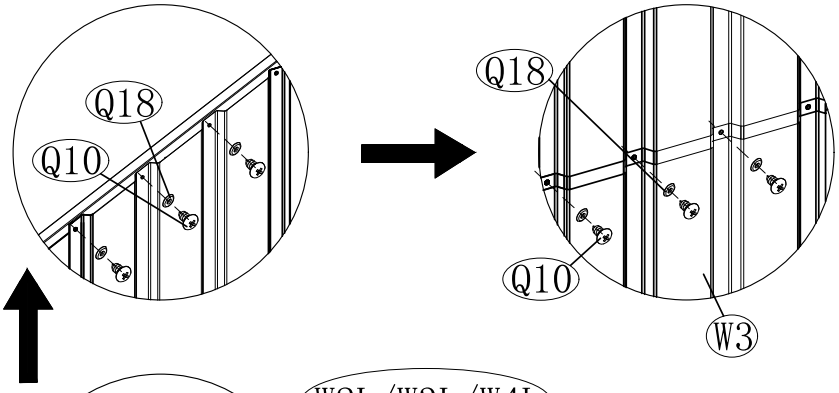

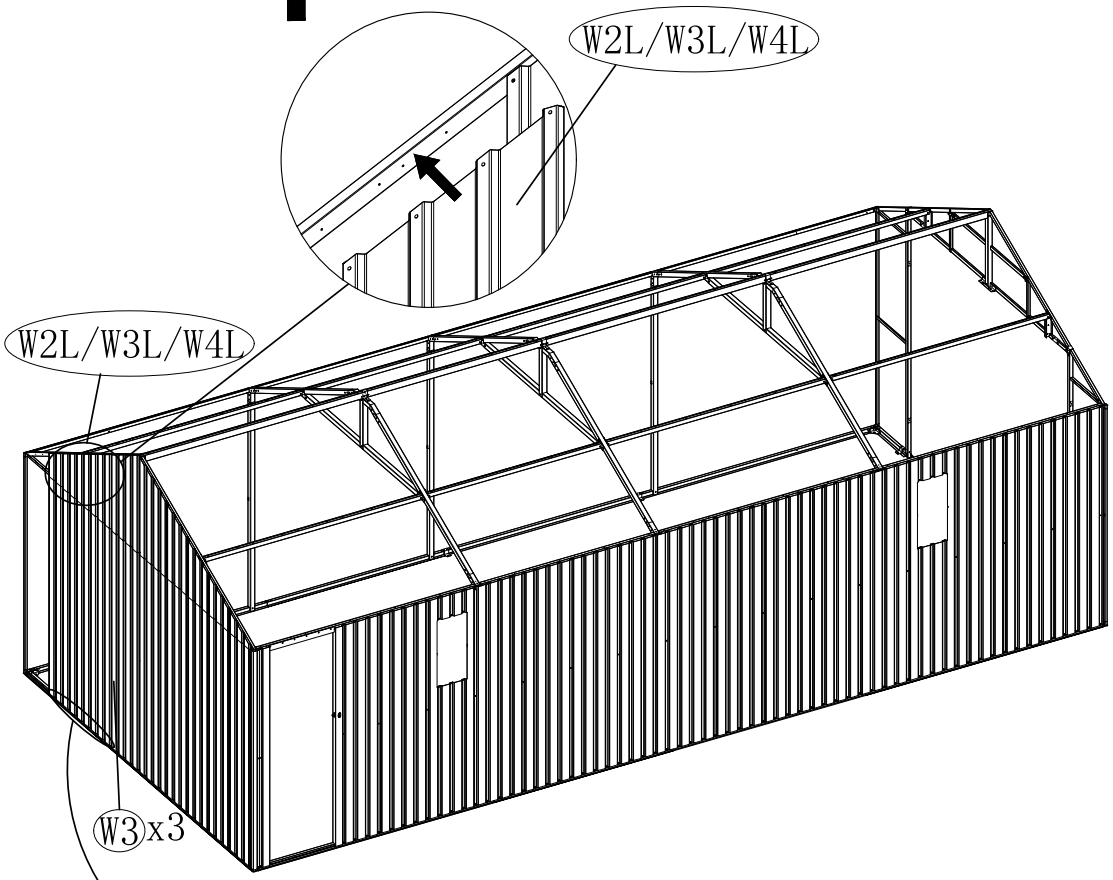

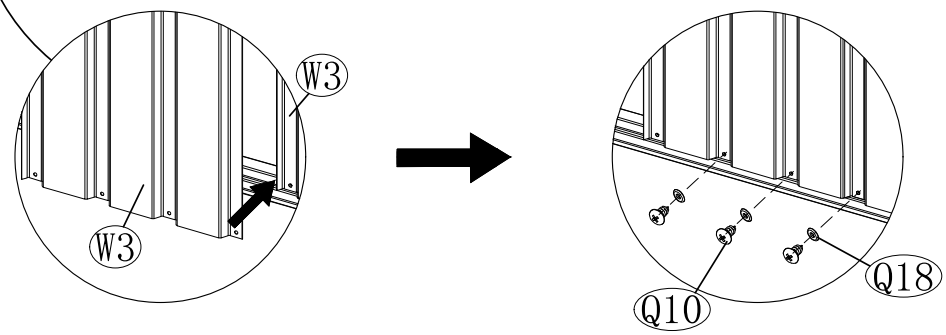

NO.	PART.	Qty.
W3		1
W1R		1
Q10		10
Q18		10

NO.	PART.	Qty.
W7		1
Q10		2
Q18		2

NO.	PART.	Qty.
W3		1
Q10		6
Q18		6

NO.	PART.	Qty.
W3		1
Q10		6
Q18		6

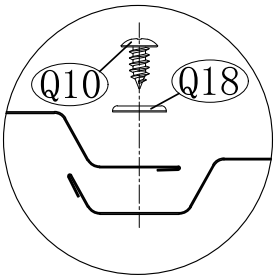

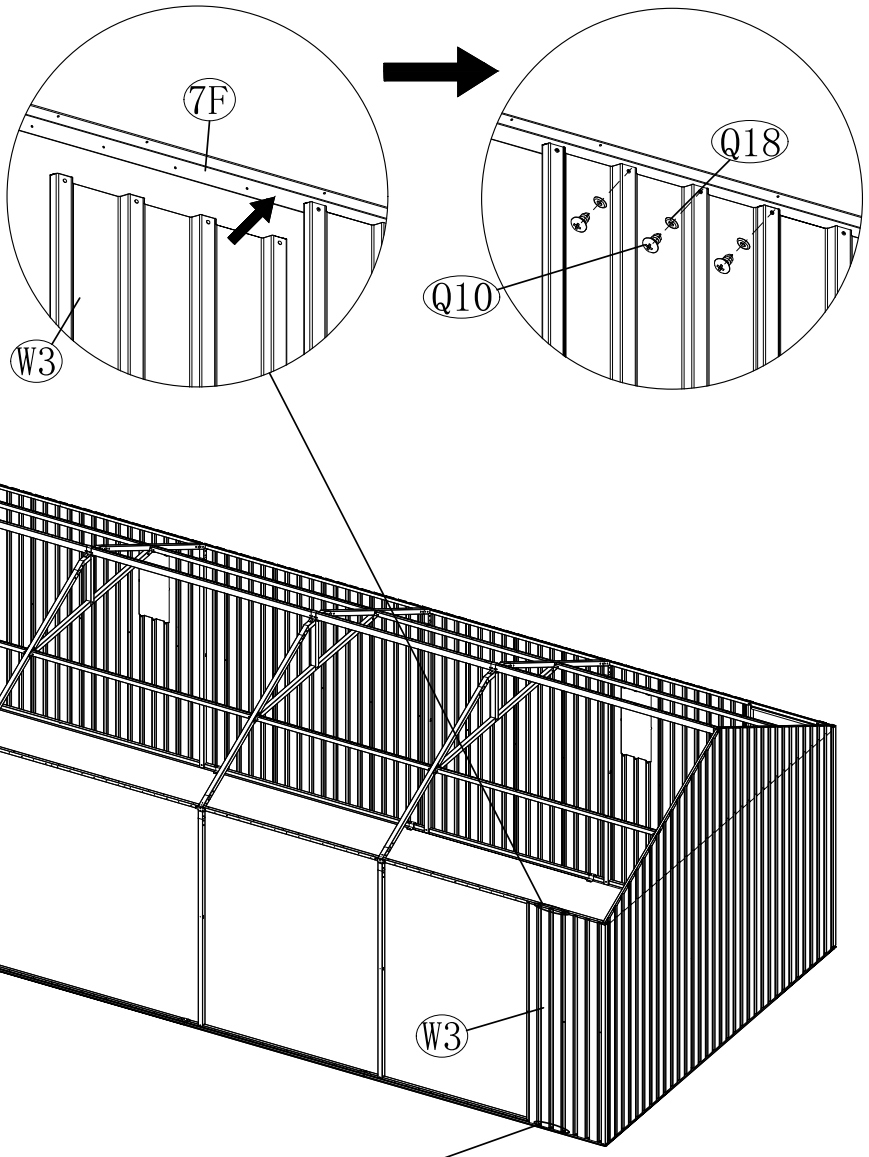

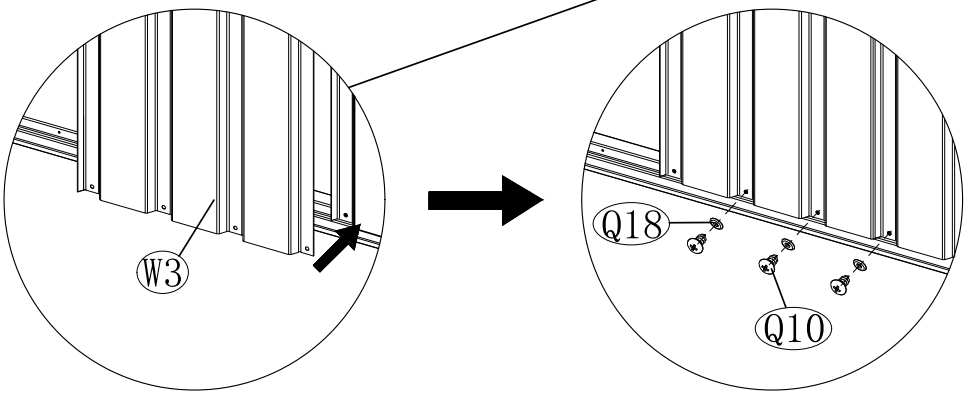

NO.	PART.	Qty.
W5		2
Q10		16
Q18		16

NO.	PART.	Qty.
C2		1
Q10		8
Q18		8

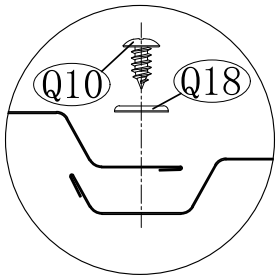

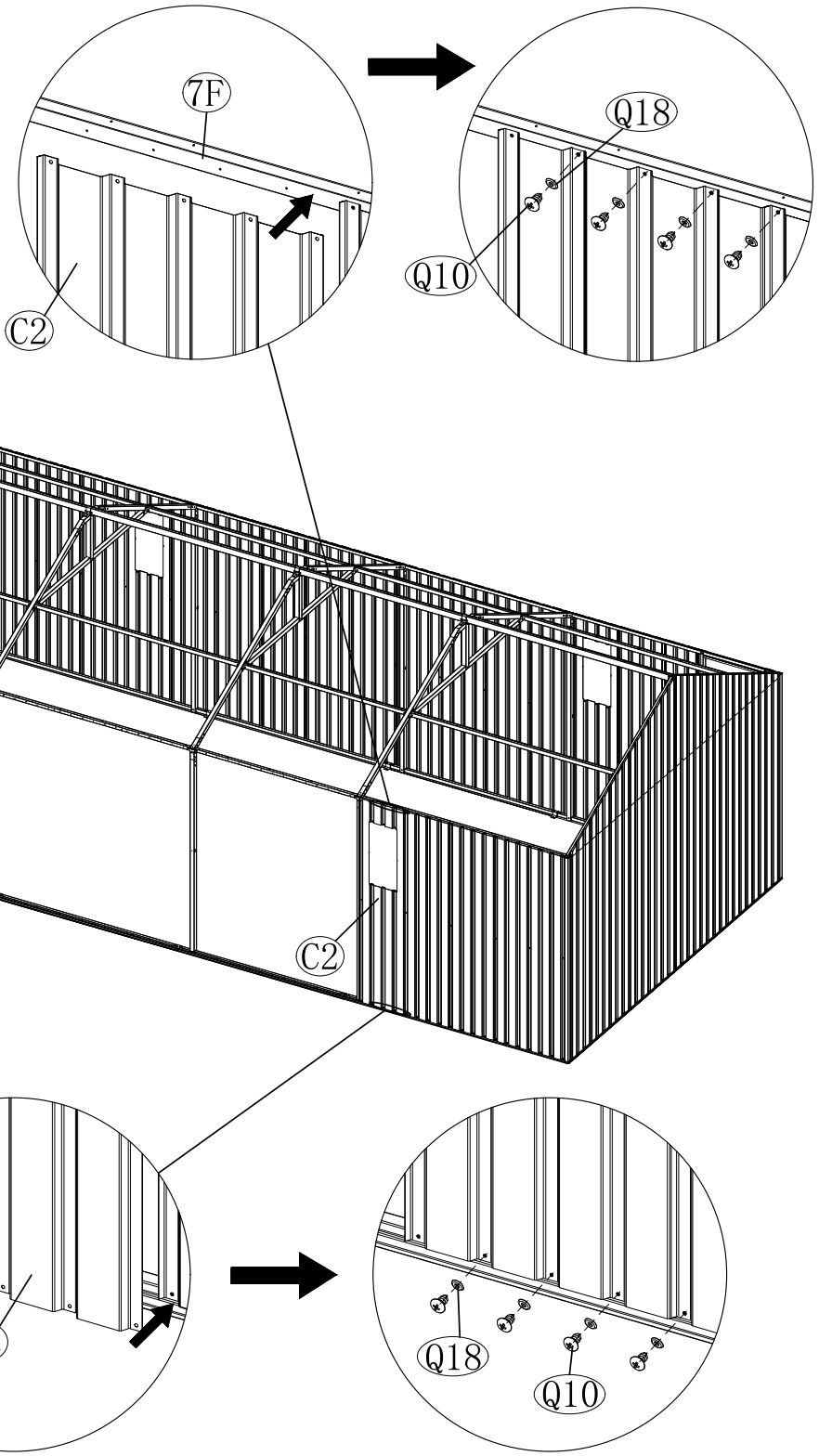

NO.	PART.	Qty.
W5		9
Q10		72
Q18		72

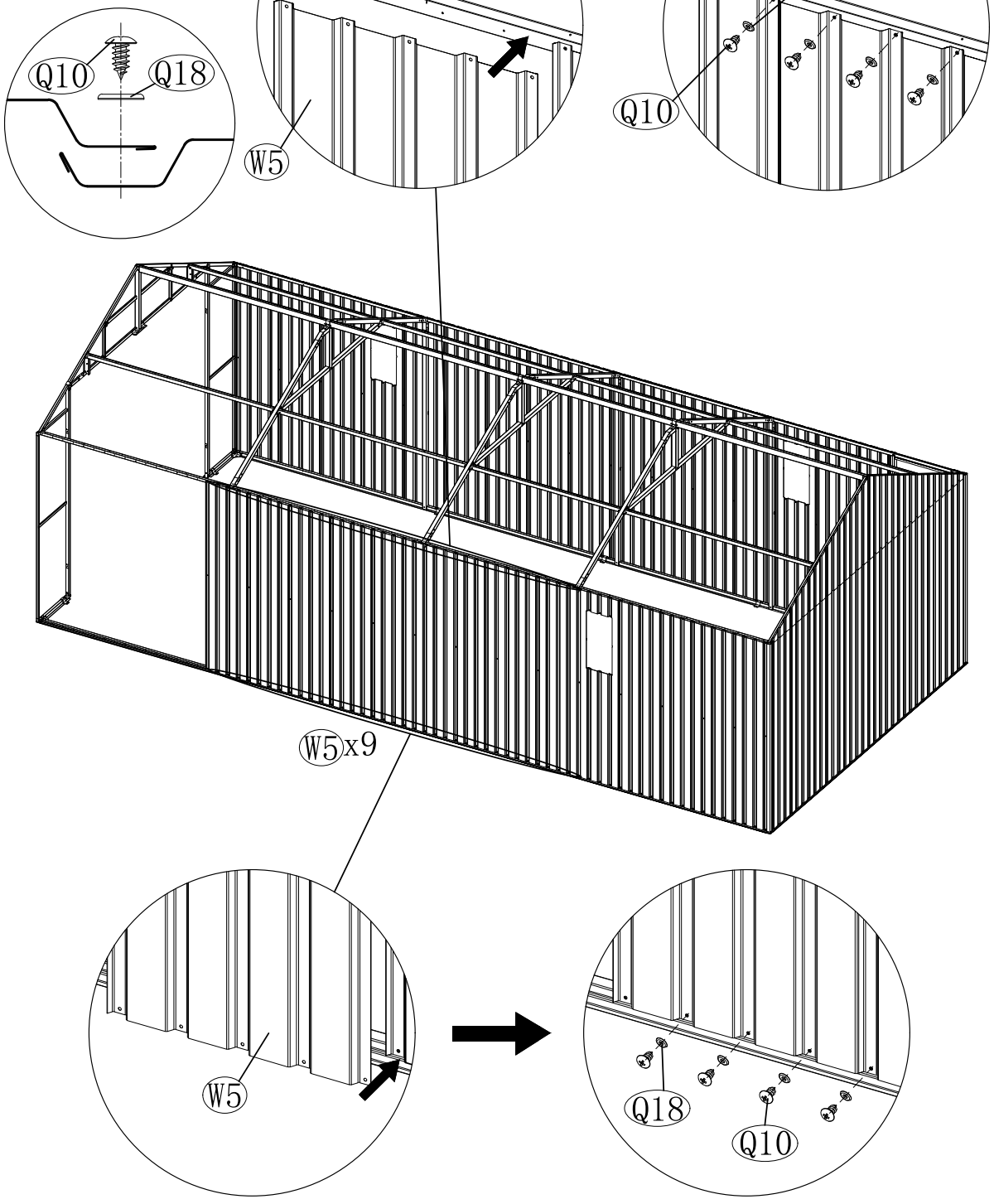

NO.	PART.	Qty.
C2		1
Q10		8
Q18		8

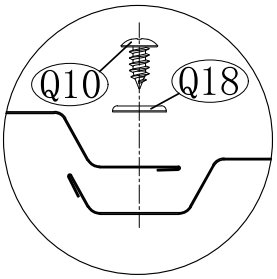

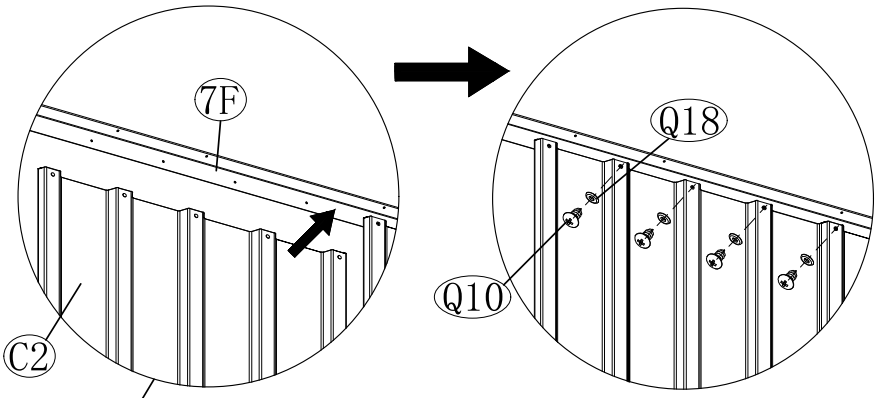

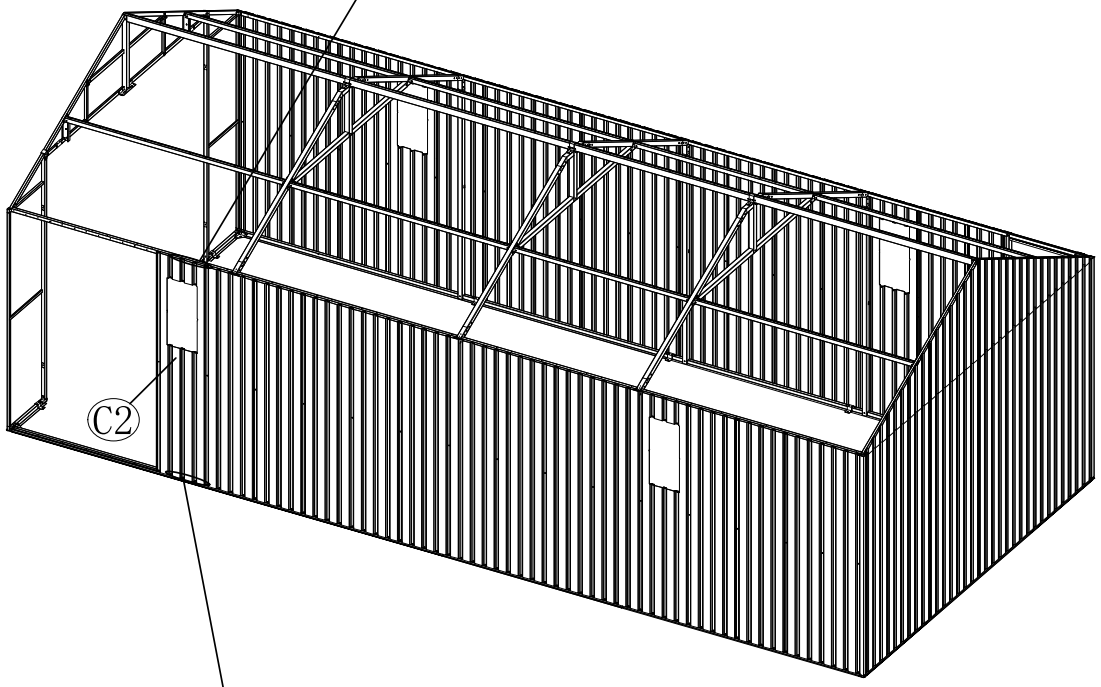

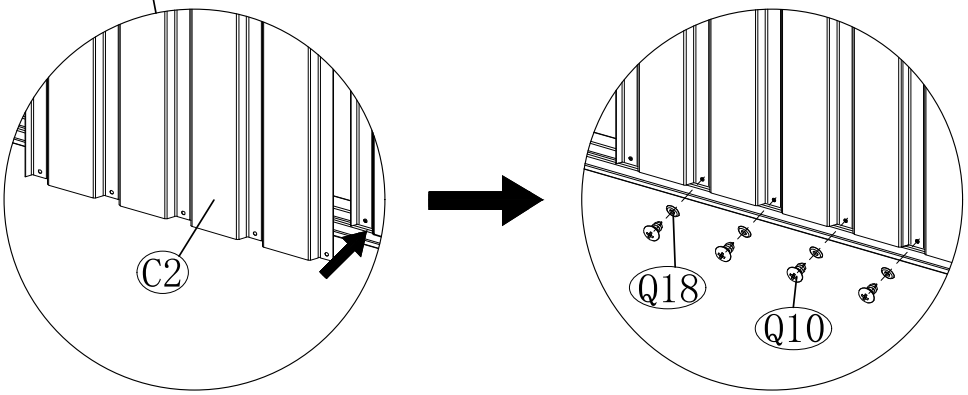

NO.	PART.	Qty.
W5	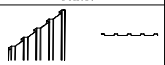	3
Q10		24
Q18		24

NO.	PART.	Qty.
W2		2
W6L		1
W6R		1
Q10		20
Q18		20

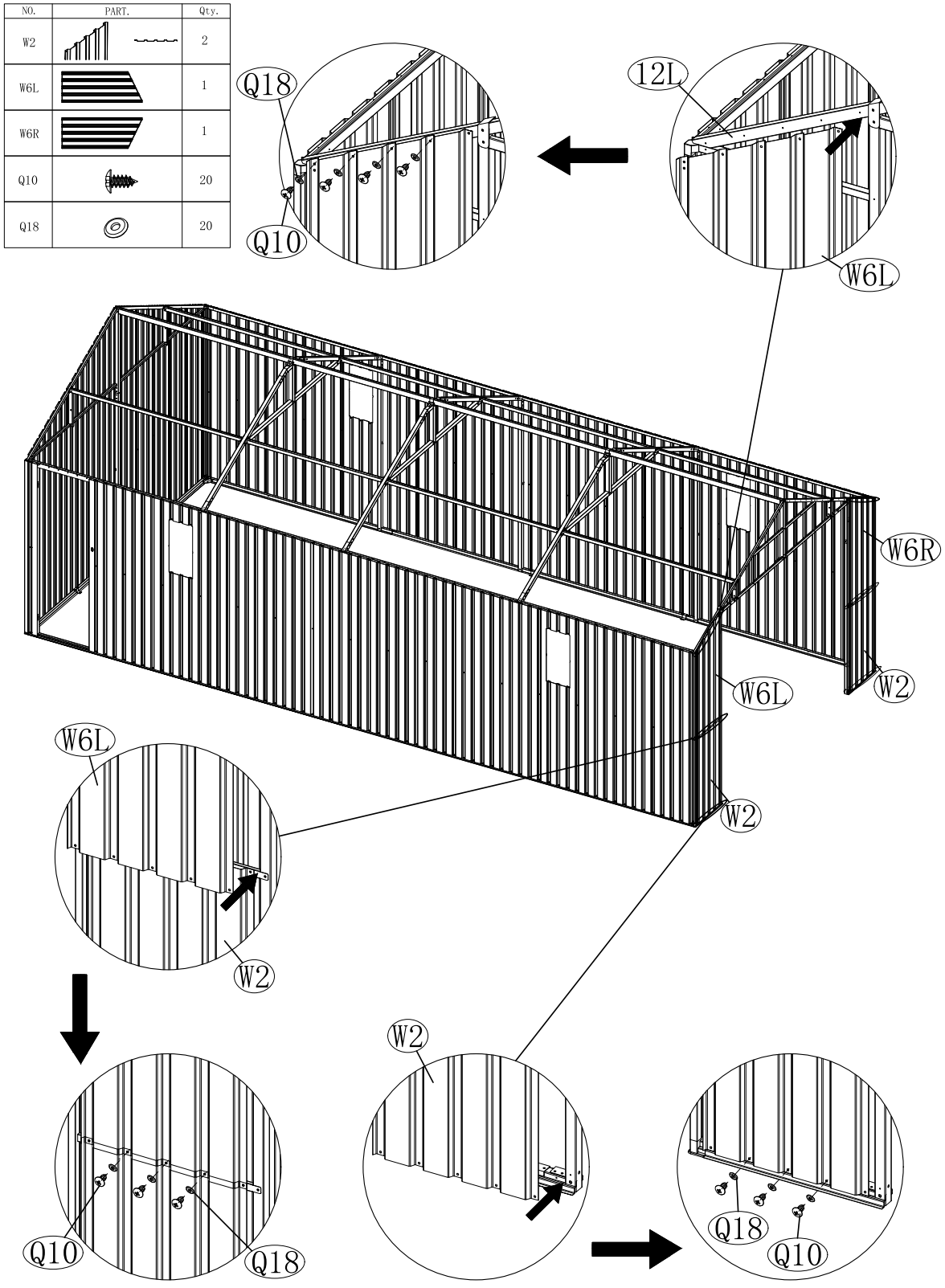

NO.	PART.	Qty.
17L		1
17R		1
Q10		12
Q18		12

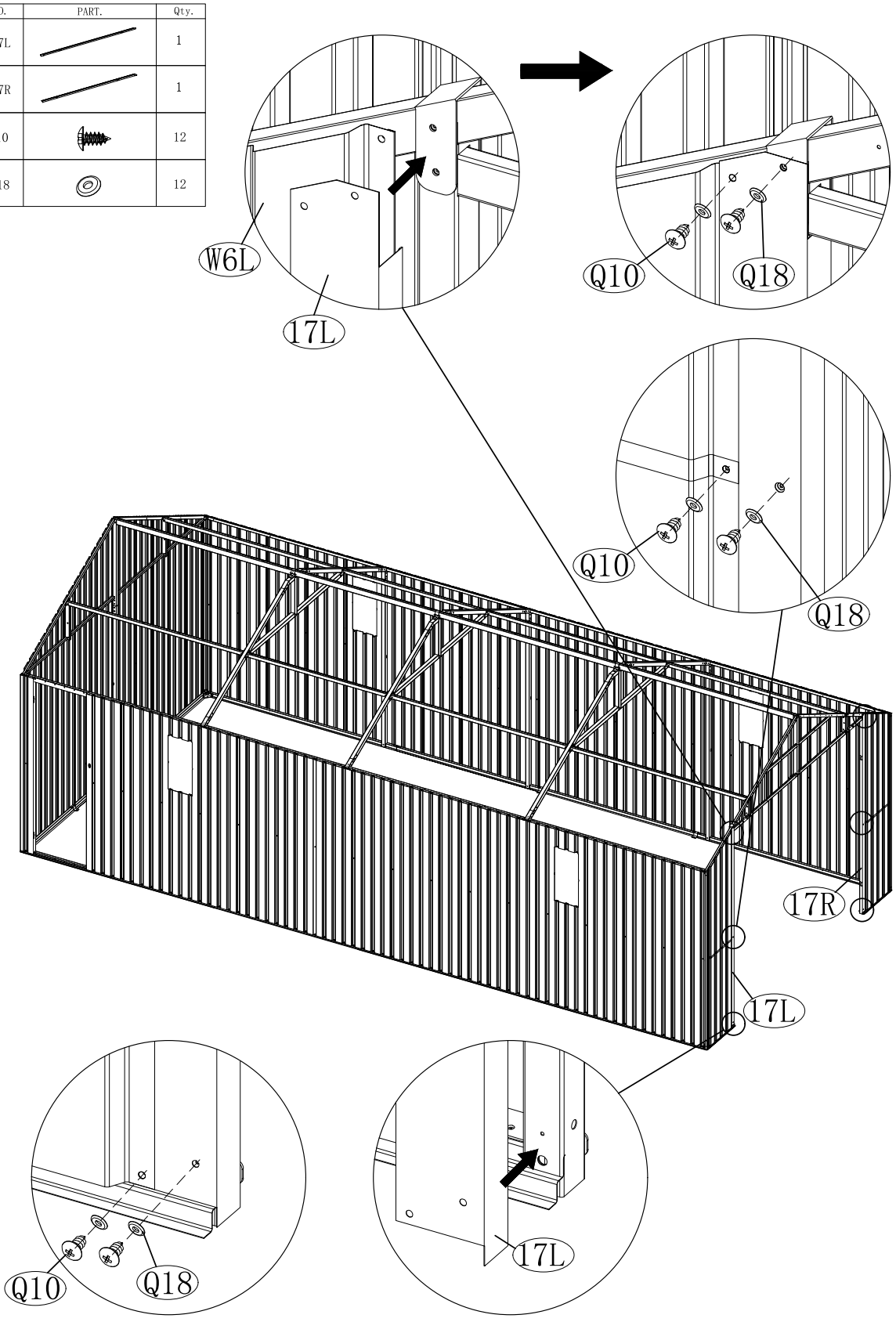

NO.	PART.	Qty.
W7		2
Q10		8
Q18		8

NO.	PART.	Qty.
38L		1
38R		1
Q10		17
Q18		17

NO.	PART.	Qty.
38		1
F6		2
Q39		4
Q42		4

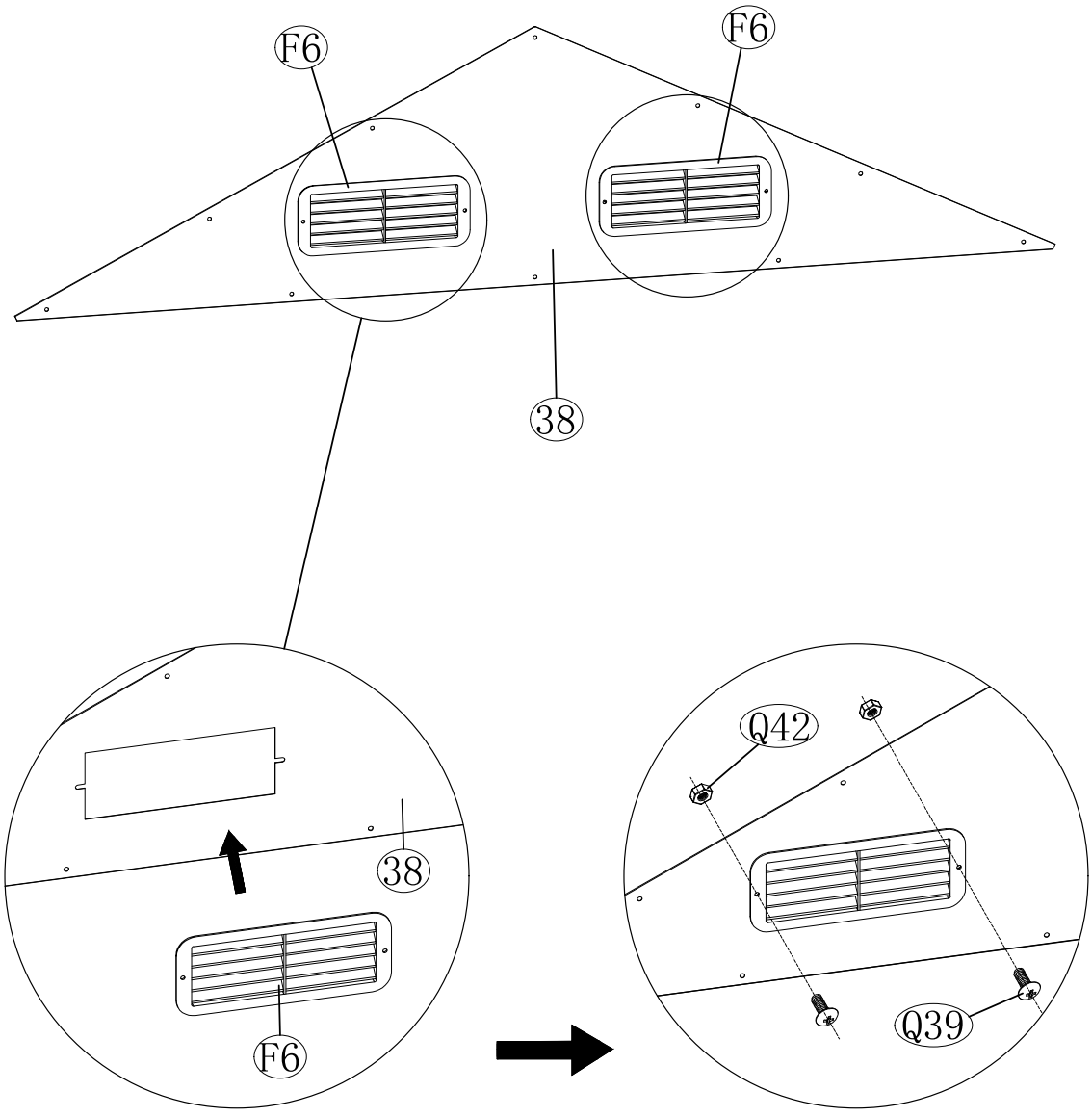

NO.	PART.	Qty.
Q10		10
Q18		10

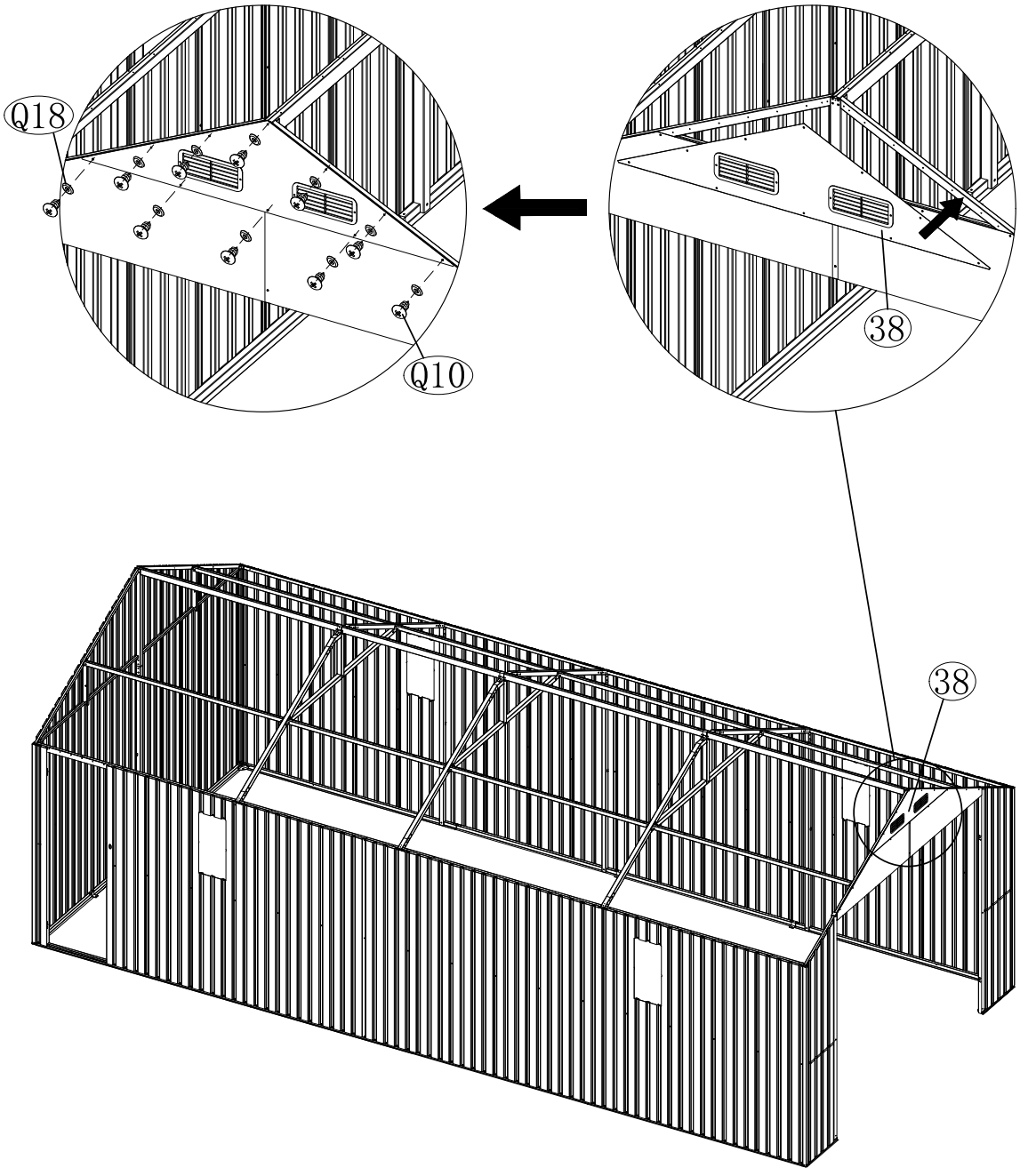

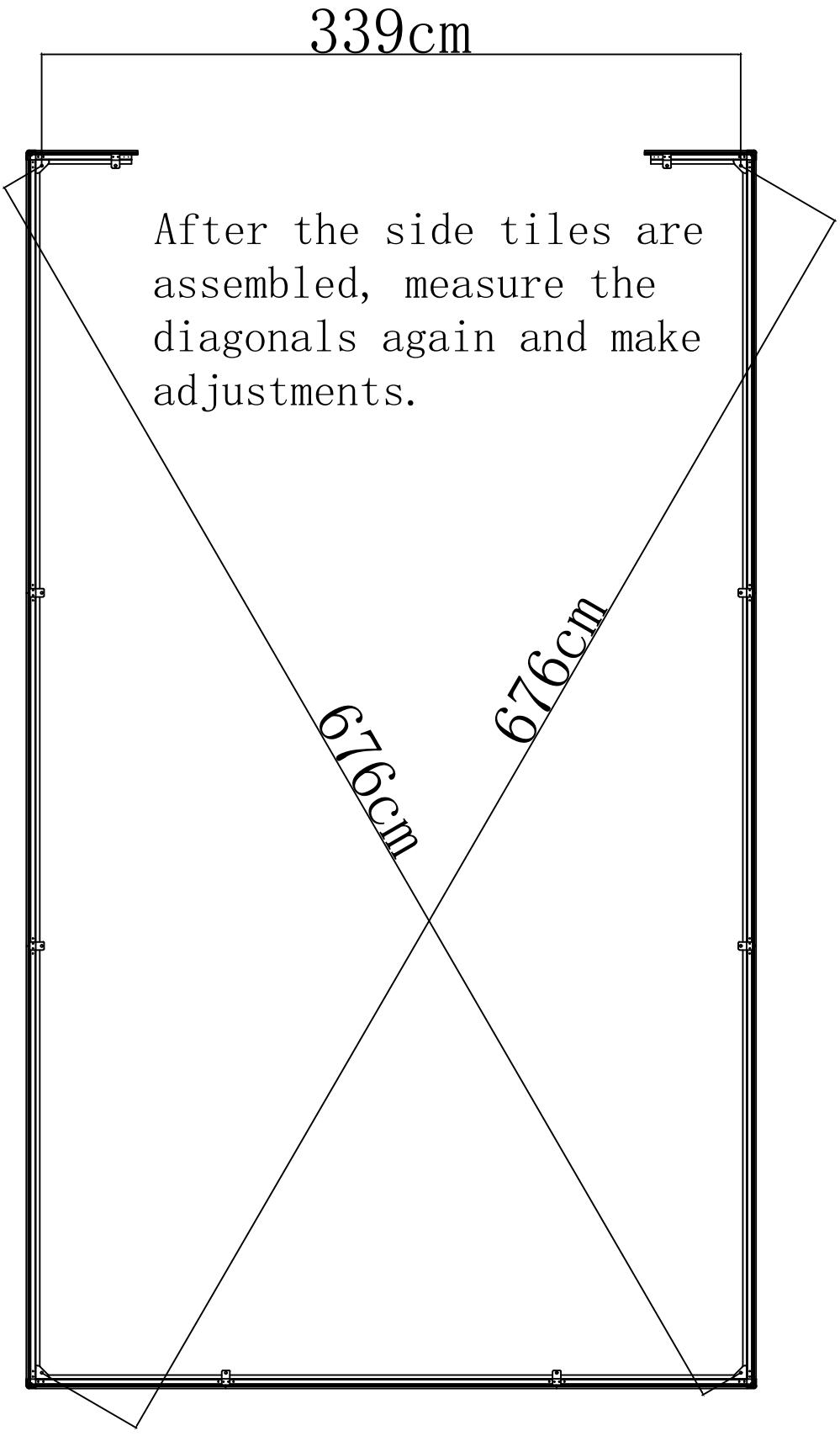
339cm
After the side tiles are assembled, measure the diagonals again and make adjustments.
676cm
676cm

NO.	PART.	Qty.
D4		2
Q13		12
Q19		12

NO.	PART.	Qty.
D4		8
Q32		28
Q13		48
Q18		28
Q19		48

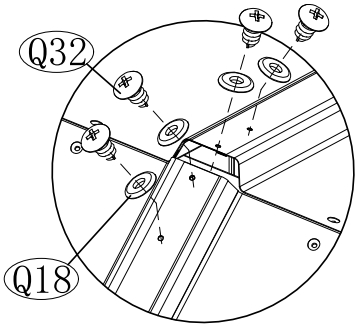

a1 x2

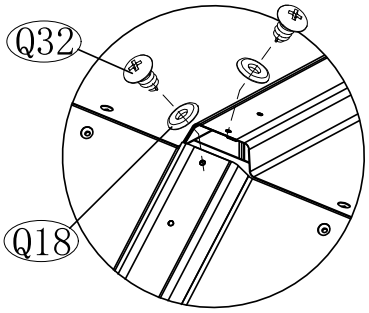

a2 x2

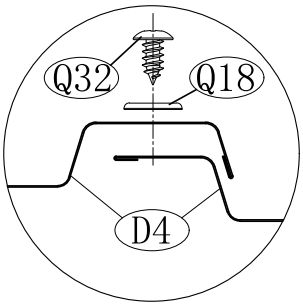

B x8

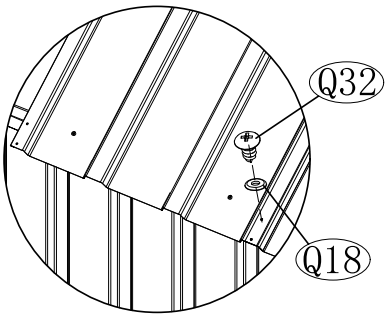

C x8

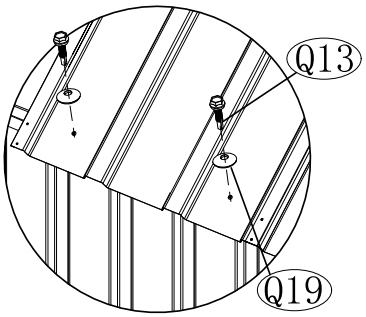

D x8

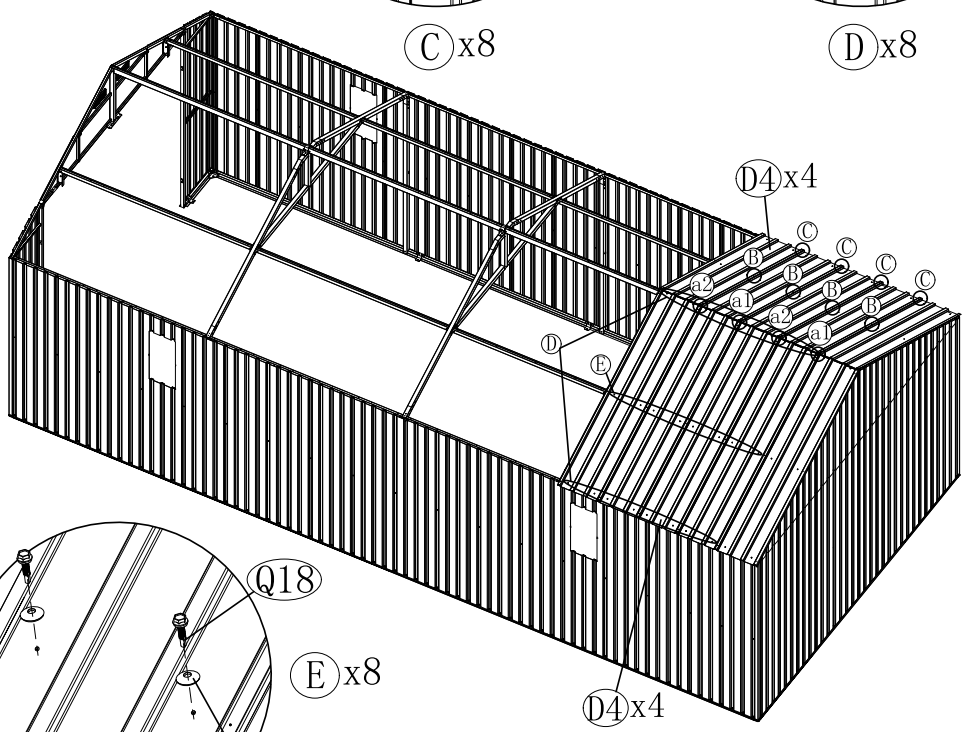

E x8

NO.	PART.	Qty.
Q4		1
Q32		2
Q18		2

Install plastic Q4 between the 3th and 4th pieces

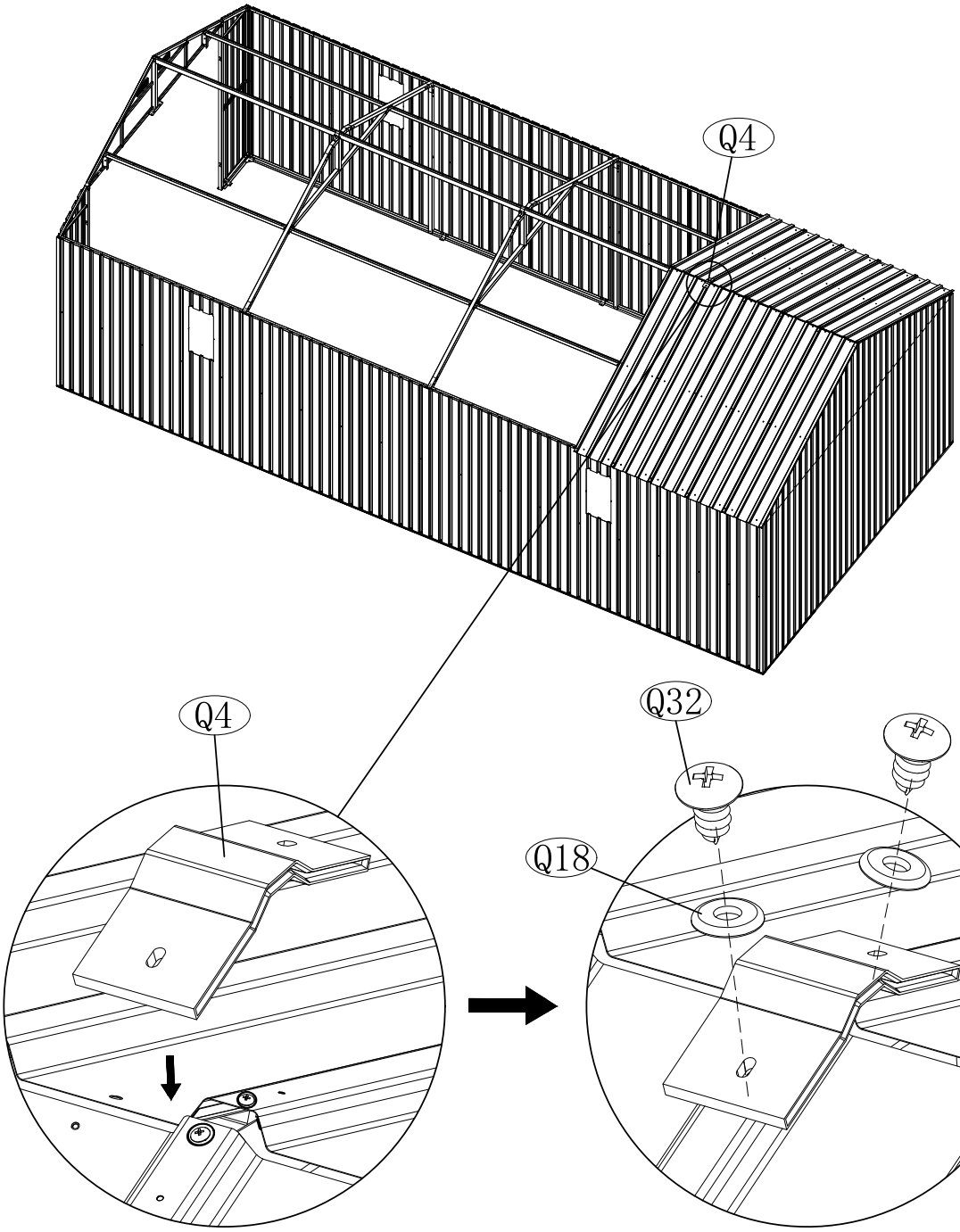

NO.	PART.	Qty.
D4		4
Q32		14
Q13		24
Q18		14
Q19		24

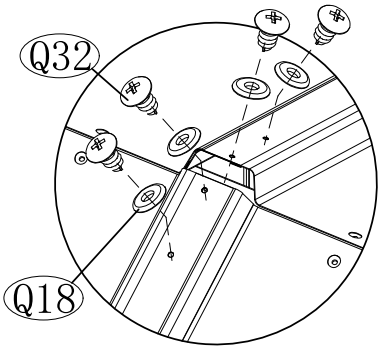

a1 x1

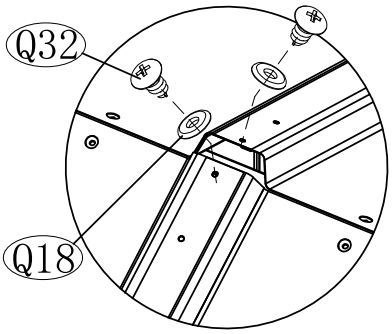

a2 x1

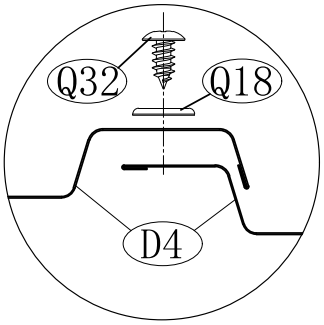

B x4

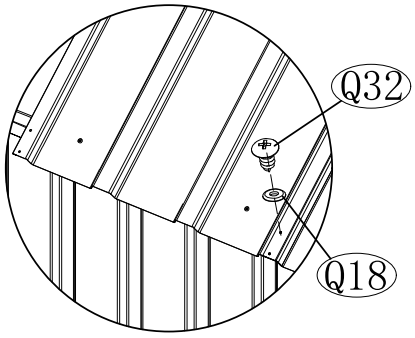

C x4

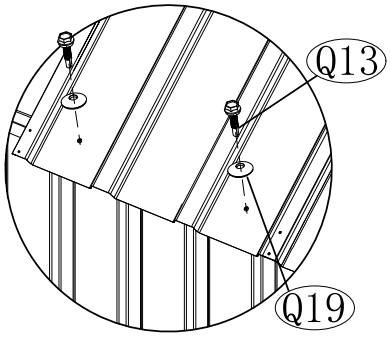

D x4

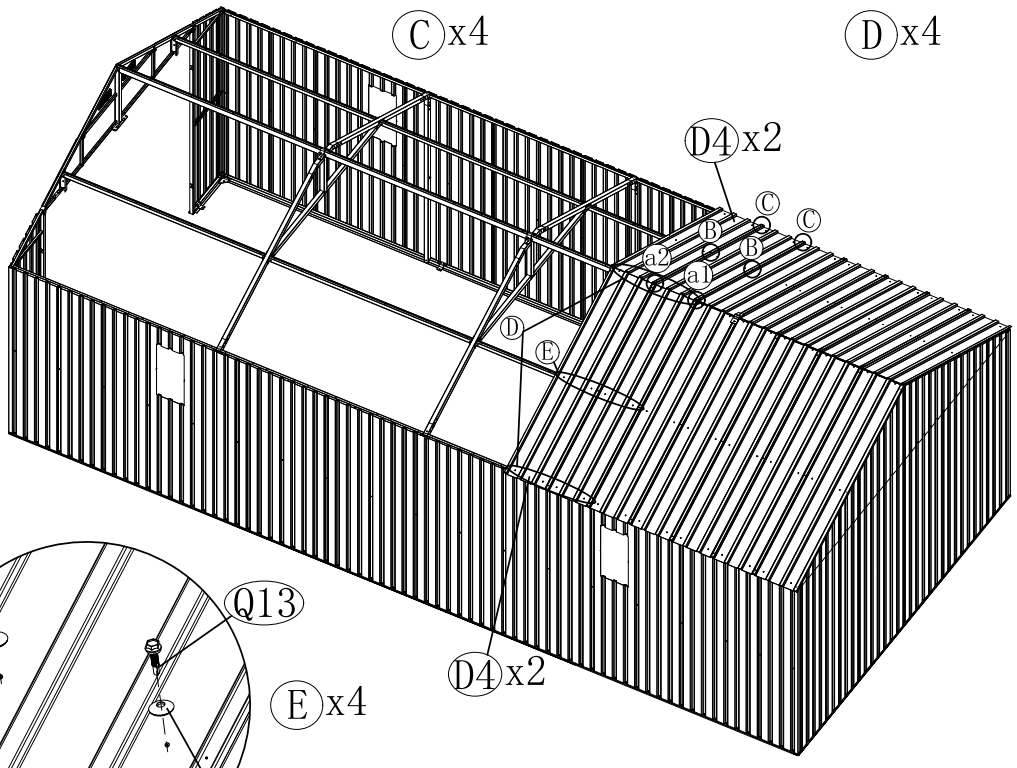

E x4

NO.	PART.	Qty.
18		1
Q32		2
Q18		2

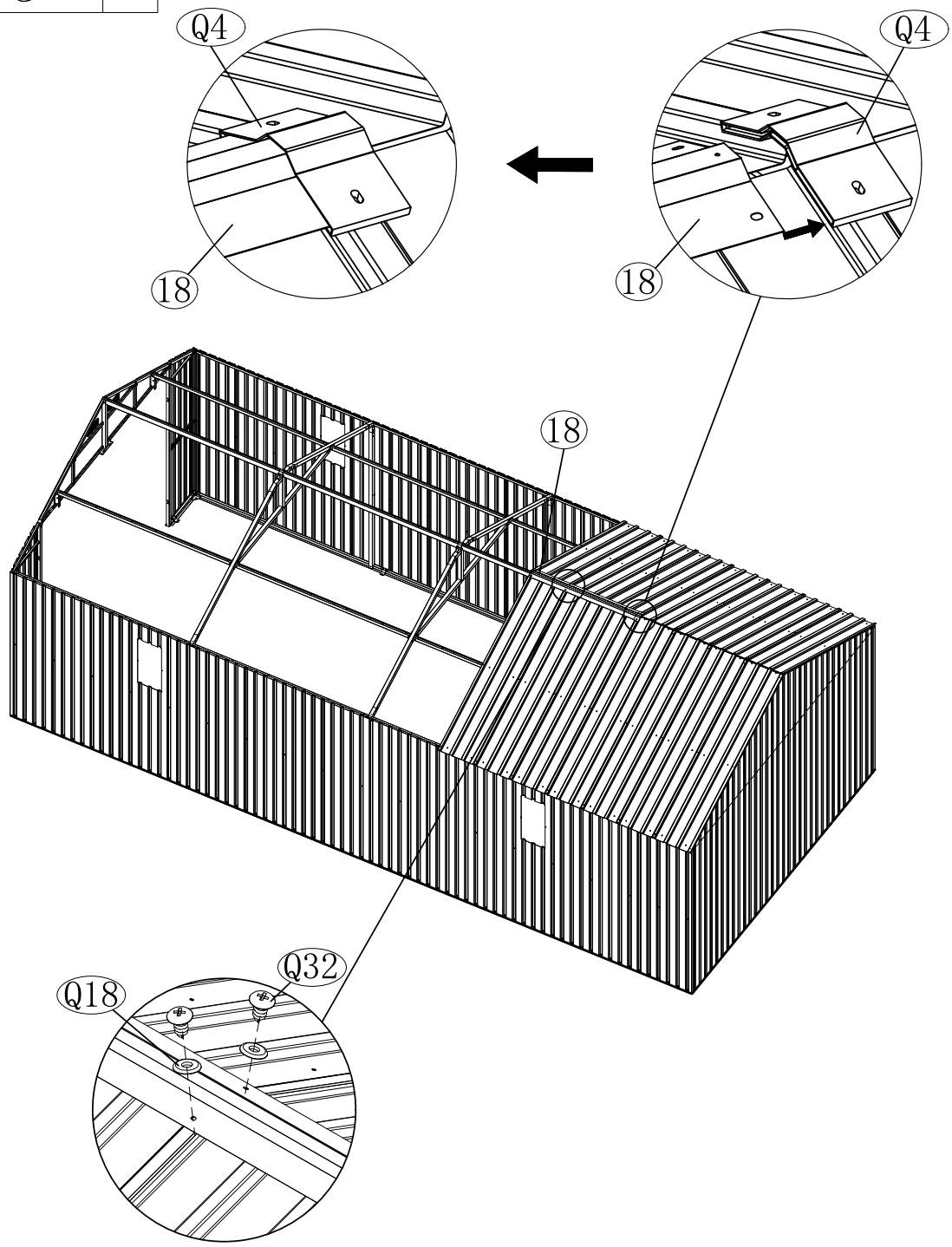

NO.	PART.	Qty.
D4	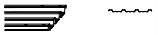	2
Q32		6
Q13		12
Q18		6
Q19		12

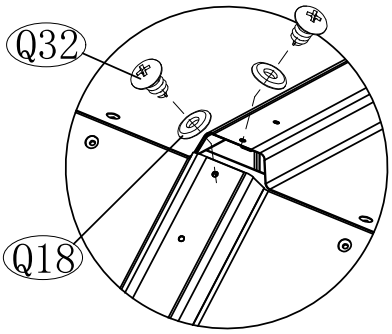

a2 x1

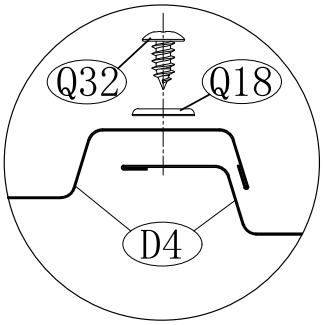

B x2

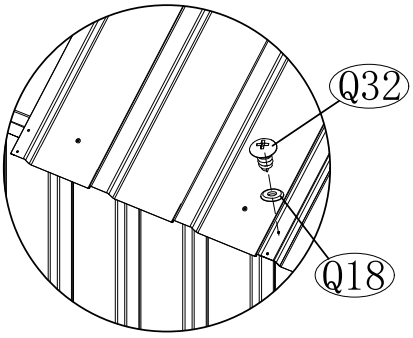

C x2

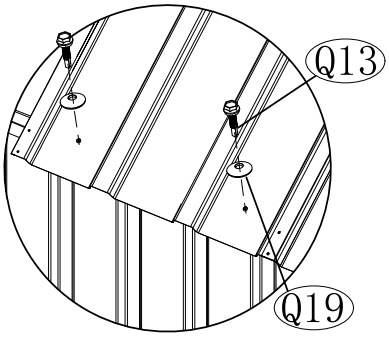

D x2

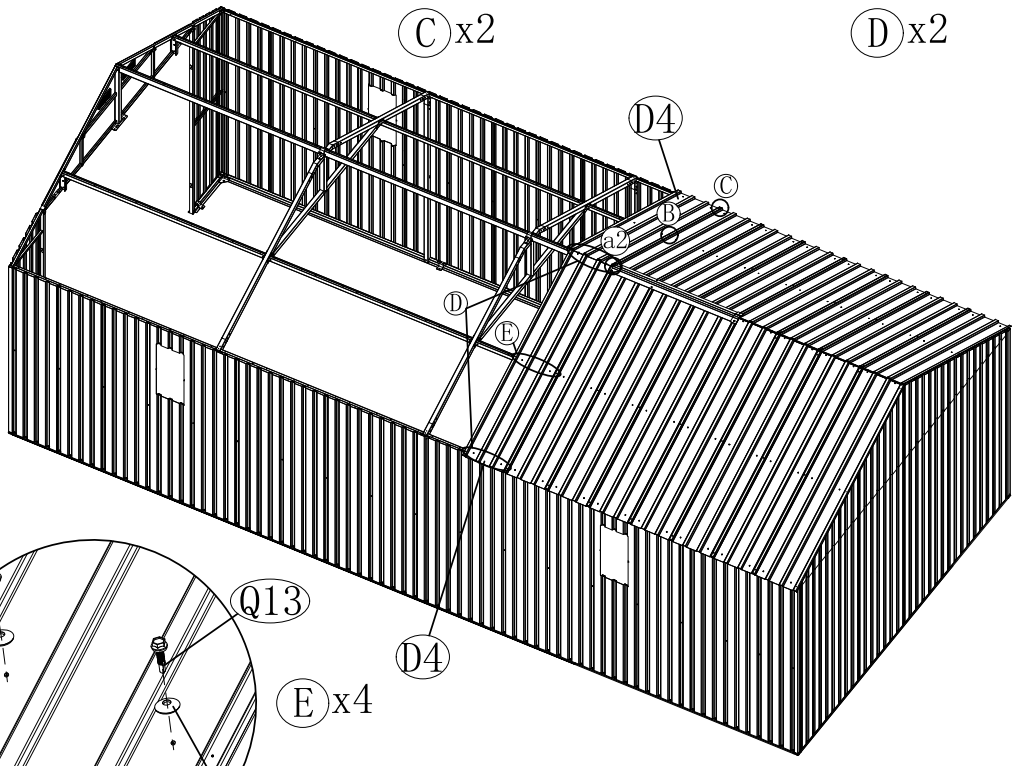

E x4

NO.	PART.	Qty.
Q4		1
Q32		2
Q18		2

Install plastic Q4 between the 6th and 7th pieces

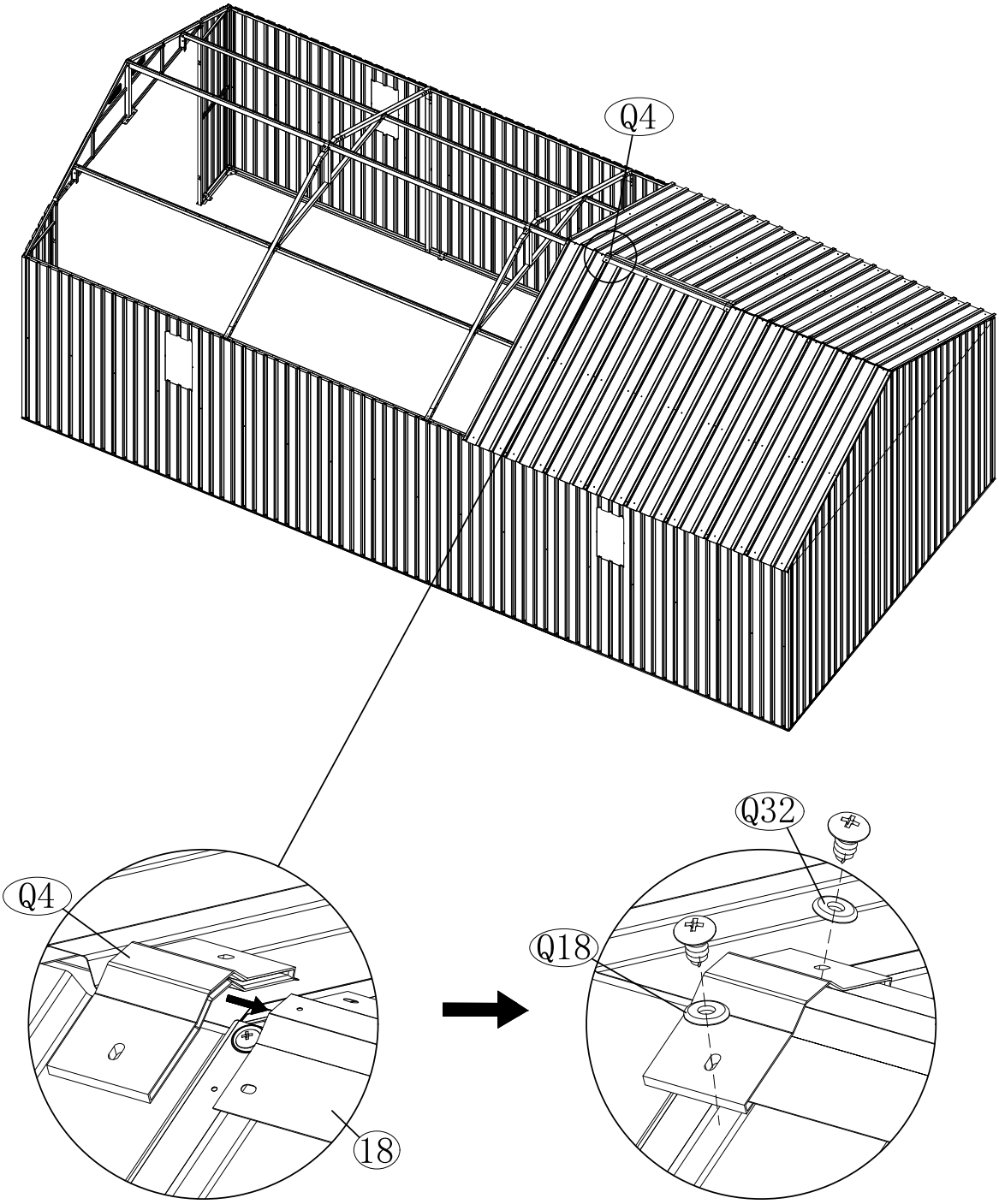

NO.	PART.	Qty.
D4		4
Q32		14
Q13		24
Q18		14
Q19		24

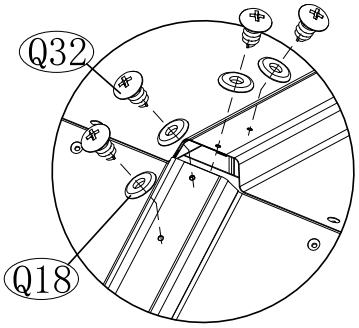

a1 x1

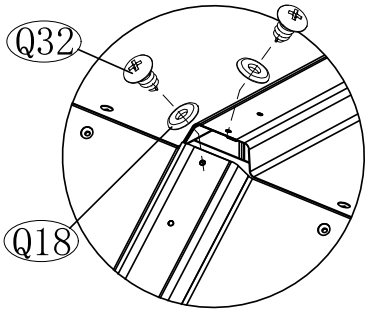

a2 x1

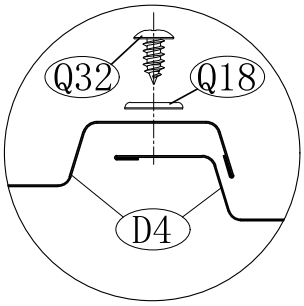

B x4

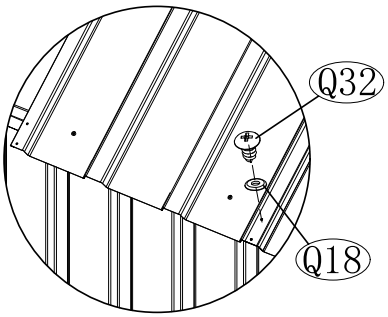

C x4

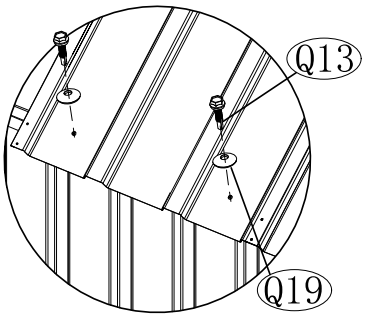

D x4

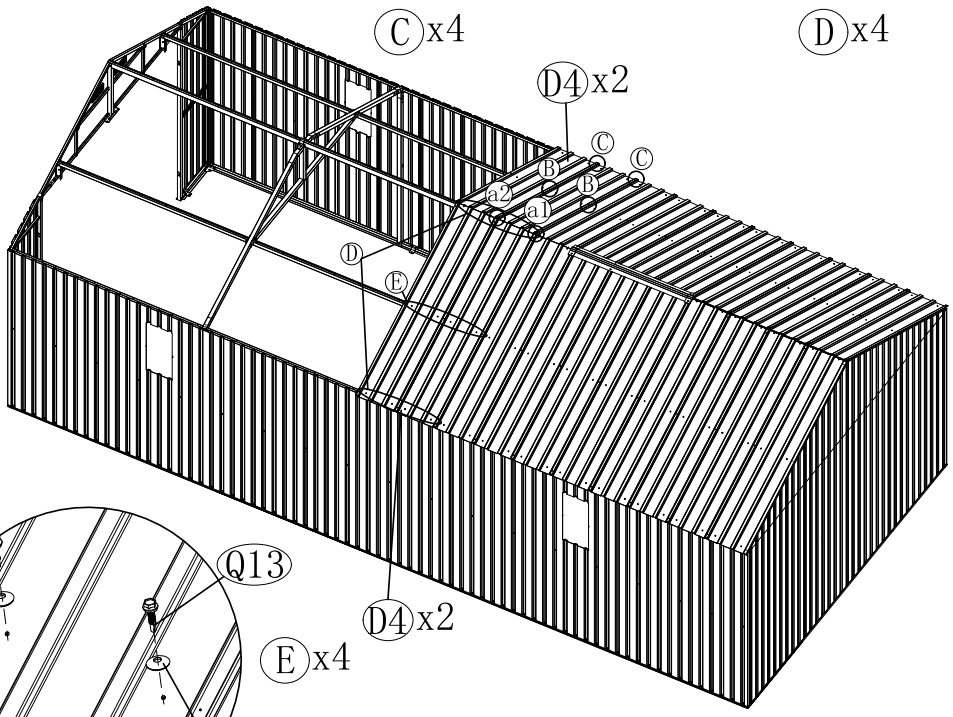

D4 x2

E x4

NO.	PART.	Qty.
18		1
Q32		2
Q18		2

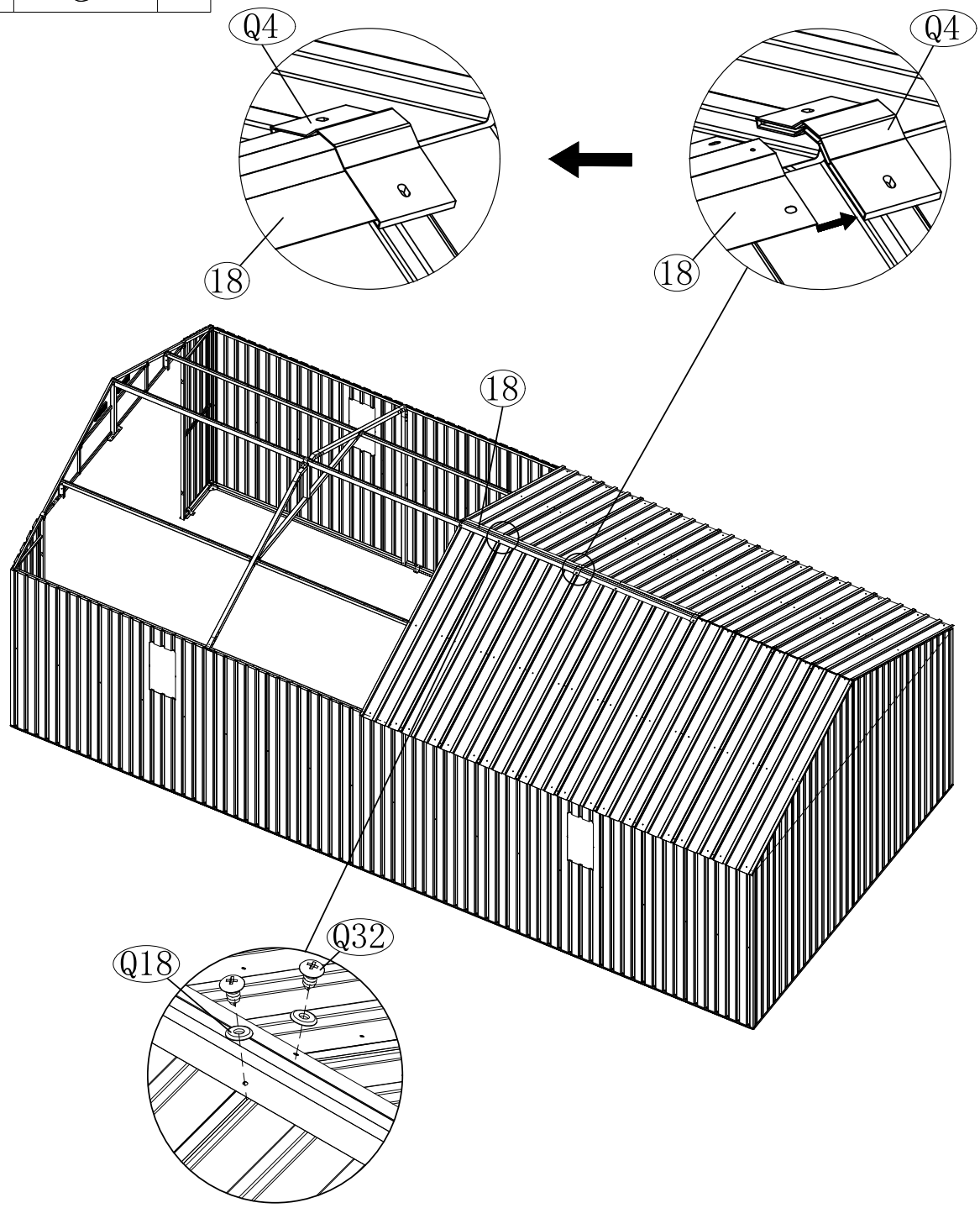

NO.	PART.	Qty.
D4		2
Q32		6
Q13		12
Q18		6
Q19		12

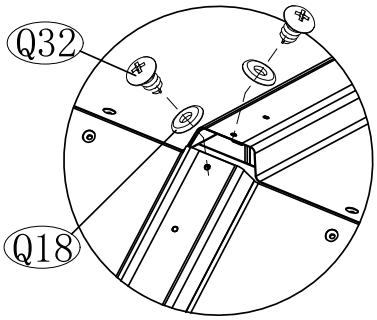

a2 x1

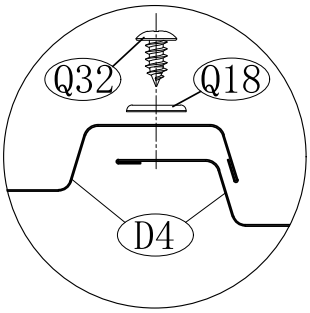

B x2

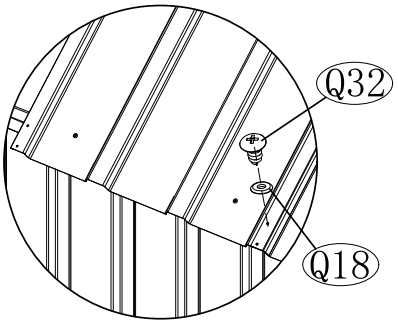

C x2

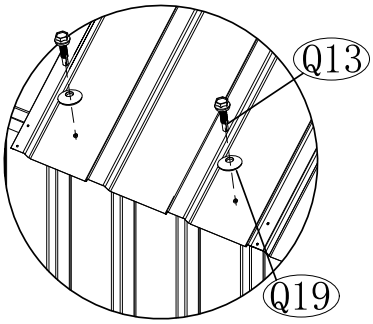

D x2

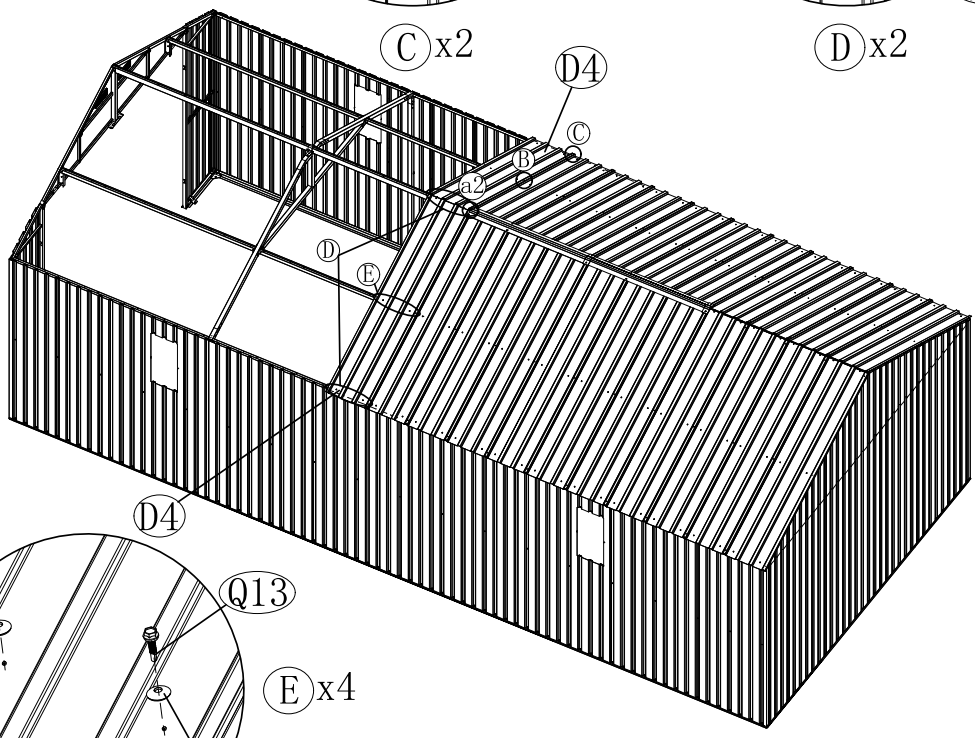

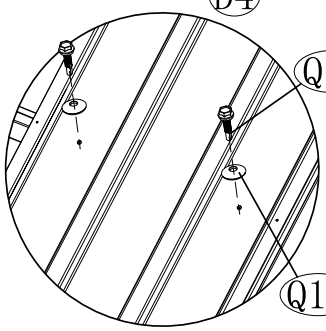

E x4

NO.	PART.	Qty.
Q4		1
Q32		2
Q18		2

Install plastic Q4 between the 9th and 10th pieces

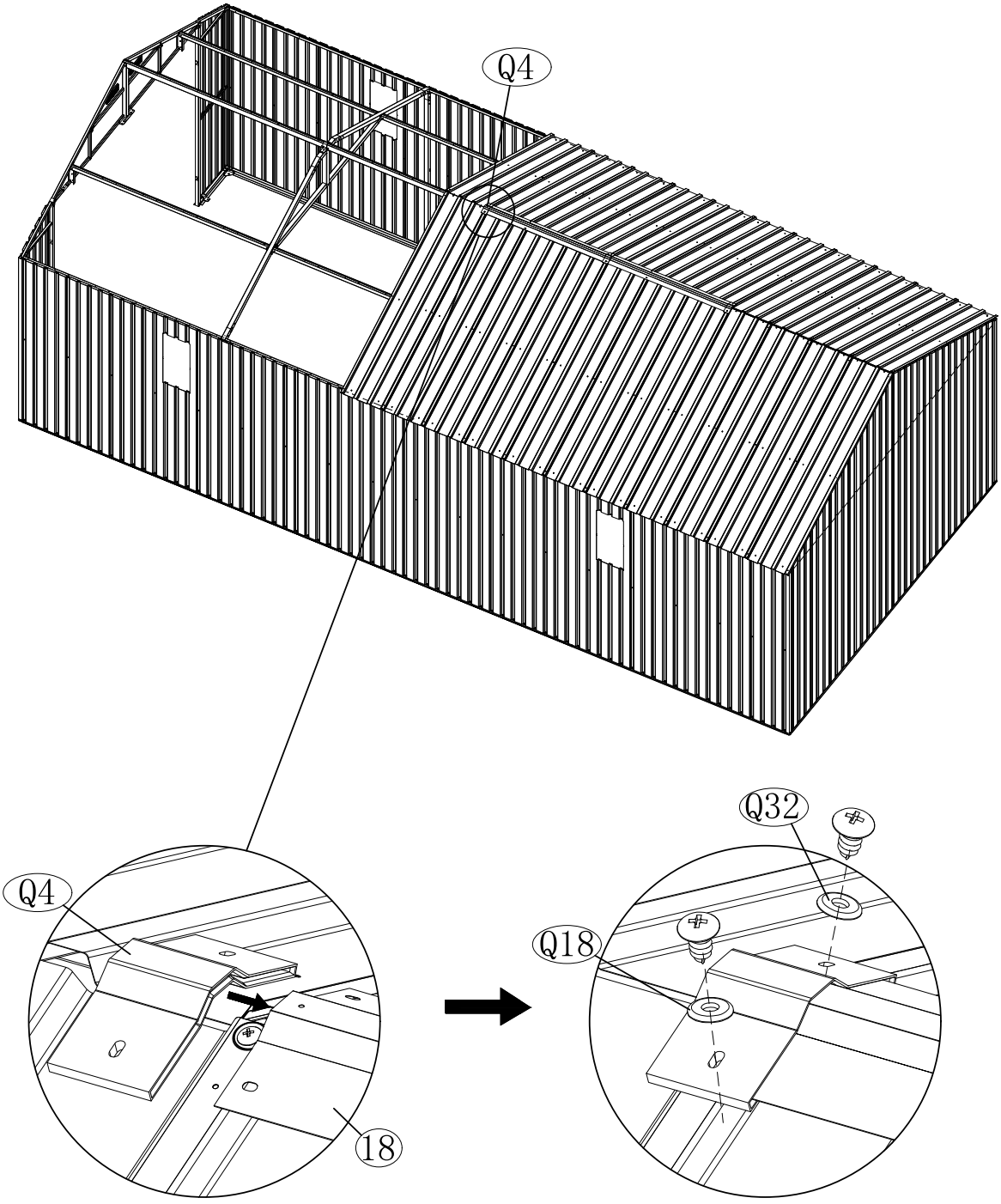

NO.	PART.	Qty.
D4		4
Q32		14
Q13		24
Q18		14
Q19		24

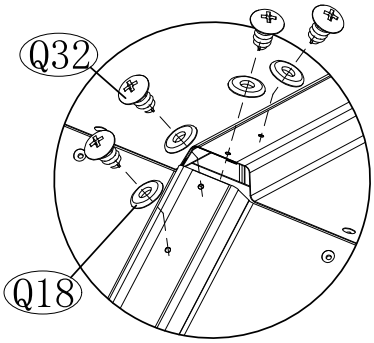

a1 x1

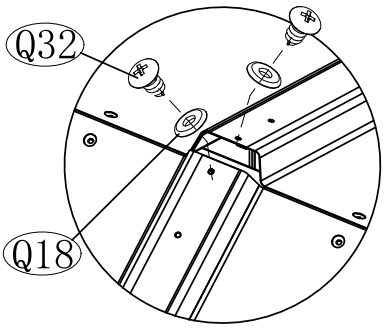

a2 x1

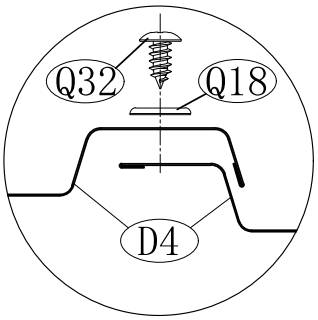

B x4

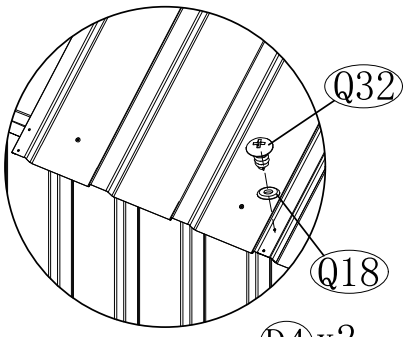

C x4

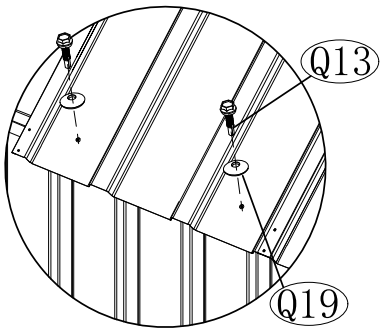

D x4

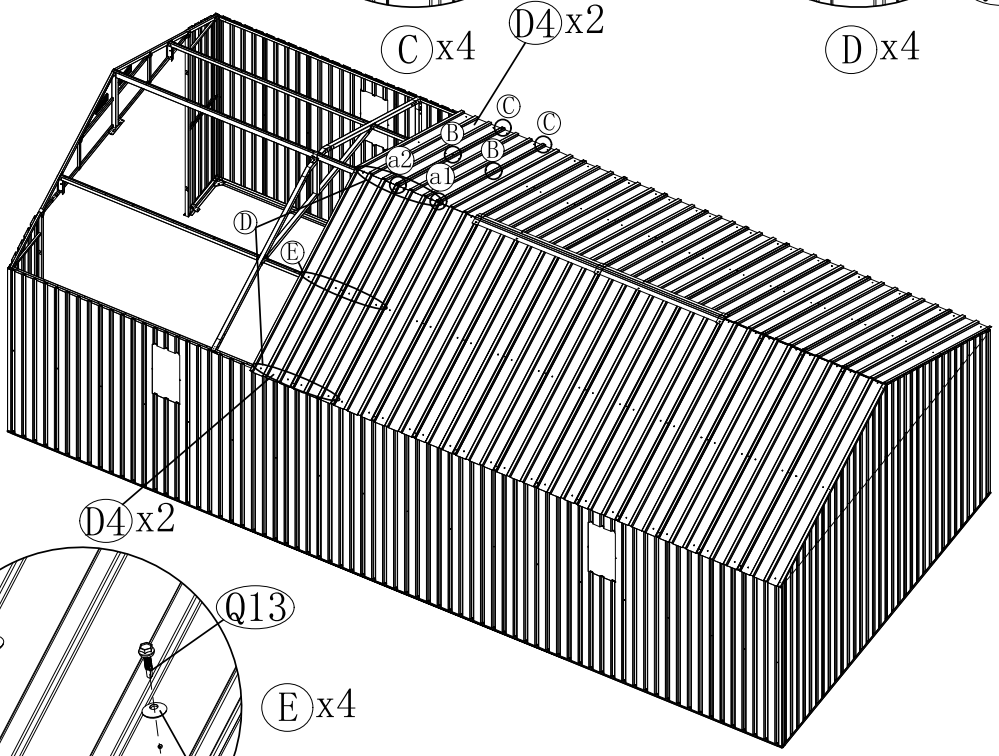

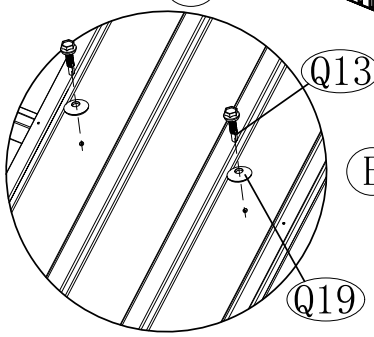

E x4

NO.	PART.	Qty.
18		1
Q32		2
Q18		2

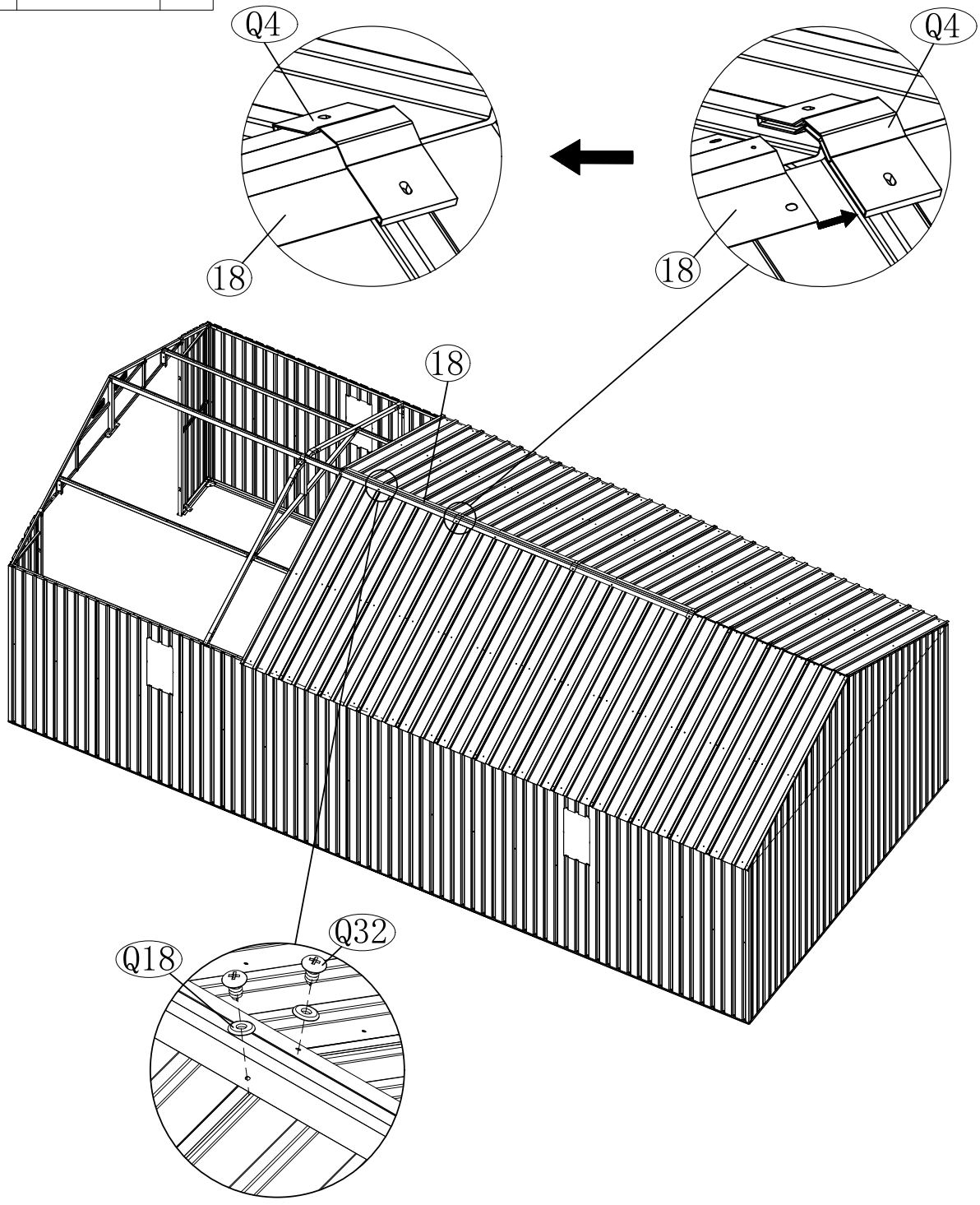

NO.	PART.	Qty.
D4		2
Q32		6
Q13		12
Q18		6
Q19		12

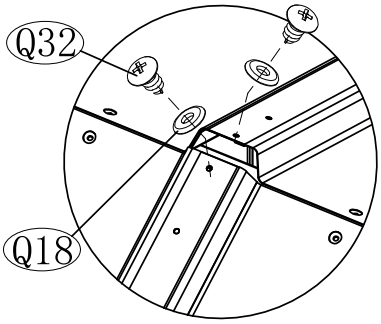

a2 x1

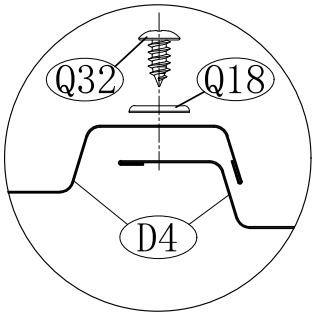

B x2

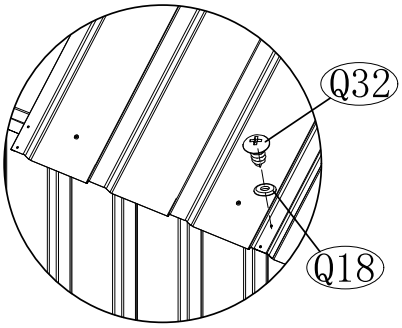

C x2

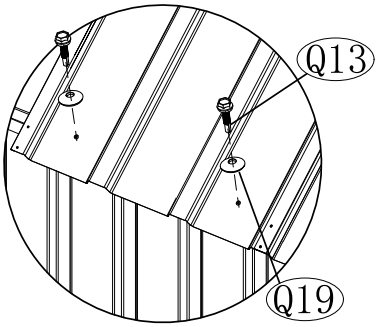

D x2

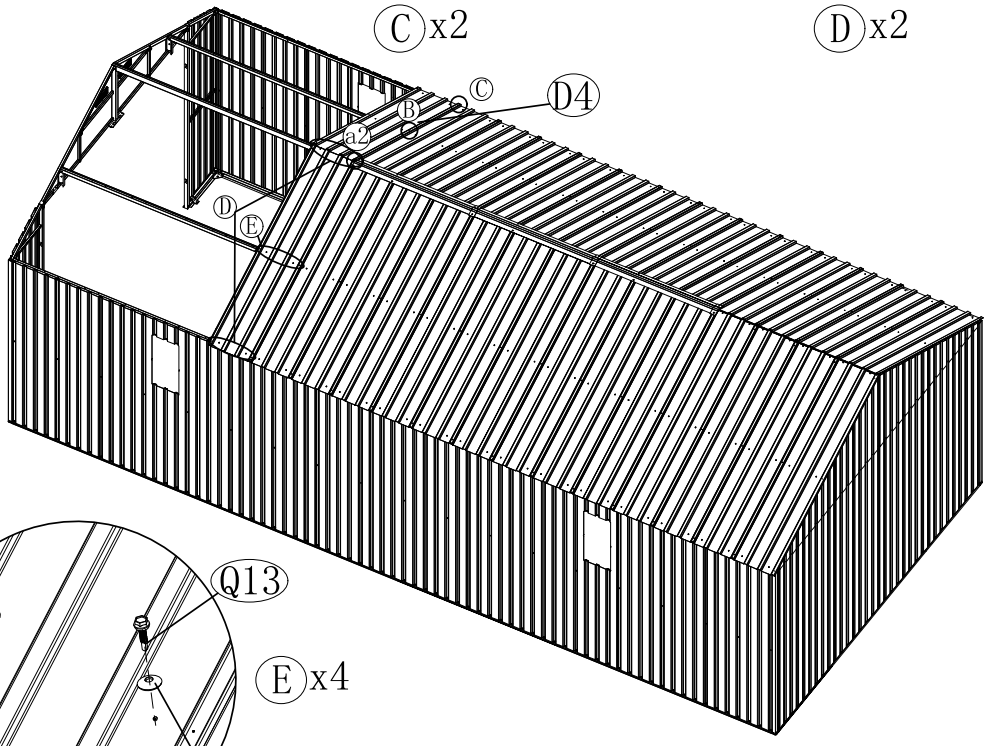

E x4

NO.	PART.	Qty.
Q4		1
Q32		2
Q18		2

Install plastic Q4 between the 12th and 13th pieces

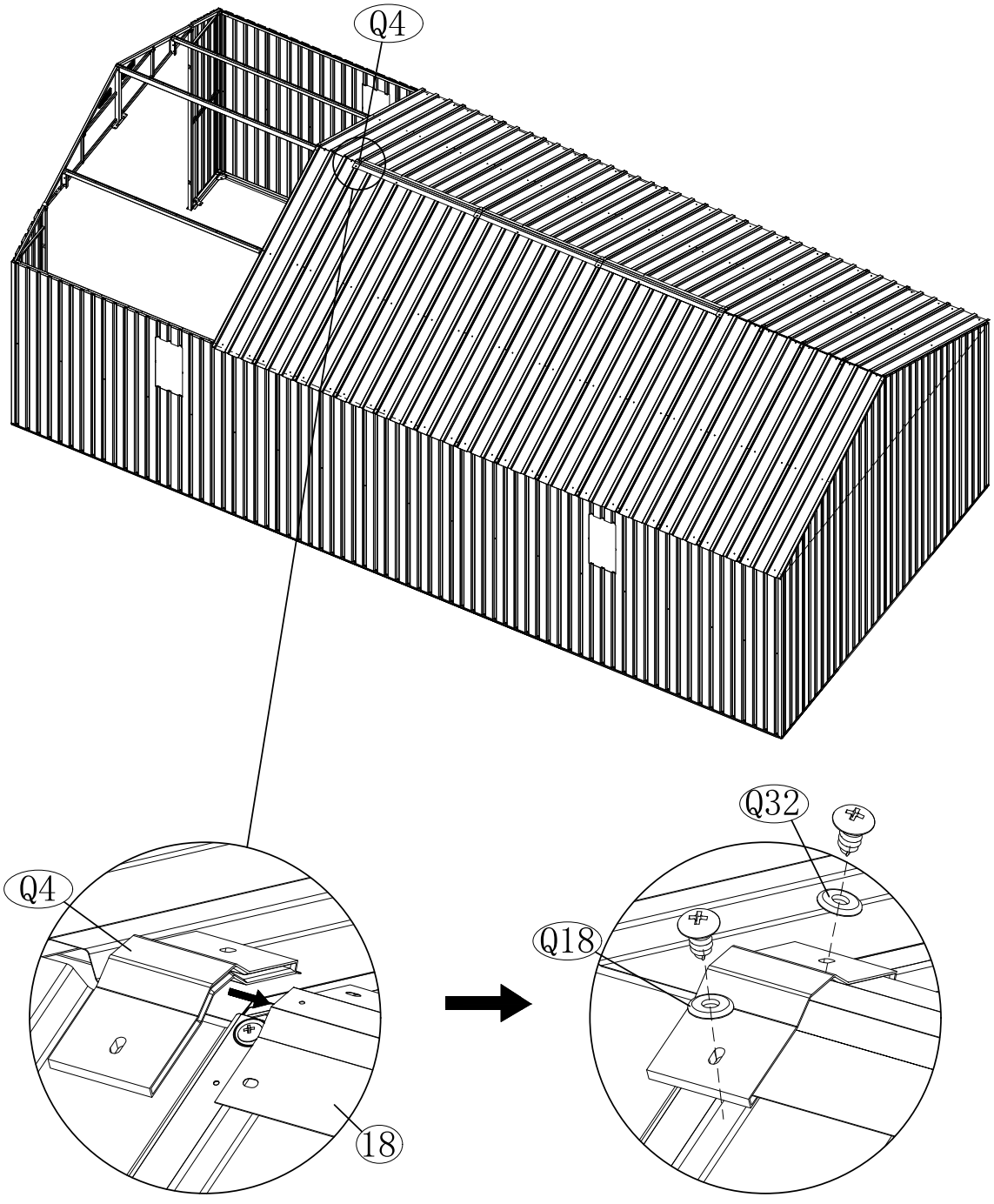

NO.	PART.	Qty.
D4		4
Q32		14
Q13		24
Q18		14
Q19		24

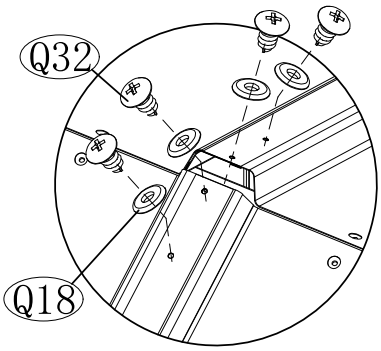

a1 x1

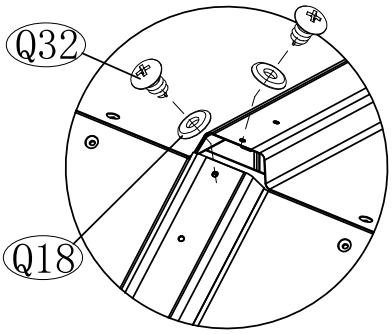

a2 x1

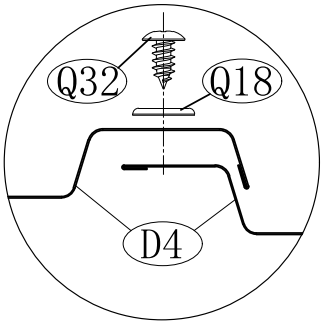

B x4

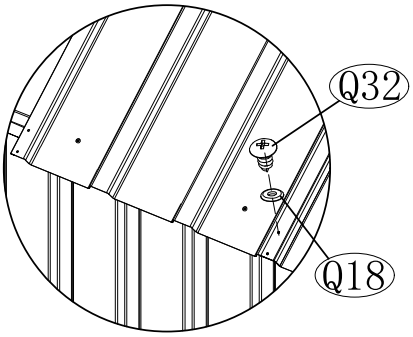

C x4

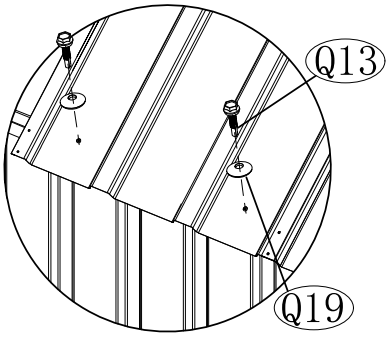

D x4

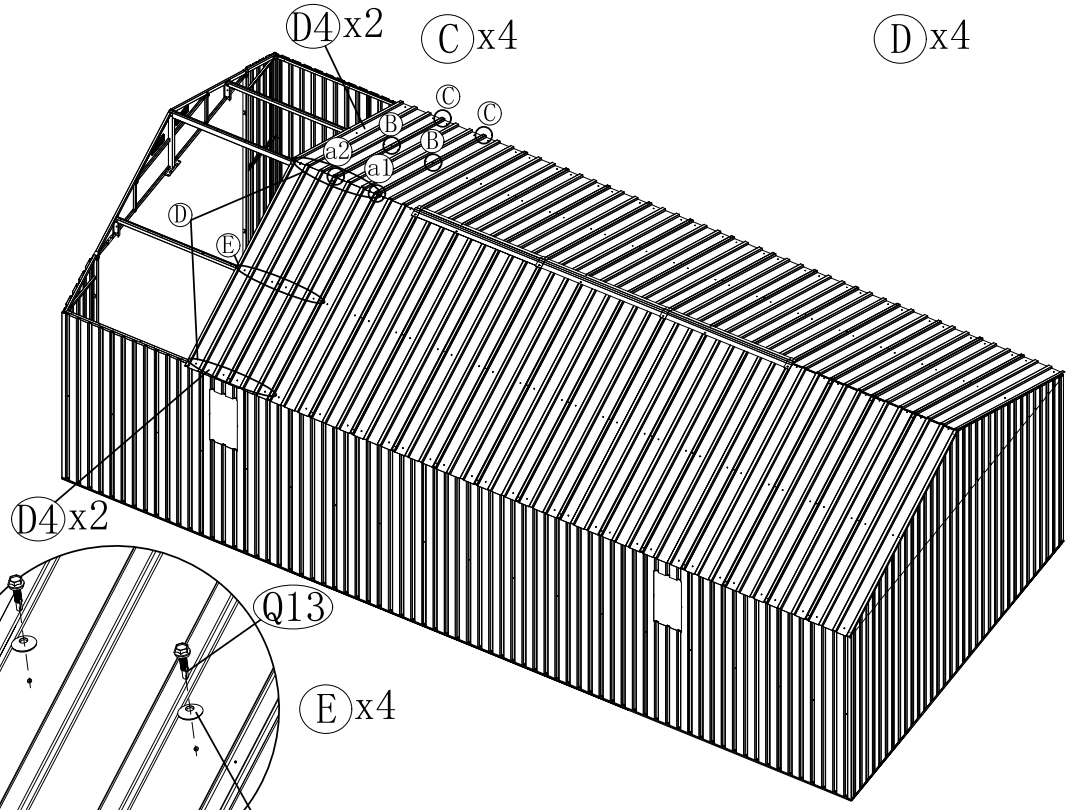

E x4

NO.	PART.	Qty.
18		1
Q32		2
Q18		2

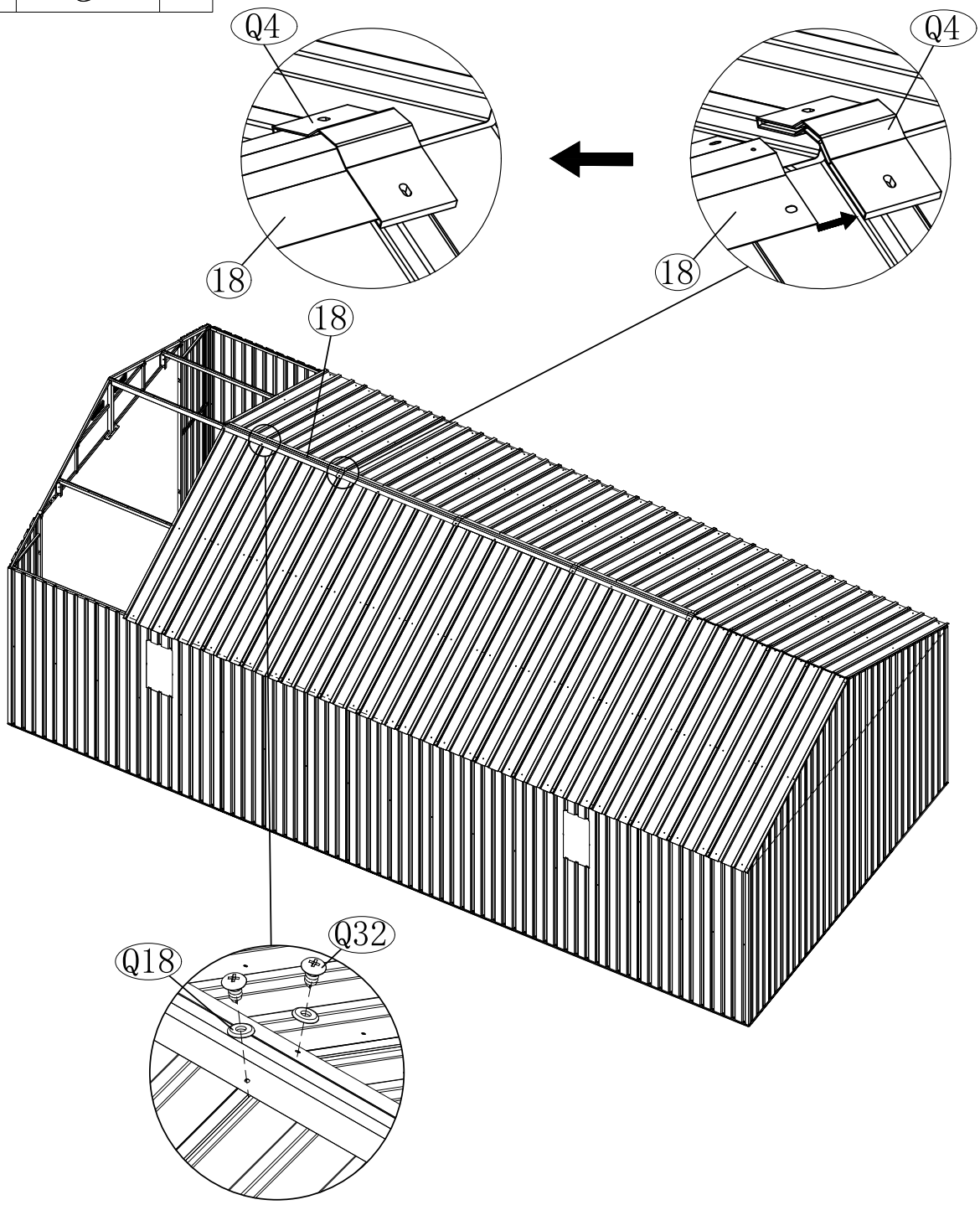

NO.	PART.	Qty.
D4	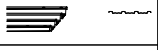	2
Q32		6
Q13		12
Q18		6
Q19		12

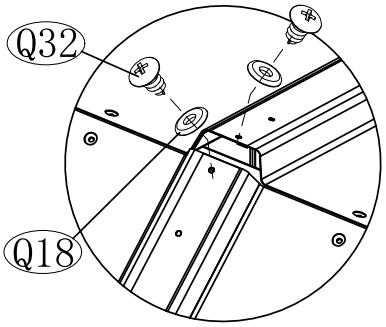

a2 x1

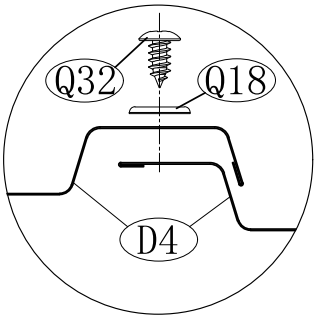

B x2

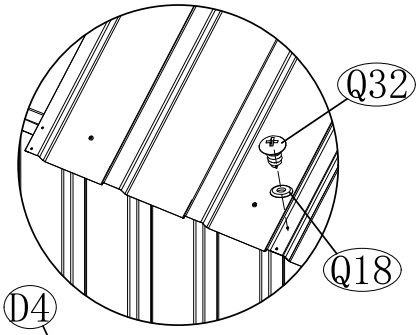

C x2

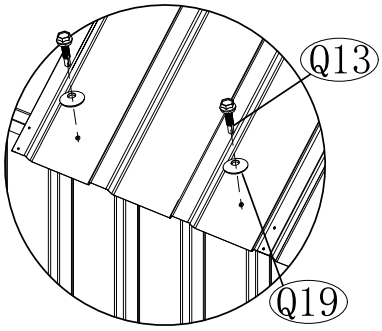

D x2

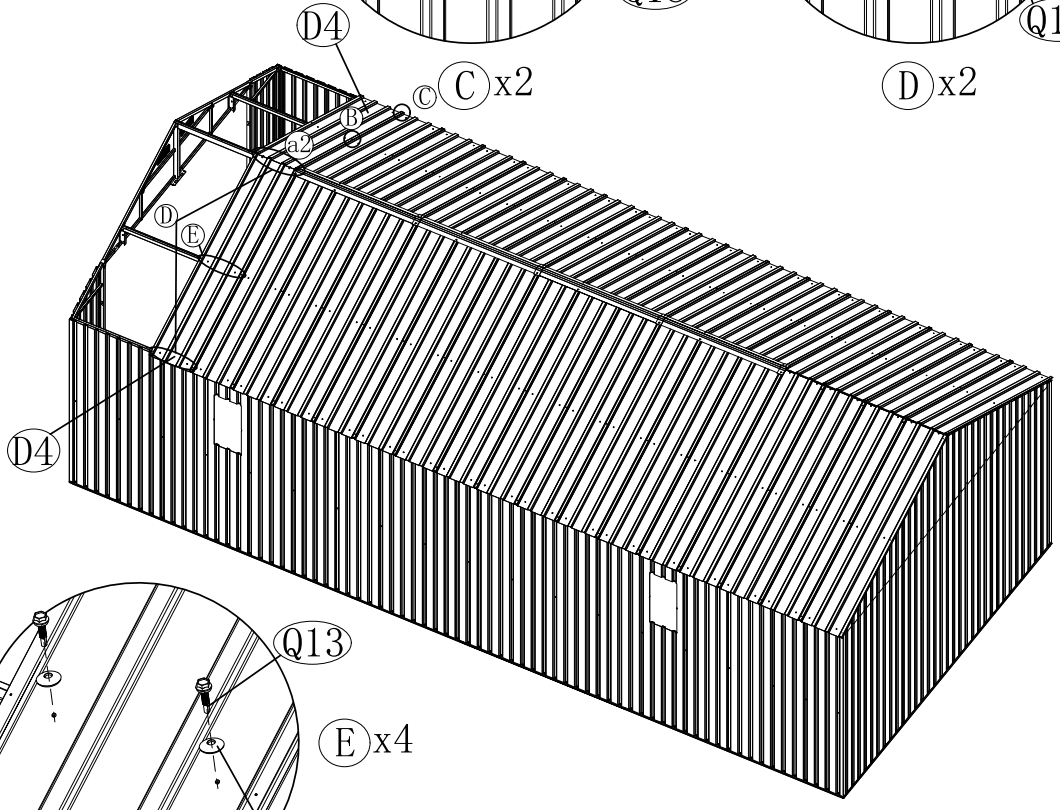

E x4

NO.	PART.	Qty.
Q4		1
Q32		2
Q18		2

Install plastic Q4 between the 12th and 13th pieces

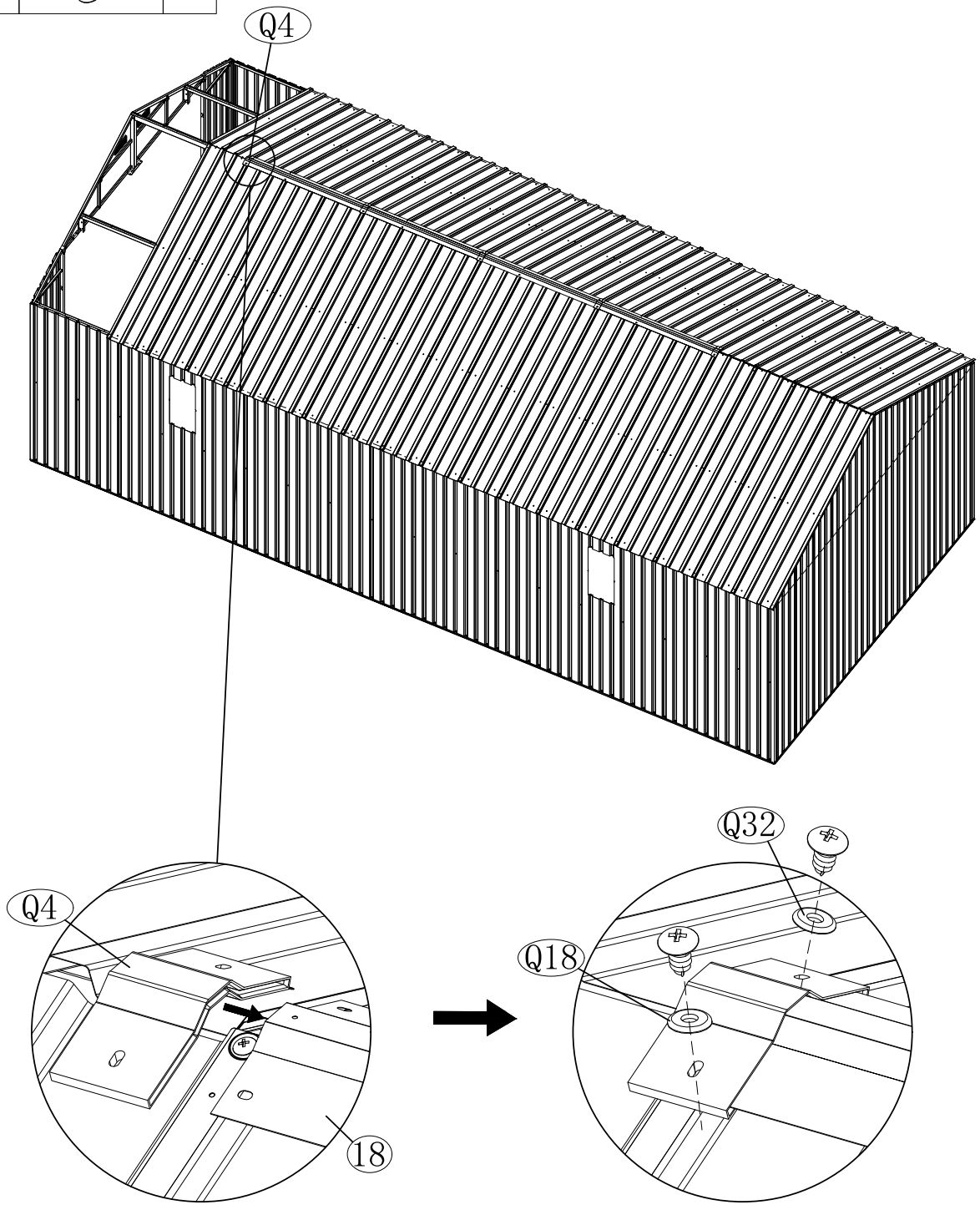

NO.	PART.	Qty.
D4		2
Q32		8
Q13		12
Q18		8
Q19		12

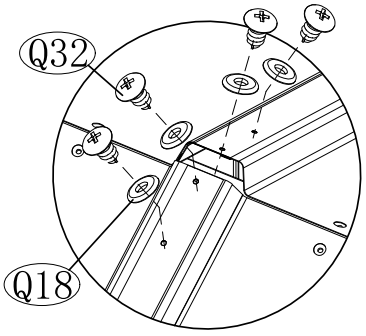

a1 x1

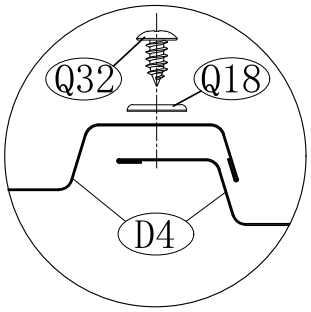

B x2

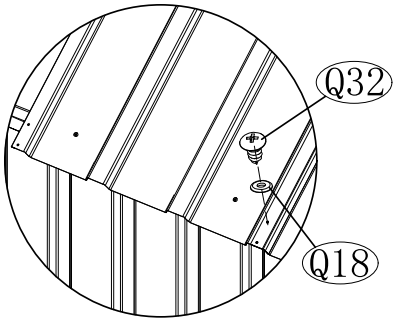

C x2

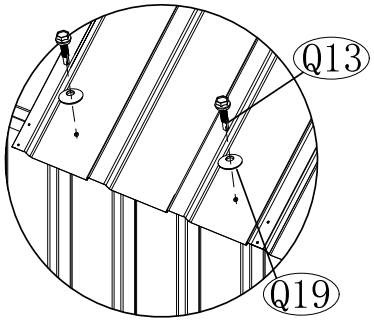

D x2

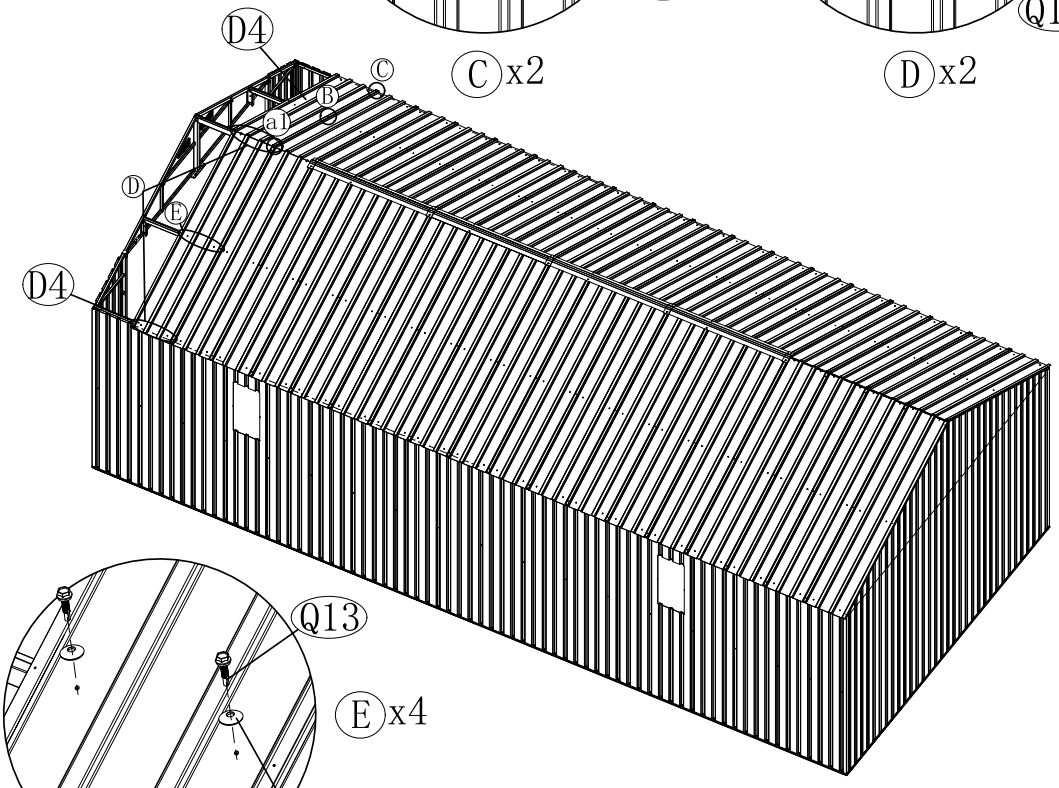

E x4

NO.	PART.	Qty.
D4		2
Q32		6
Q13		12
Q18		6
Q19		12

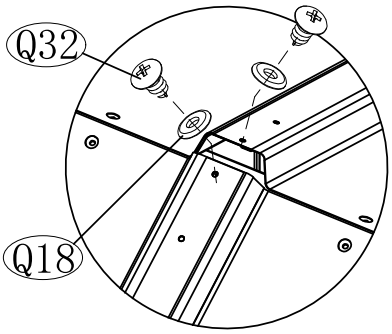

a2 x1

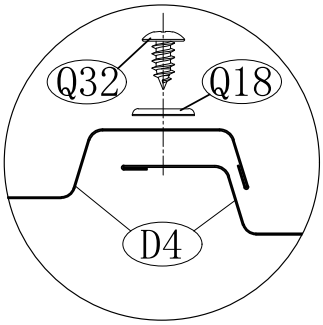

B x2

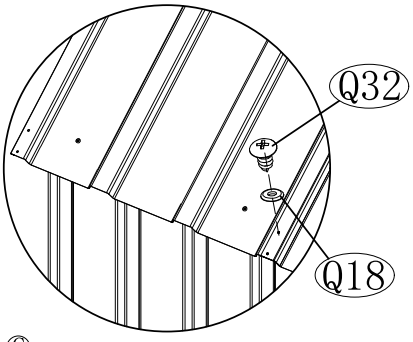

C x2

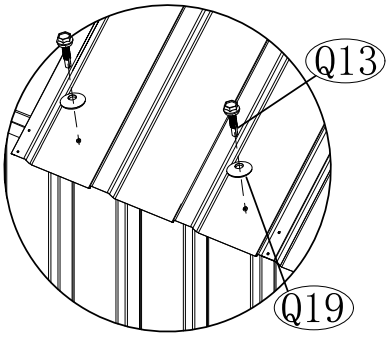

D x2

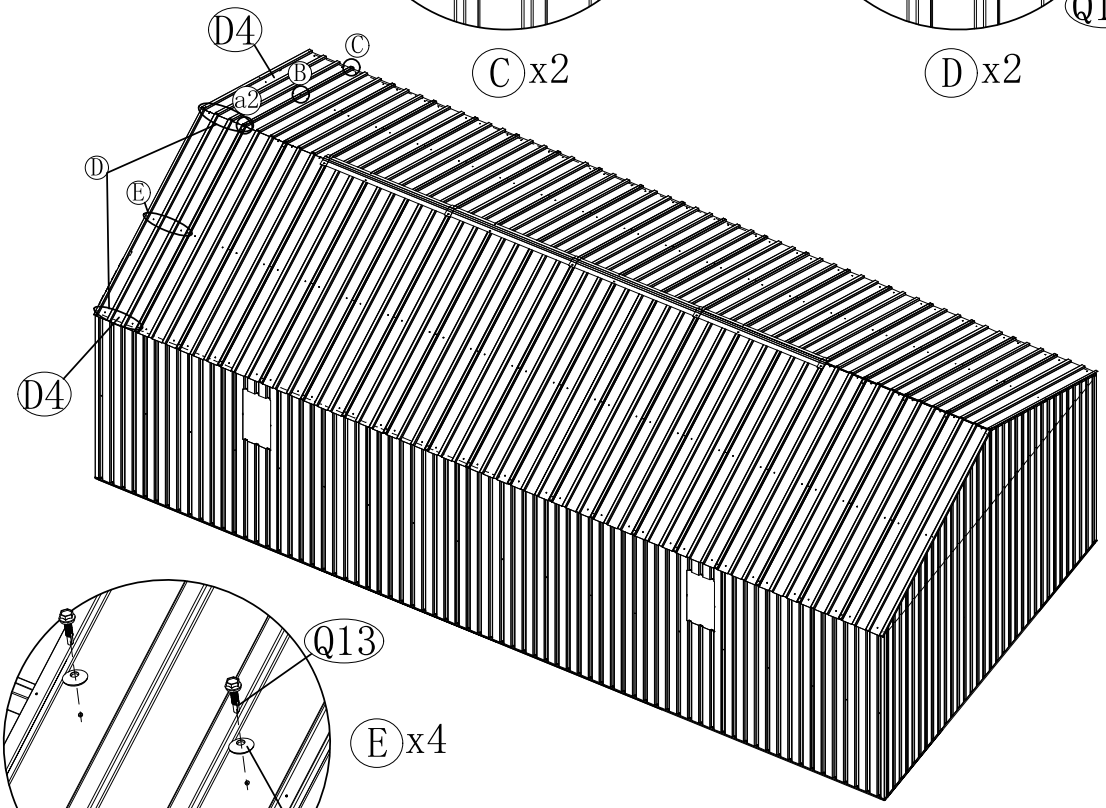

E x4

NO.	PART.	Qty.
20L		2
20R		2
Q32		12
Q18		12

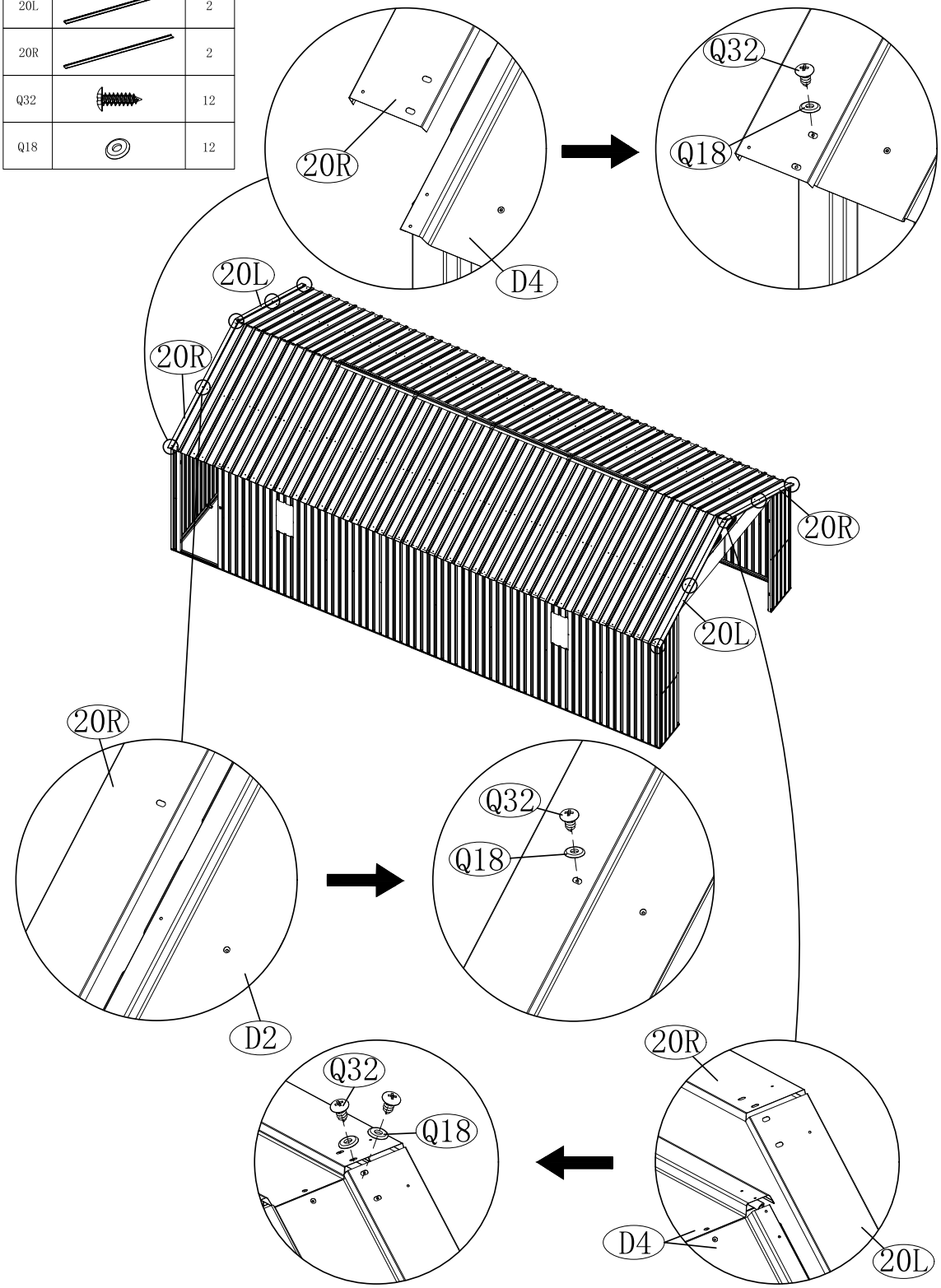

NO.	PART.	Qty.
18F		1
18B		1
Q32		4
Q18		4

NO.	PART.	Qty.
Q2		2
Q32		4
Q18		4

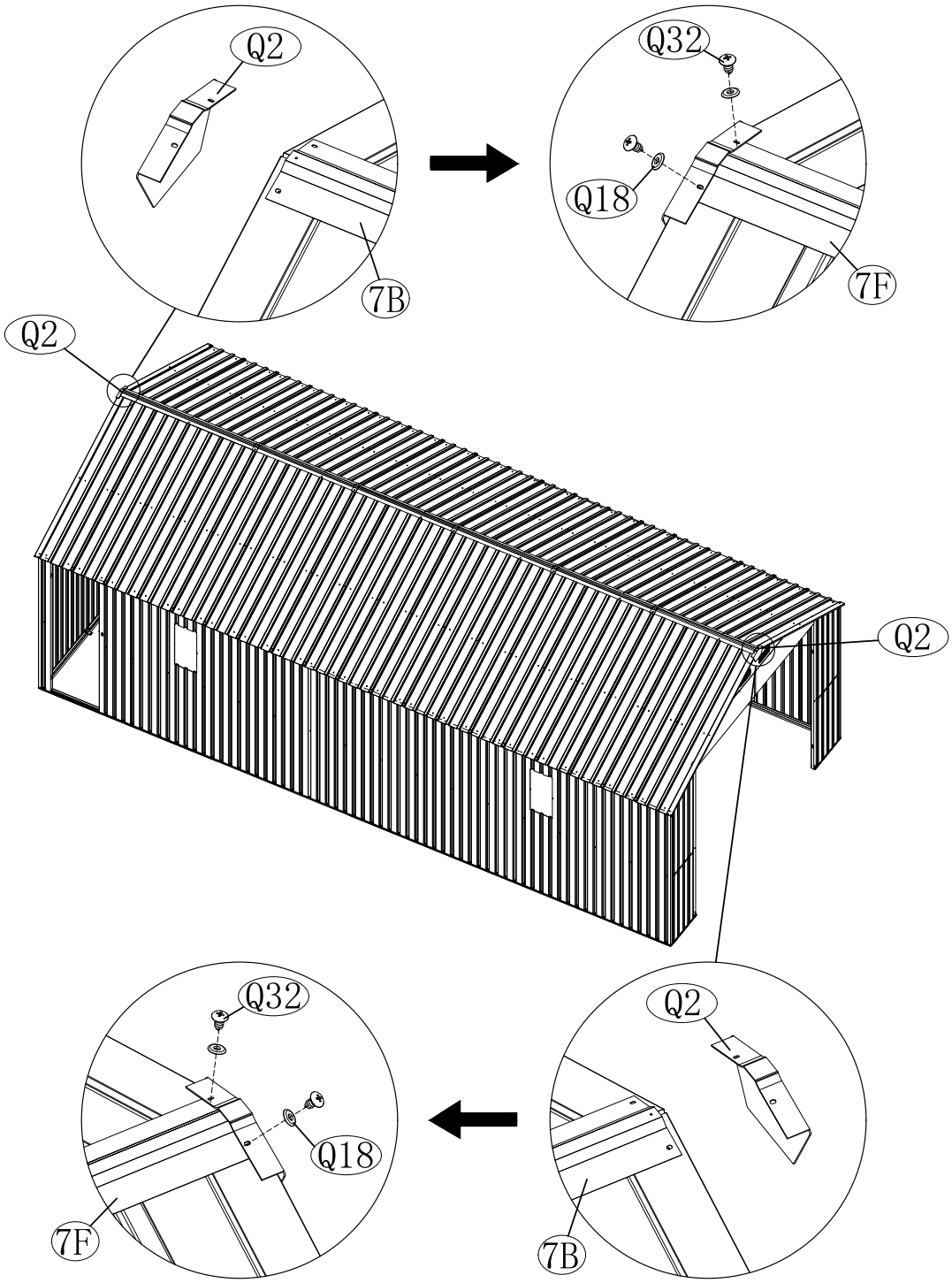

NO.	PART.	Qty.
19		4
Q3		6
Q32		22
Q18		22

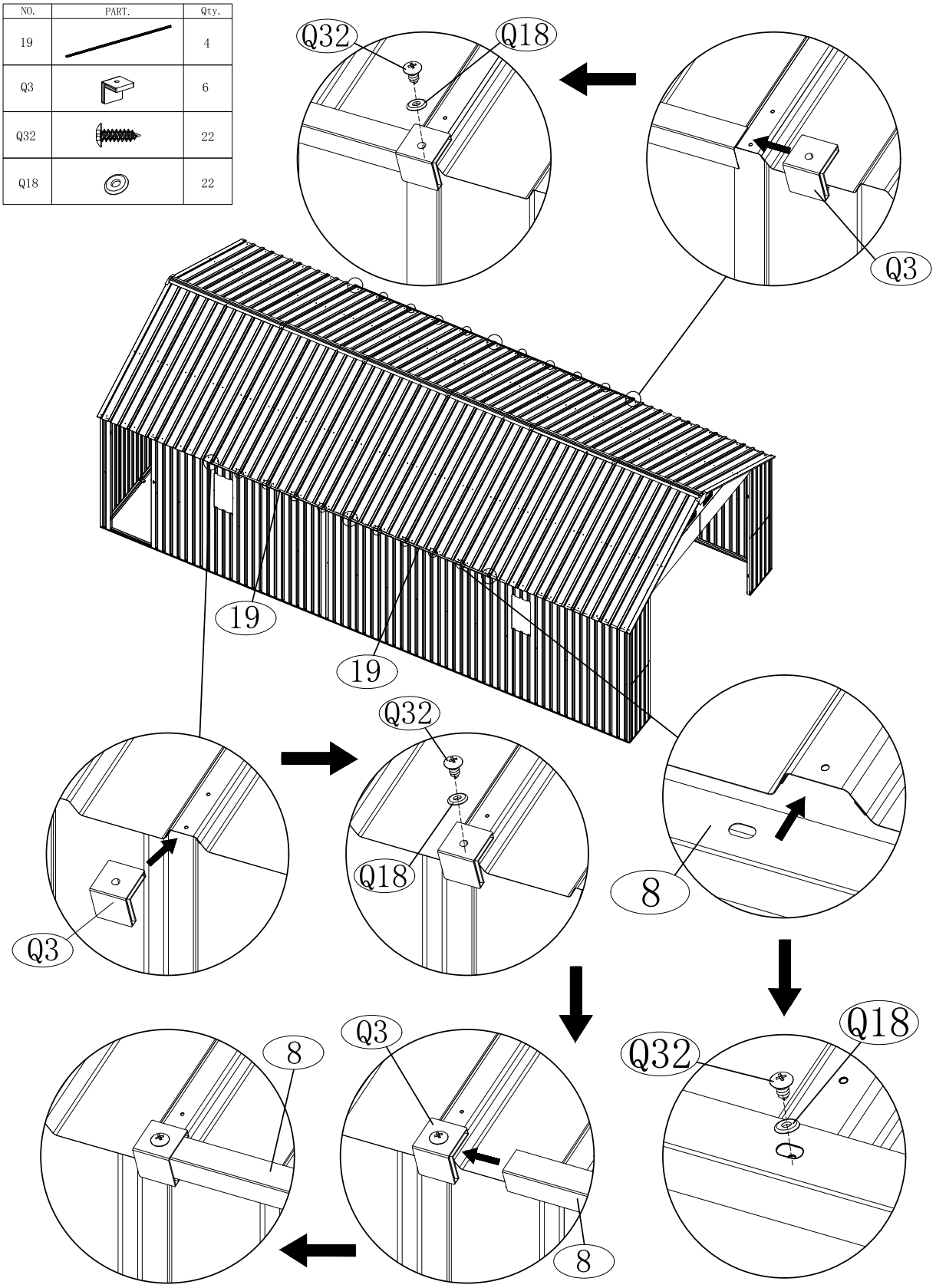

NO.	PART.	Qty.
19L		1
19R		1
19F		1
19B		1
Q1		4
Q32		22
Q18		22

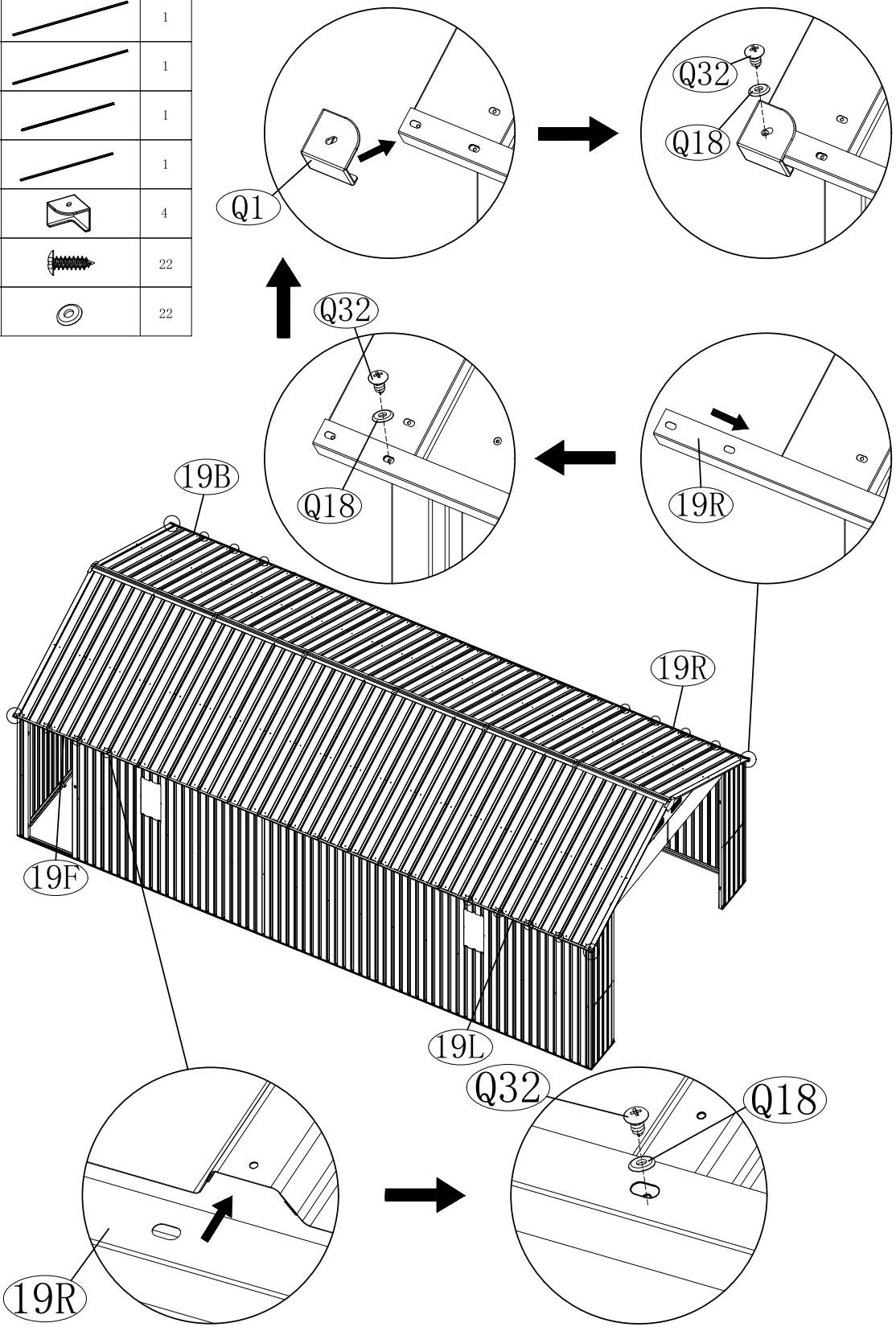

NO.	PART.	Qty.
F12	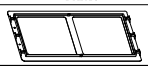	4
F13		4
F14	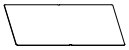	4
41		4
Q32		32
Q18		32

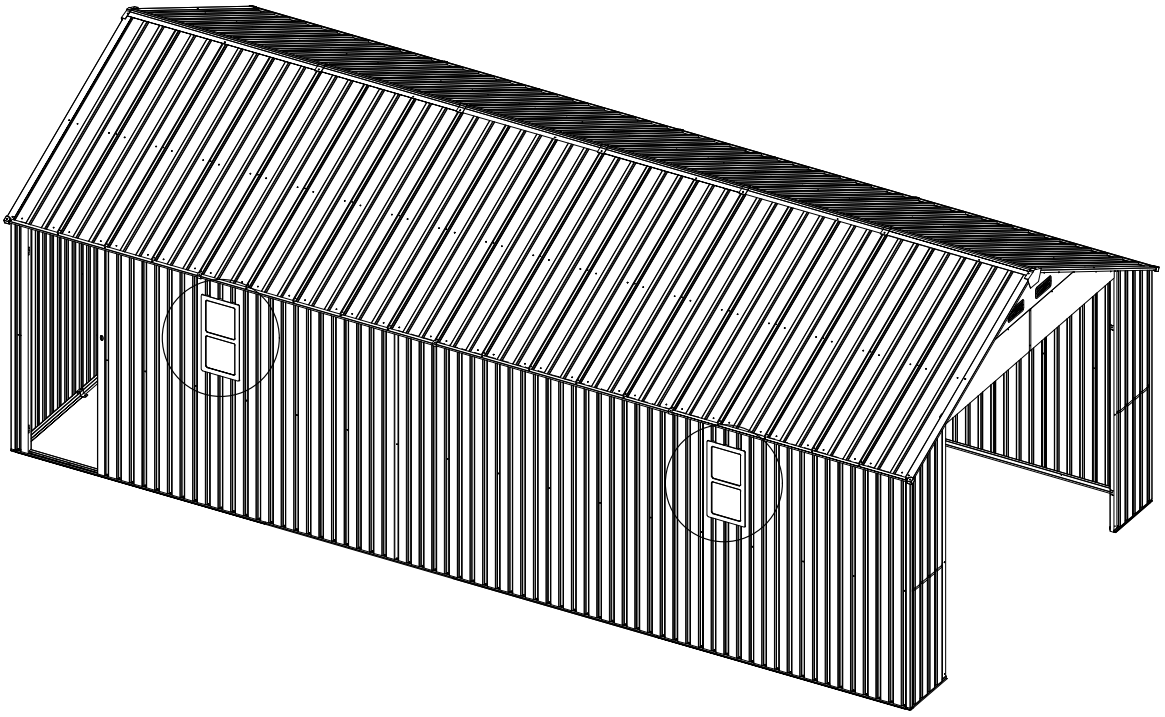

Detailed steps are on the next page.

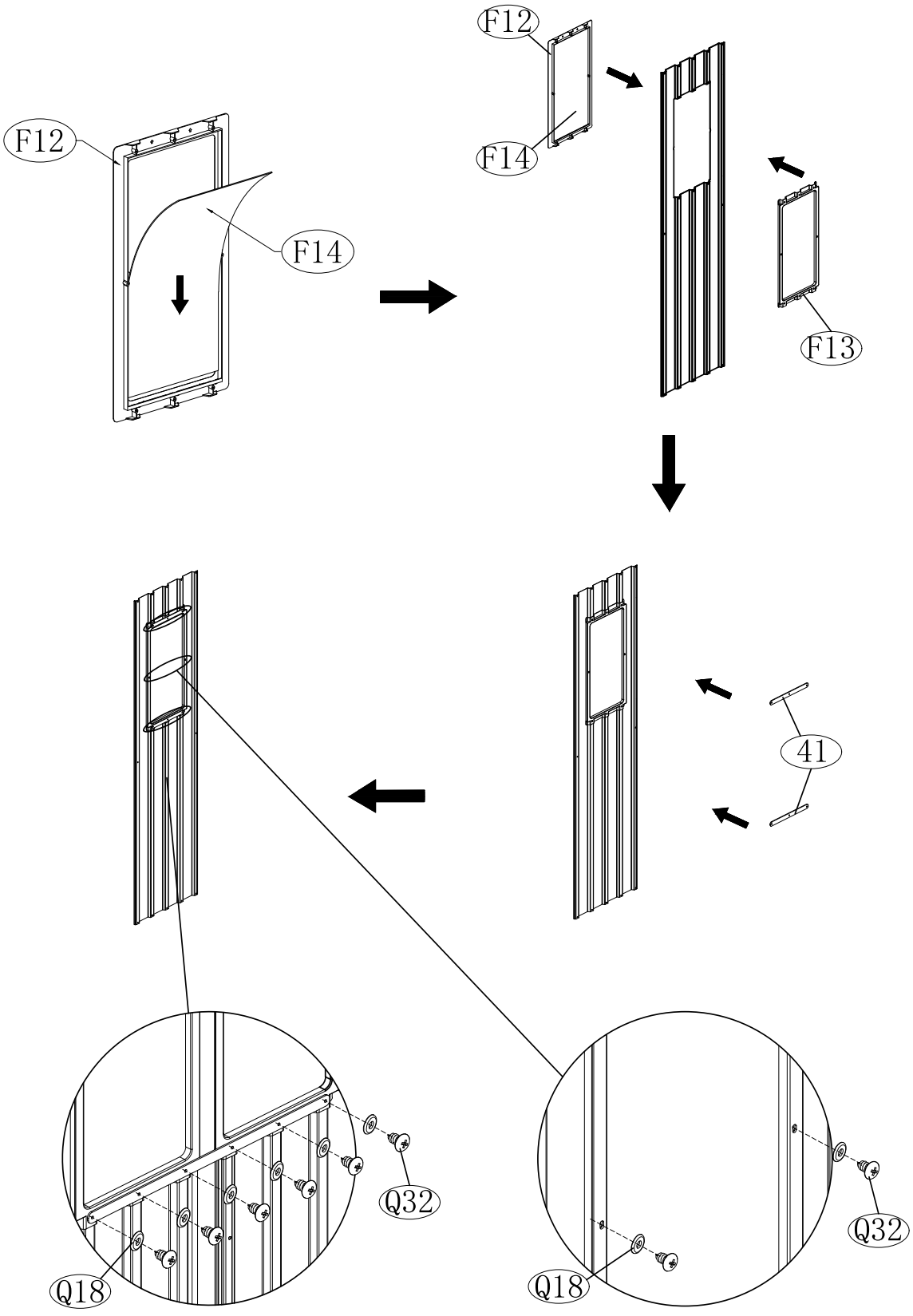
F12
F14
F12
F14
F13
41
Q32
Q18
Q18
Q32

NO.	PART.	Qty.
53		2
54		2
55		3
56		1
57		2
Q10		48

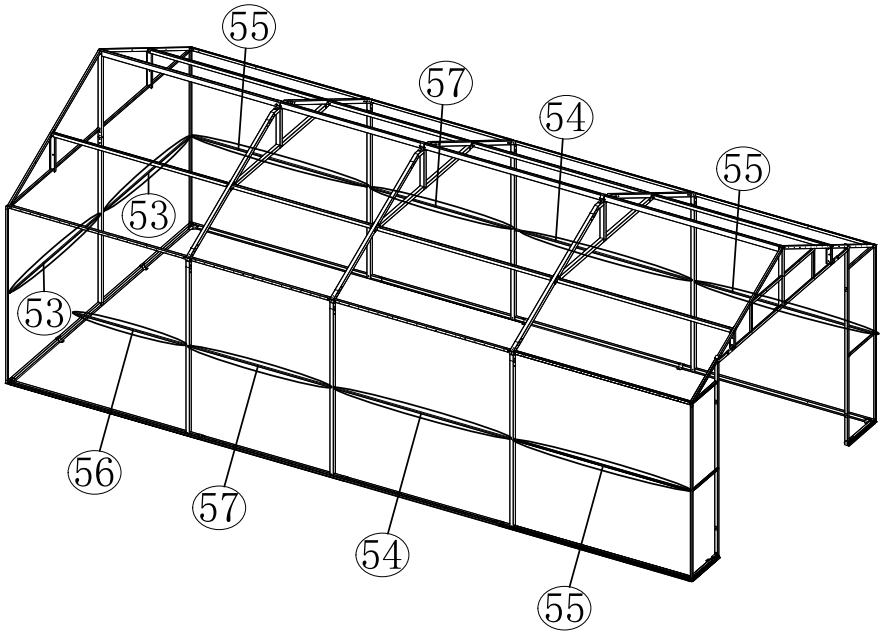

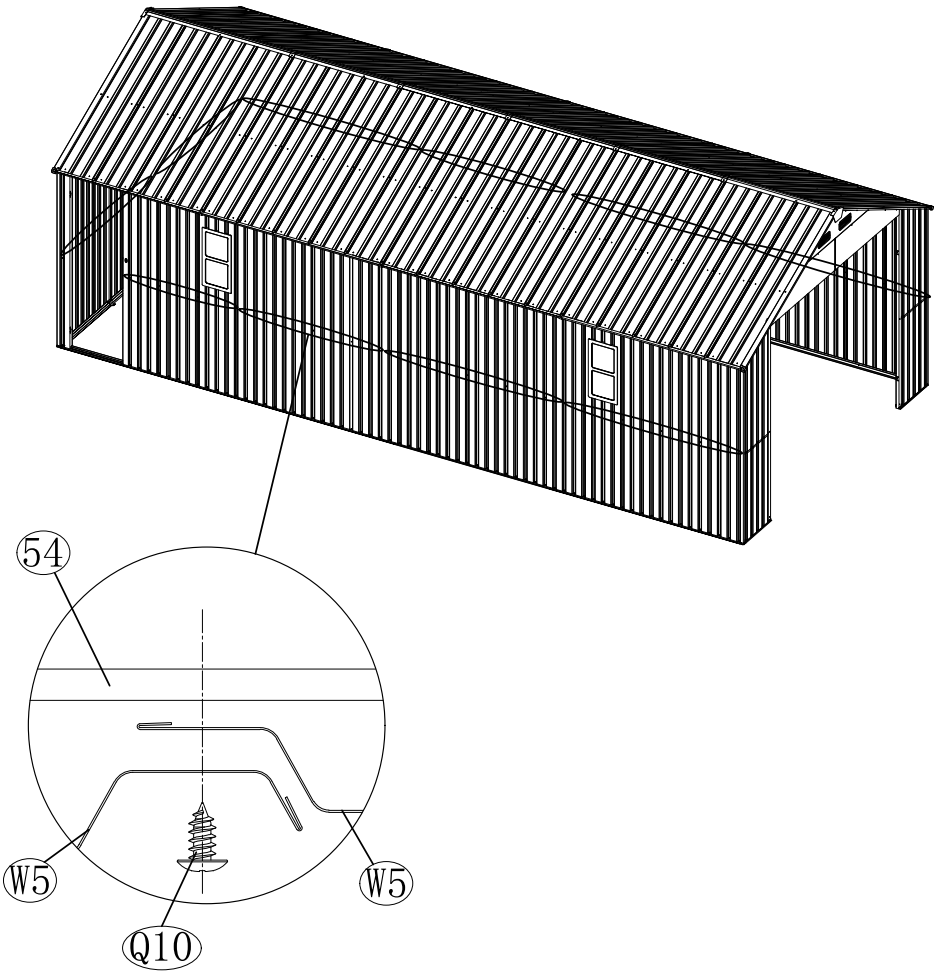

NO.	PART.	Qty.
16	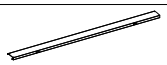	2
47		4
Q33A		4
Q38		20
Q54		20

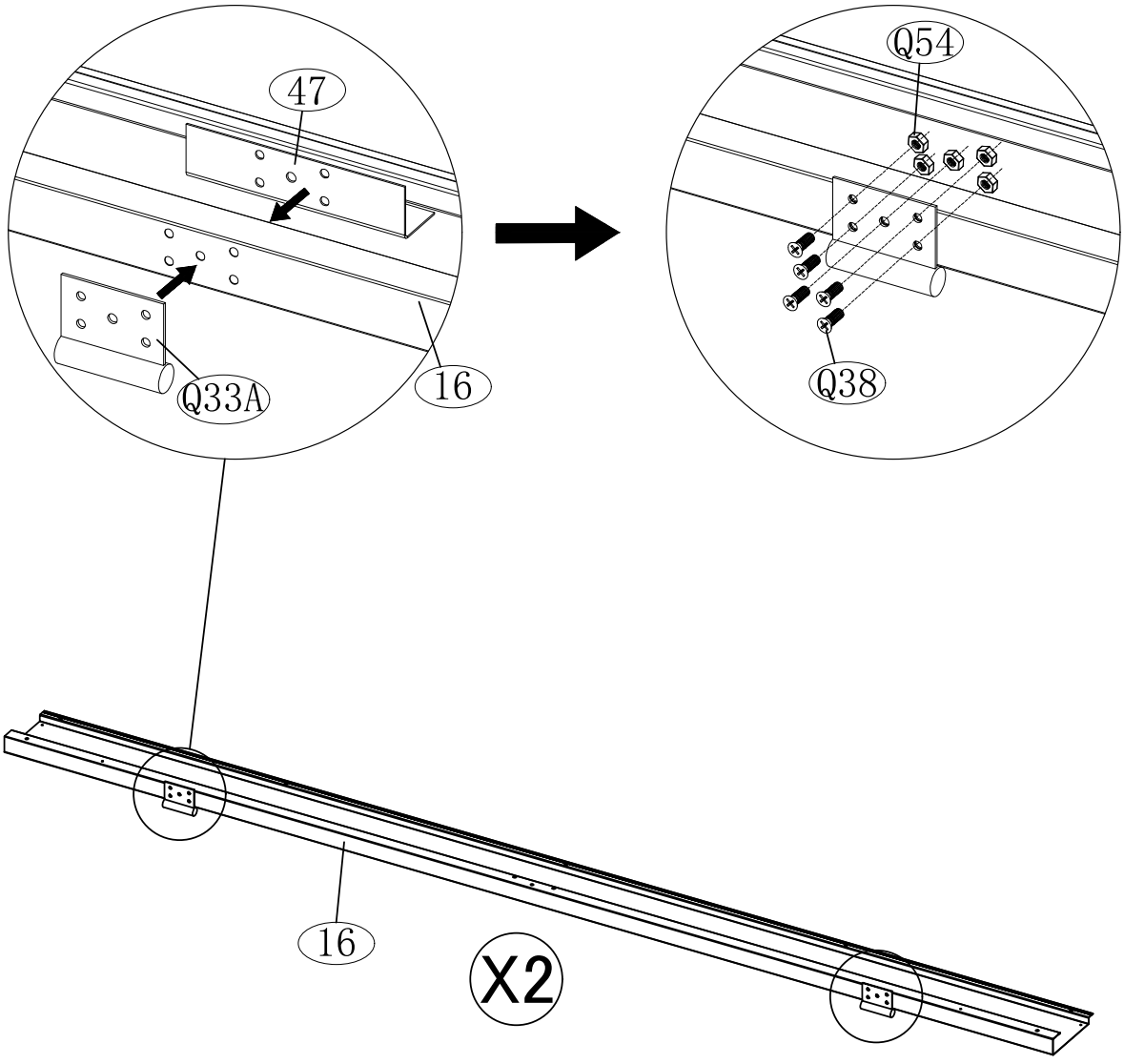

NO.	PART.	Qty.
22	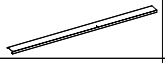	1
M1		3

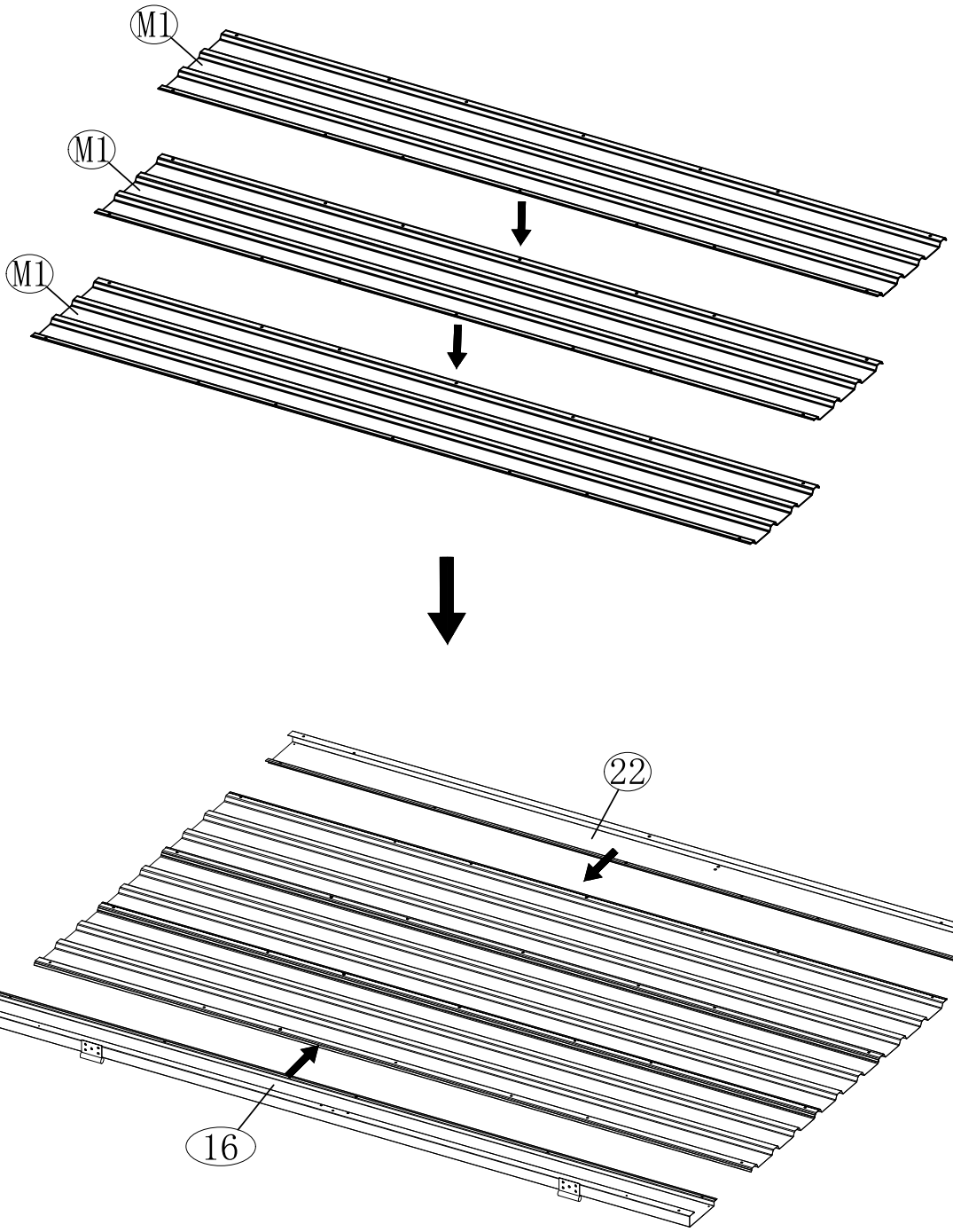

NO.	PART.	Qty.
21		2
27		2

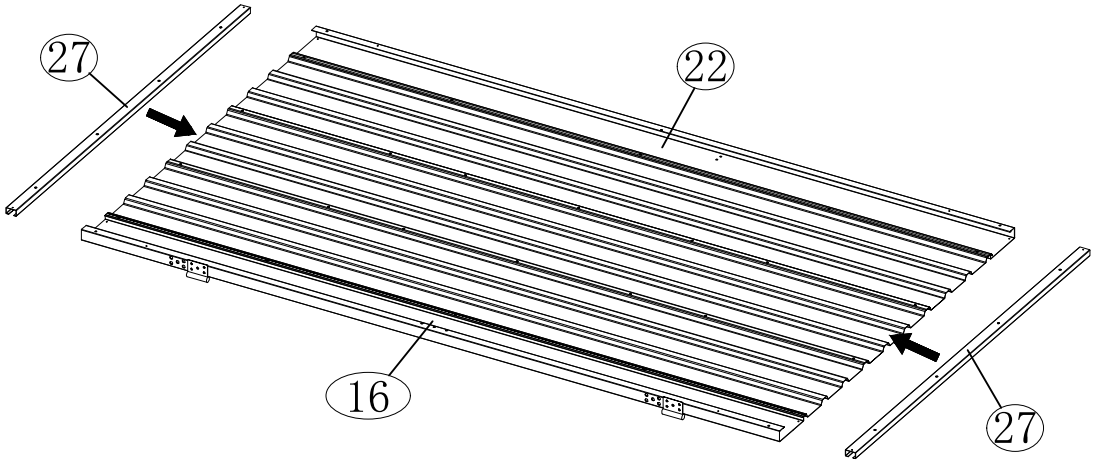

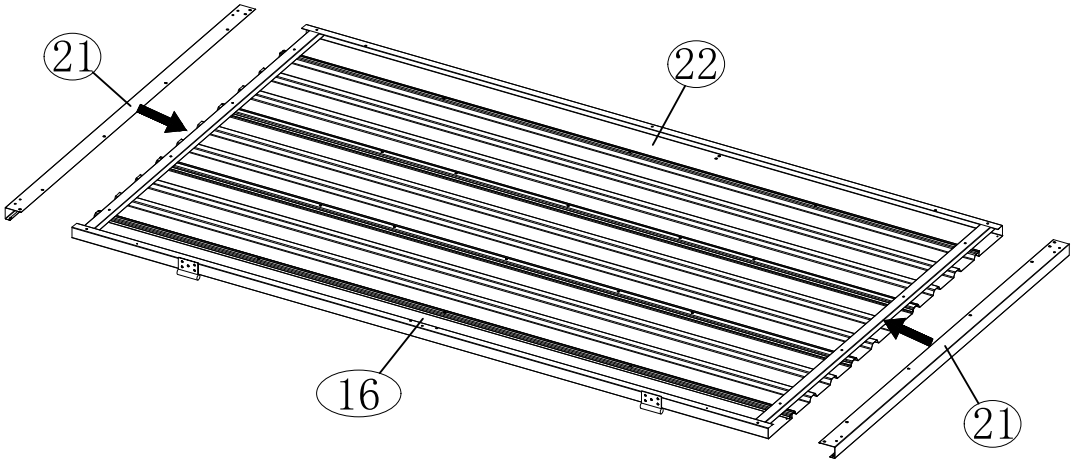

NO.	PART.	Qty.
28		4
Q34	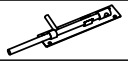	2
Q10		14

Note: The latches should be in the same direction on the same door.

NO.	PART.	Qty.
27		1
Q10		2

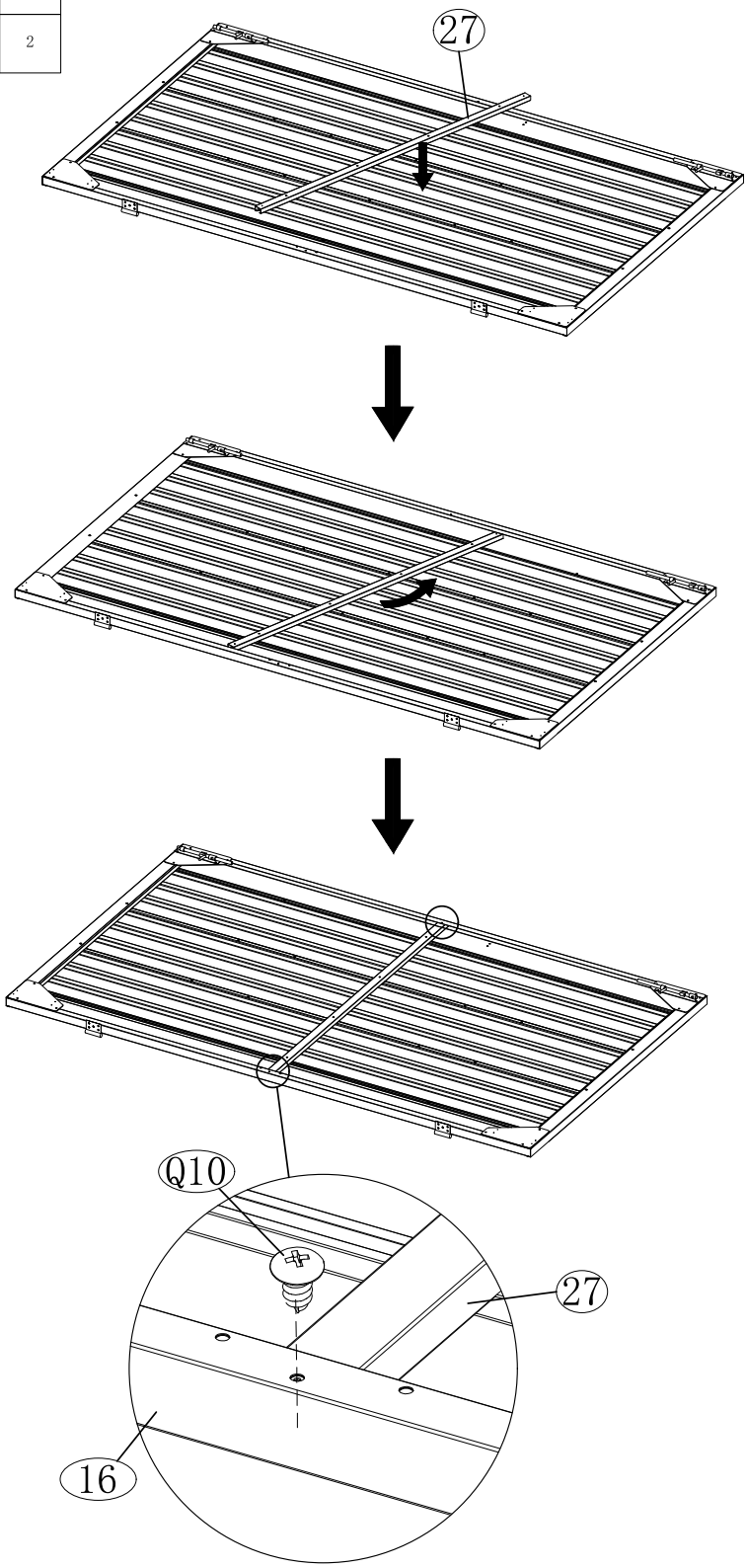

NO.	PART.	Qty.
26		2
Q10		4

NO.	PART.	Qty.
Q39		8
Q41		16
Q42		24

NO.	PART.	Qty.
Q47A		1
Q10		8
Q44		2
Q17		2

NO.	PART.	Qty.
23		1
M1		3

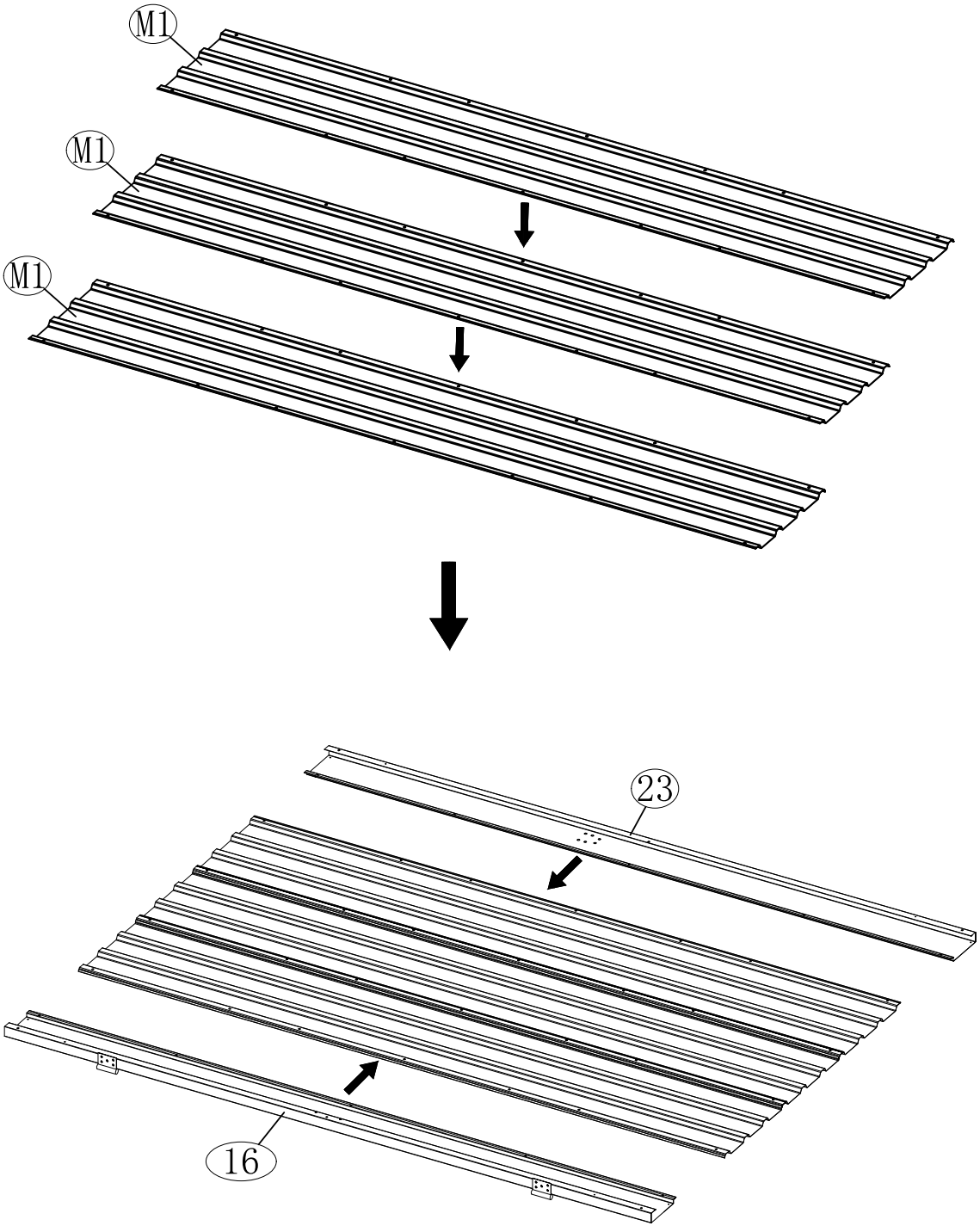

NO.	PART.	Qty.
21		2
27		2

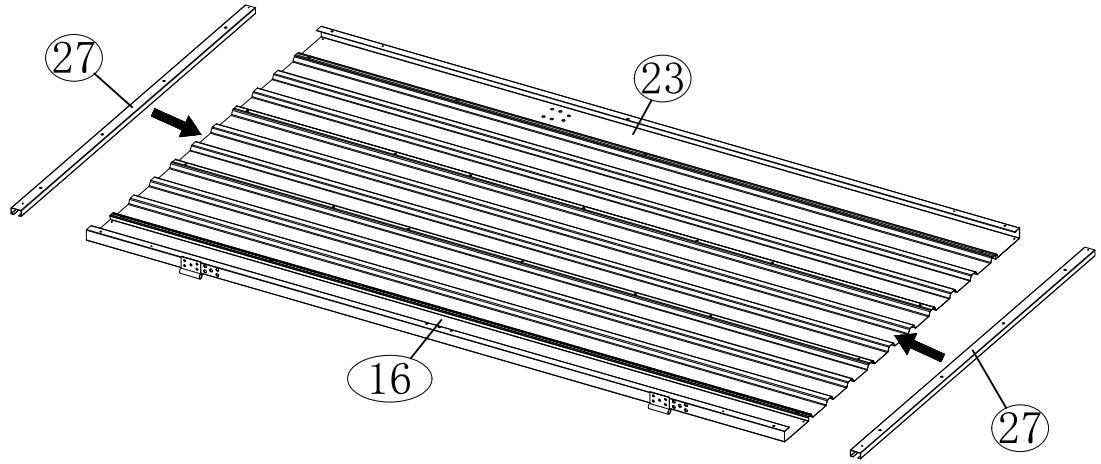

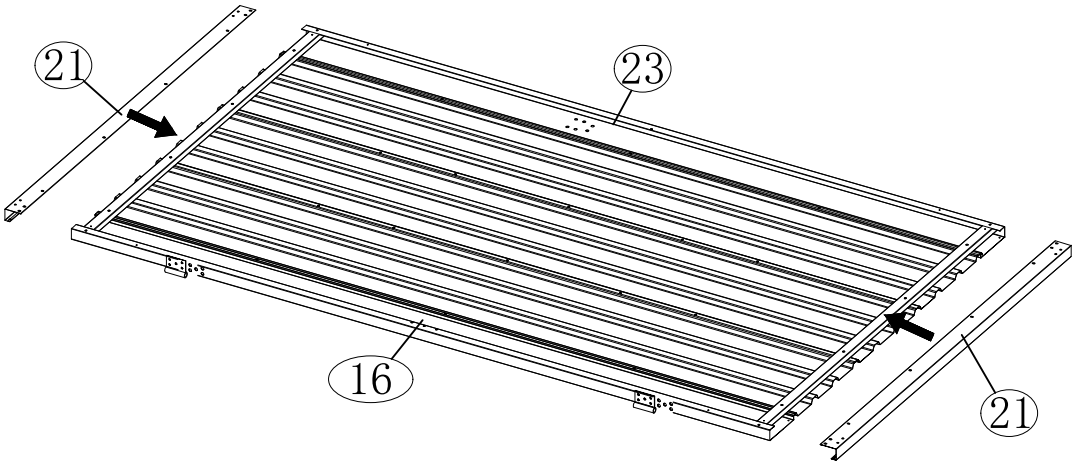

NO.	PART.	Qty.
28		4
Q34	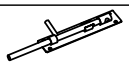	2
Q10		14

Note: The latches should be in the same direction on the same door.

NO.	PART.	Qty.
27		1
Q10		2

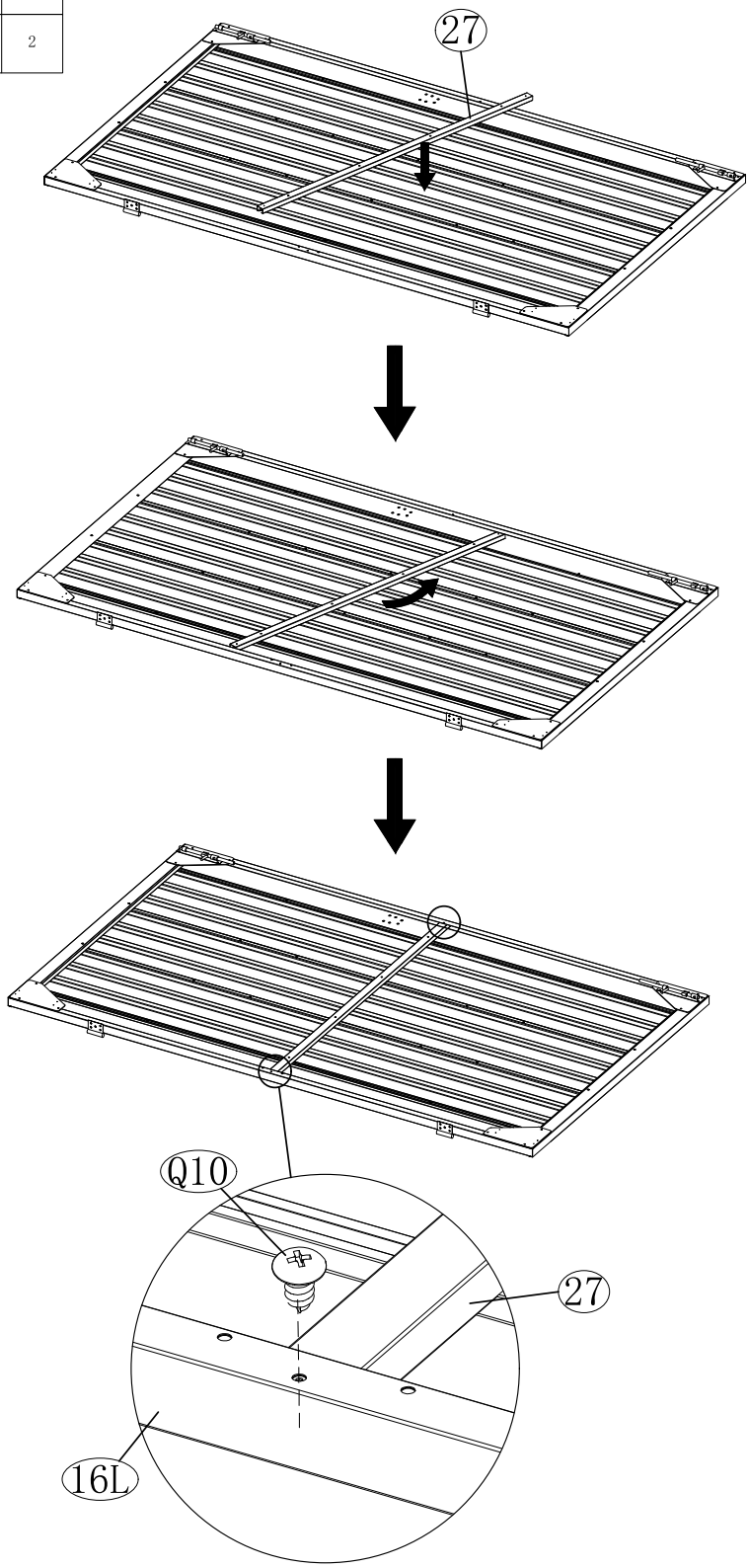

NO.	PART.	Qty.
26		2
Q10		4

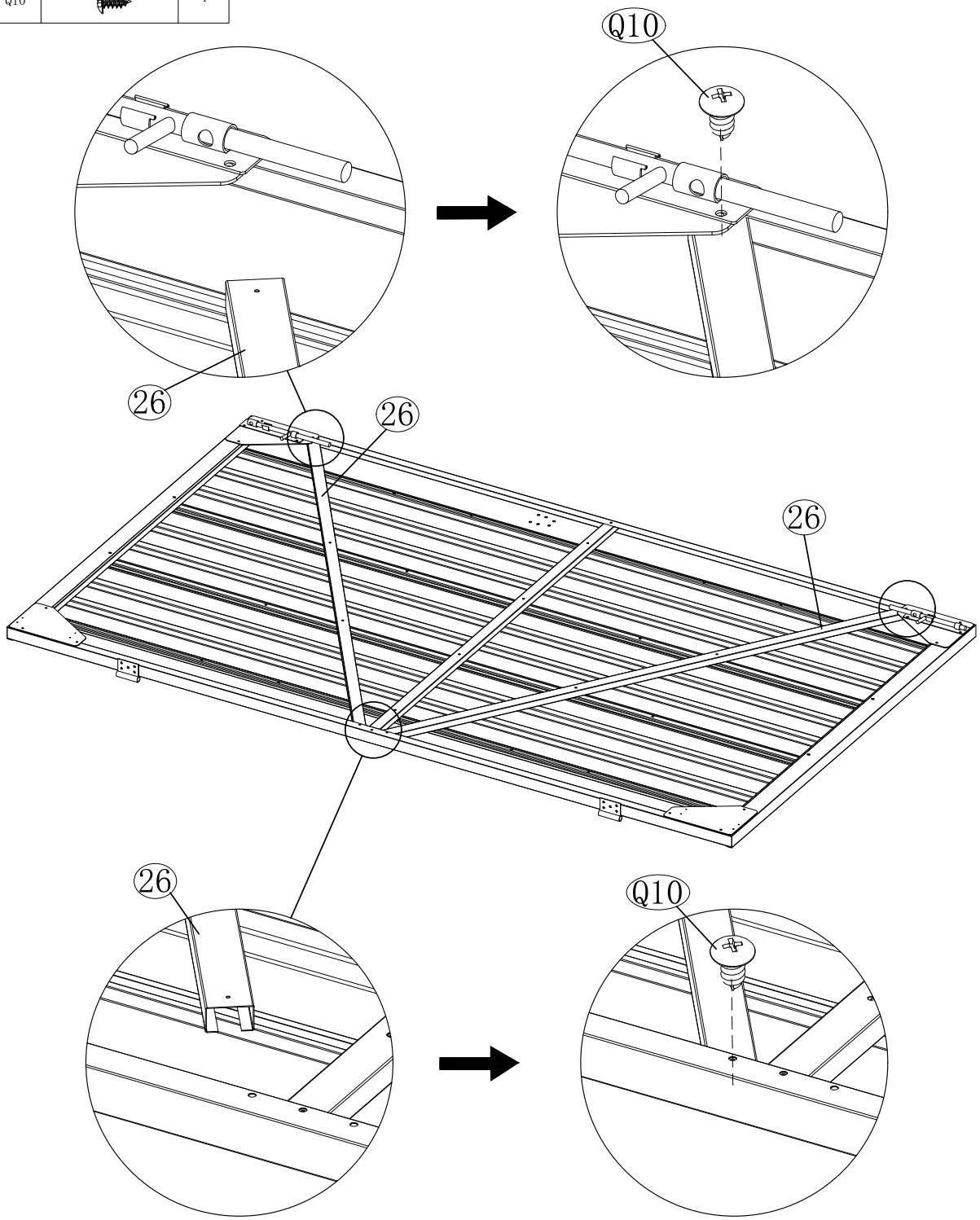

NO.	PART.	Qty.
Q39		8
Q41		16
Q42		24

NO.	PART.	Qty.
Q47B		1
Q10		8
Q44		6
Q17		6

NO.	PART.	Qty.
16X	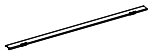	1
21X		2
22X	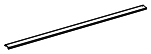	1
M2		1
Q10		4

NO.	PART.	Qty.
15		2
52		1
Q10		2
Q39		3
Q40		2
Q42		5

NO.	PART.	Qty.
Q46		1
Q39		6
Q42		6

NO.	PART.	Qty.
Q39		6
Q42		6

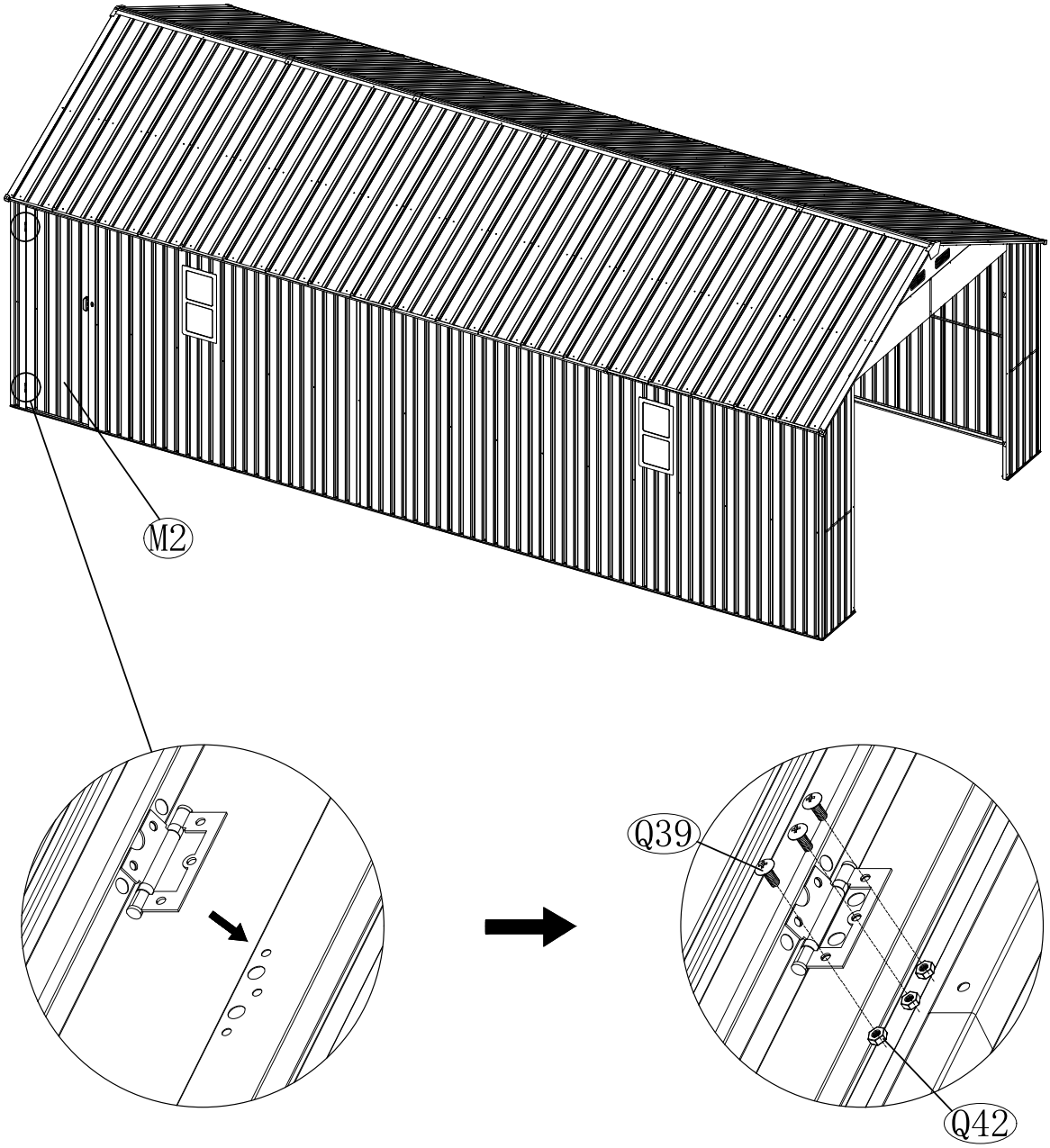

NO.	PART.	Qty.
Q35	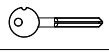	1

Diagram of unlocking the side door from both inside and outside.

NO.	PART.	Qty.
Q33B		4
Q49		20
Q54		20

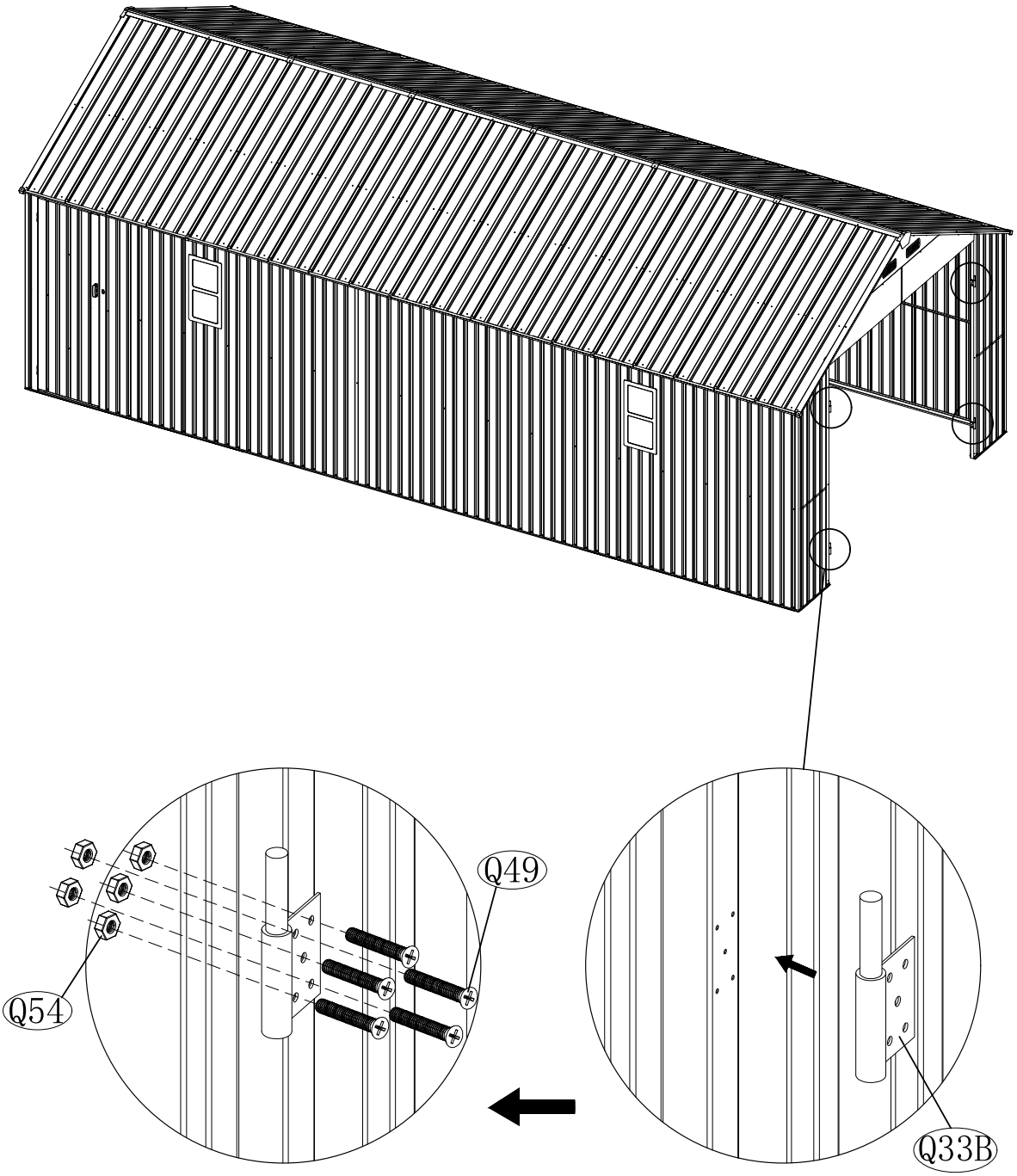

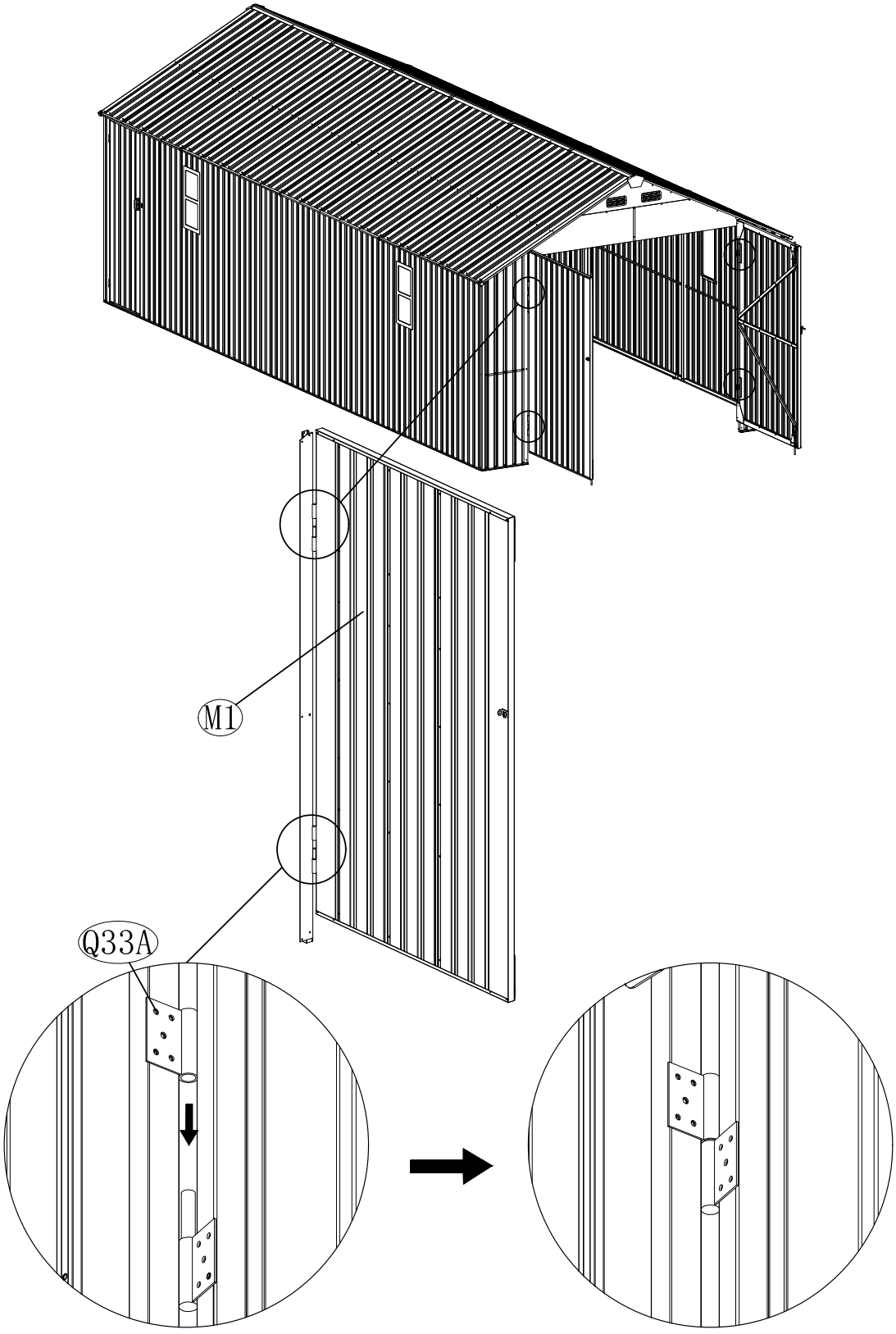
M1
Q33A

NO.	PART.	Qty.
Q21		14

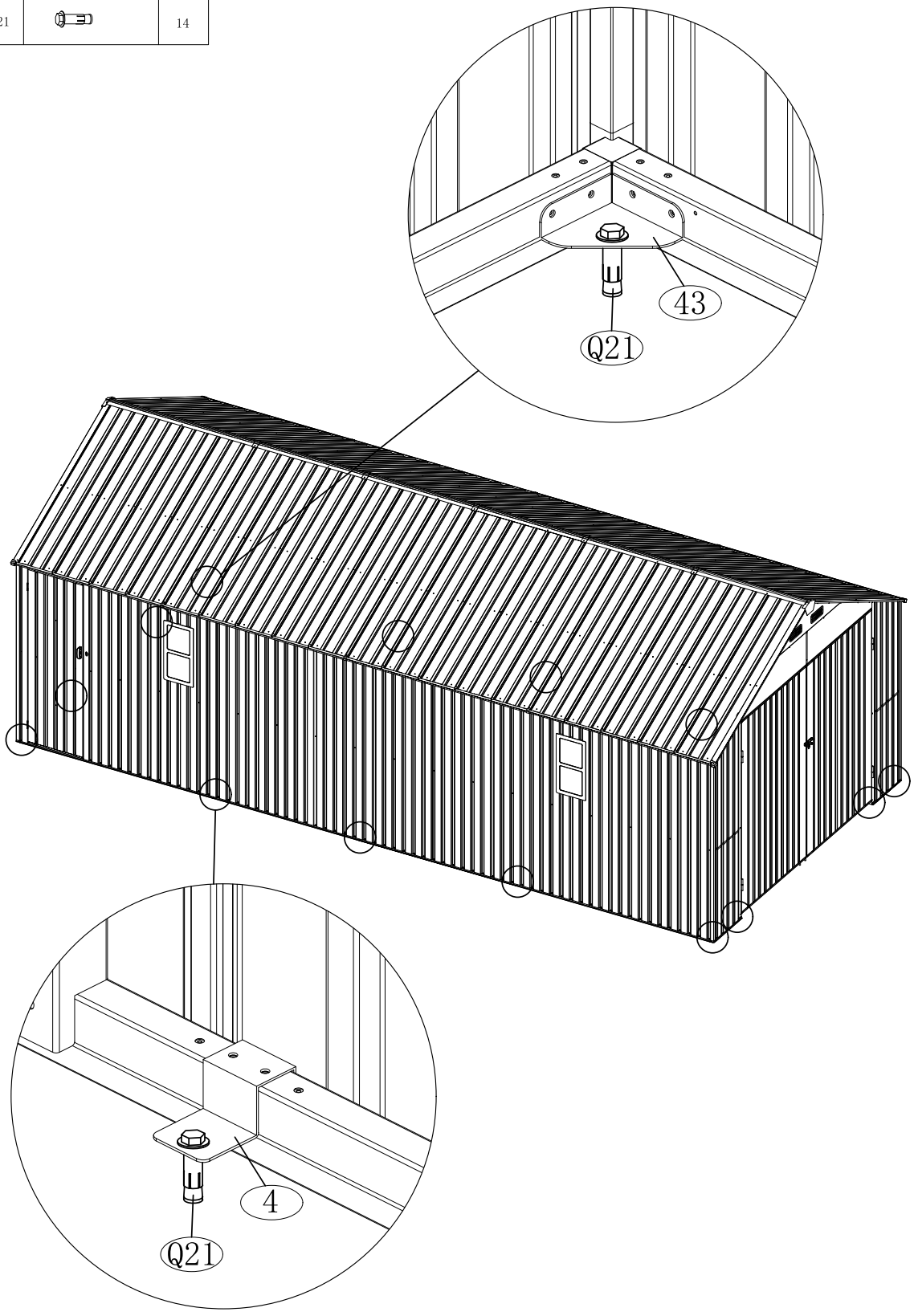

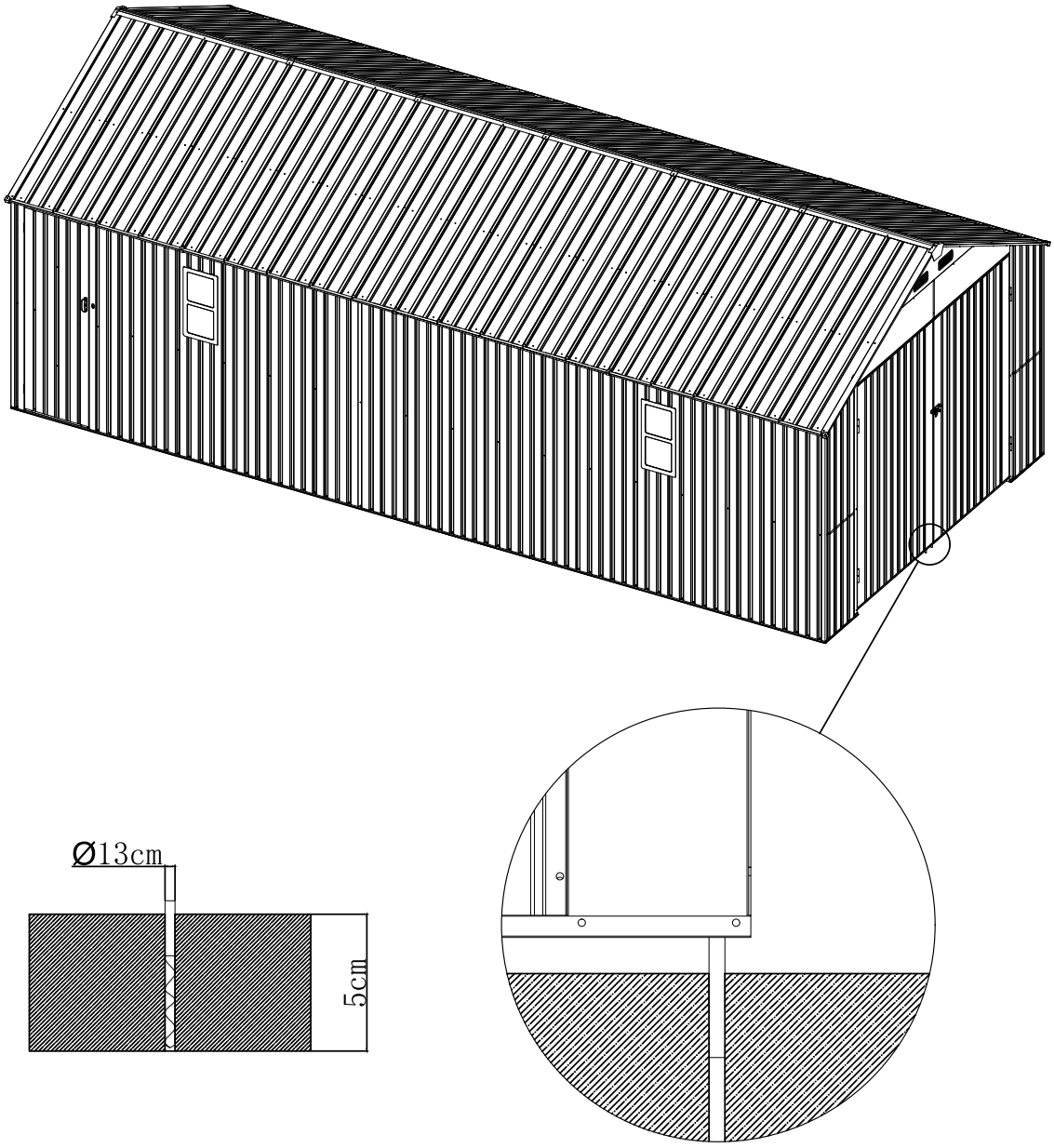

Note: At the positions where the gate opens and closes, holes with a diameter of 13 cm should be drilled on the ground to restrict the gate. This is to prevent unnecessary losses caused by strong winds.

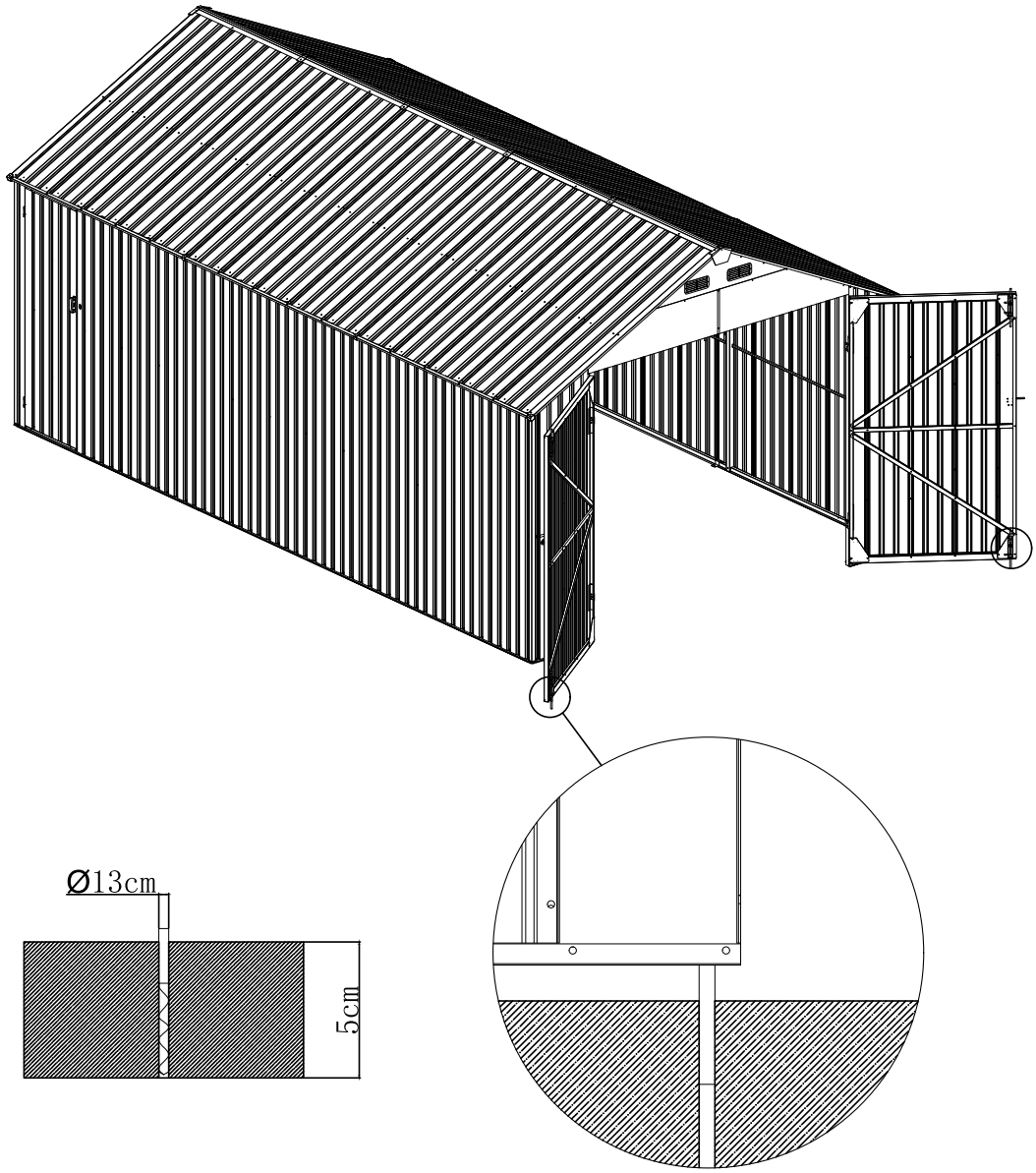

Note: At the positions where the gate opens and closes, holes with a diameter of 13 cm should be drilled on the ground to restrict the gate. This is to prevent unnecessary losses caused by strong winds.