Installation & Assembly

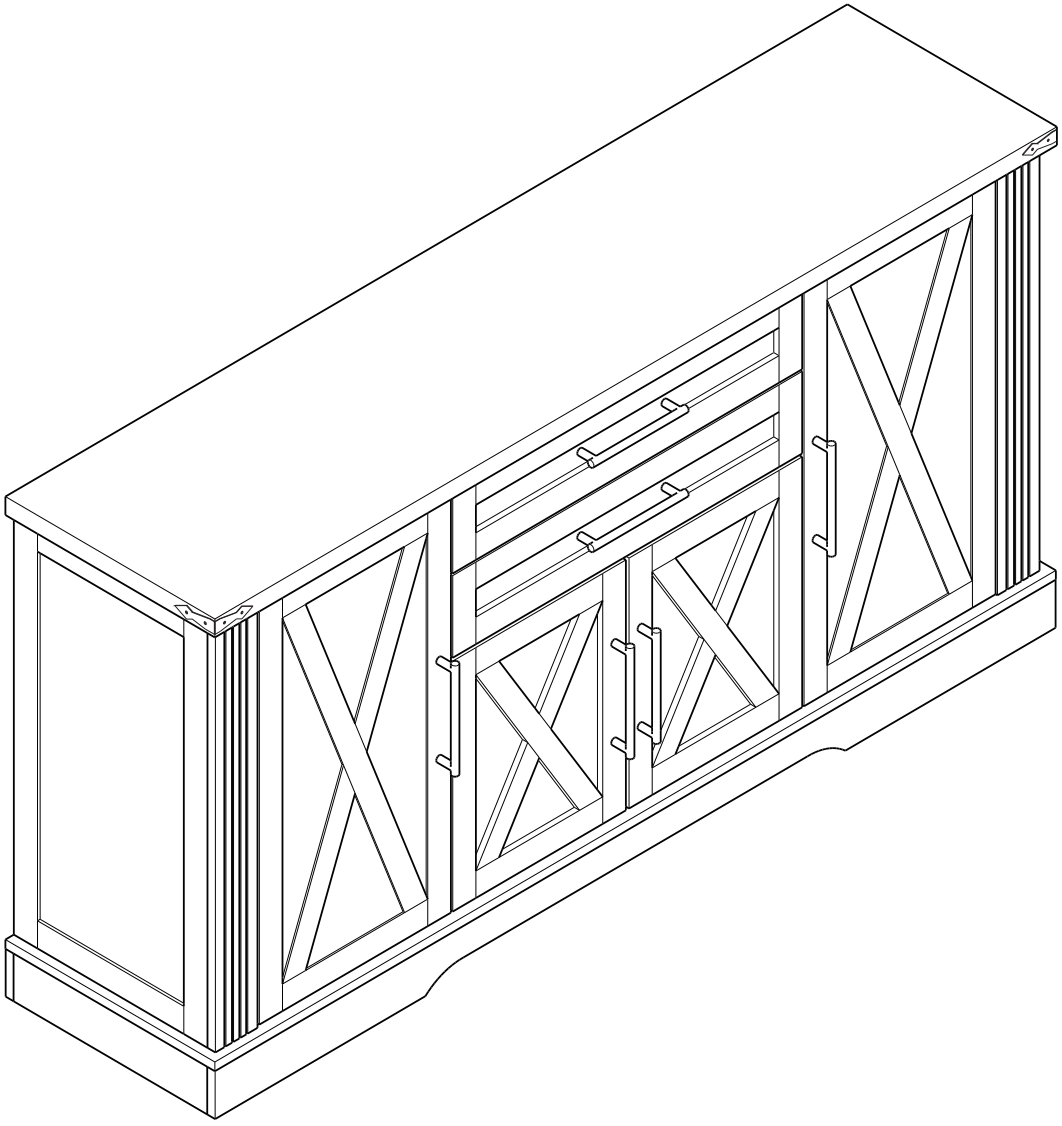

As this item contains many parts, please read the installation instruction carefully before installation . Please use tools properly and carefully.

Before You Start

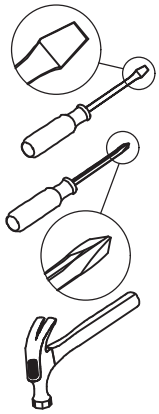

- Read through each step carefully and follow the proper order
- Separate and count all your parts and hardware
- Give yourself enough room for the assembly process
- Have the following tools: Flat Head Screwdriver, #2 Phillips Head Screwdriver and Hammer
- Caution: If using a power drill or power screwdriver for screwing, please be aware of to slow down and stop when screw is tight. Failure to do so may result in stripping the screw. （Assembly speed can be increased by using electric screwdriver）

Helpful Hints

PEOPLE NEEDED FOR ASSEMBLY: **1-2**

- Open your item in the area you plan to keep it to avoid excessive heavy lifting.



- Identify, sort and count the parts before attempting assembly.

- Make sure to always face the point on the top of the Cam Lock towards the outer edge.



- If there is a back panel in the package, please install it to make sure your unit is complete and sturdy.



-Please fix all the screws provided for the back panel which can enhance product stability. If it is difficult to fix it when tightening, it can be fixed with the help of a hammer and then tightened.



- Never push, pull, or drag your furniture.

Board Identification

Not actual size

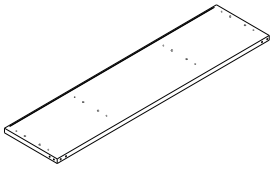

①

Qty:1

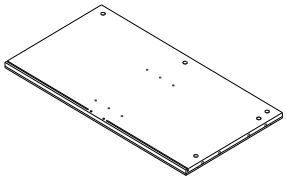

②

Qty:1

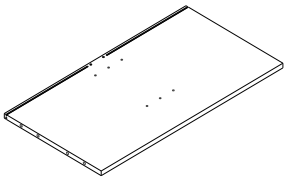

③

Qty:1

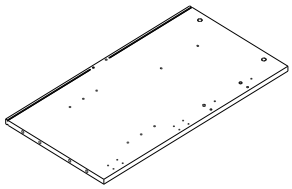

④

Qty:1

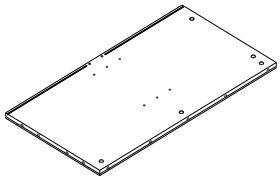

⑤

Qty:1

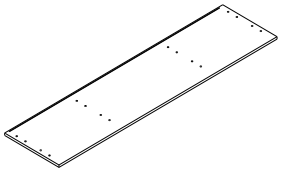

⑥

Qty:1

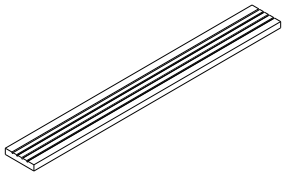

⑦

Qty:2

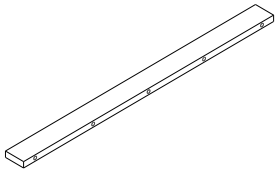

⑧

Qty:1

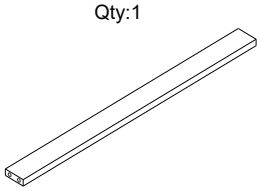

⑨

Qty:2

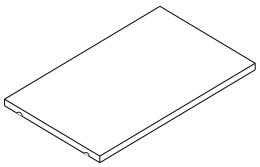

⑩

Qty:2

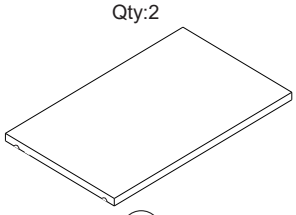

⑪

Qty:1

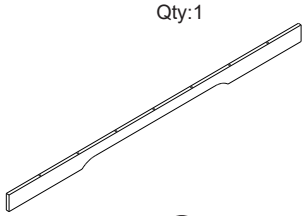

⑫

Qty:1

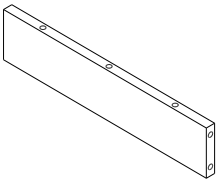

⑬

Qty:2

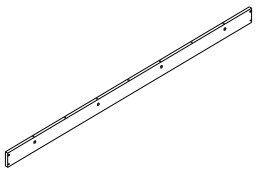

⑭

Qty:1

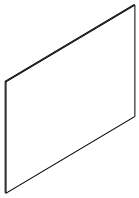

⑮

Qty:2

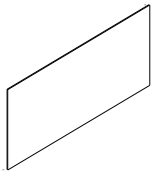

⑯

Qty:2

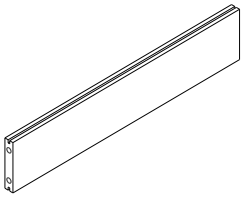

⑰

Qty:2

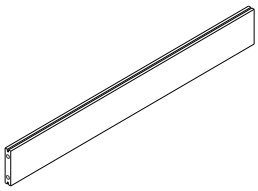

⑱

Qty:1



⑲

Qty:2



⑳

Qty:2

Board Identification

Not actual size

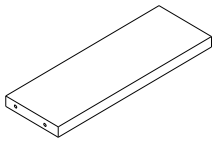

21

Qty:6

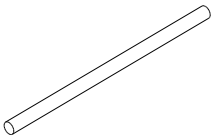

22

Qty:6

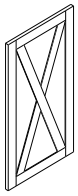

23

Qty:2

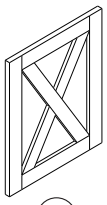

24

Qty:2

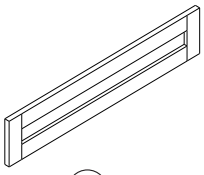

25

Qty:2

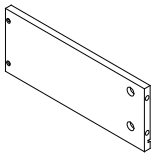

26

Qty:2

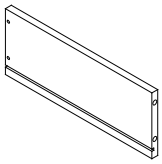

27

Qty:2

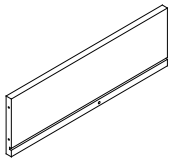

28

Qty:2

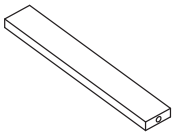

29

Qty:2

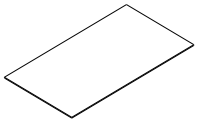

30

Qty:2

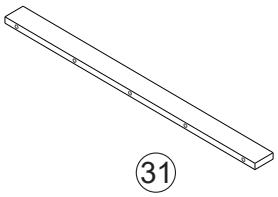

31

Qty:1

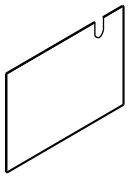

32

Qty:2

Board Identification

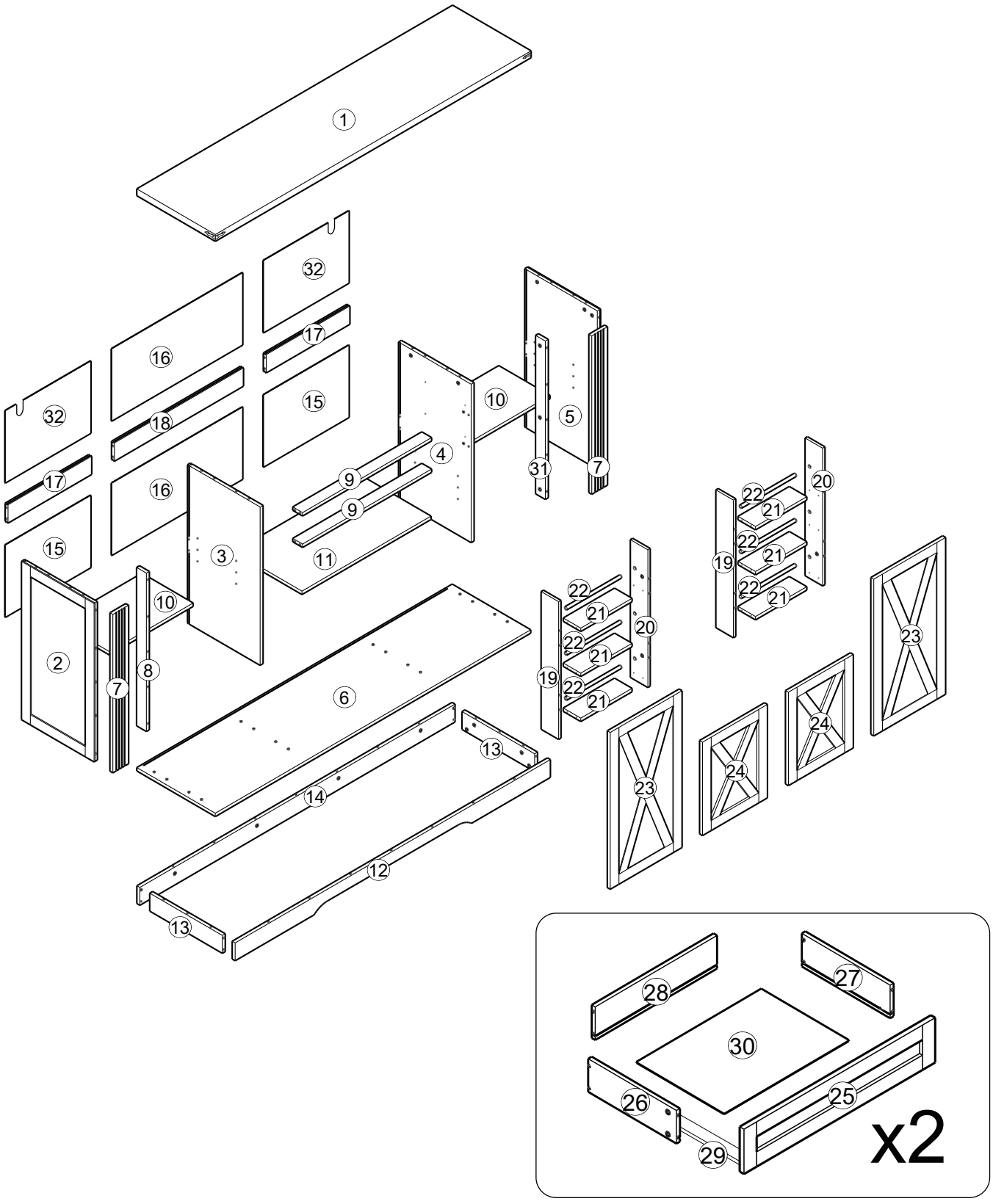

Part List



A	x74



B	x84

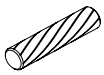

Ø6x30mm

C	x60



Ø3x10mm

D	x24

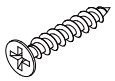

Ø4x35mm

E	x20



Ø3.5x12mm

F	x48

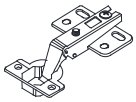

G	x4



Ø4x22mm

H	x8

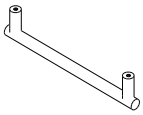

I	x6

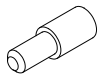

J	x12



Ø3x16mm

K	x24



L	x2

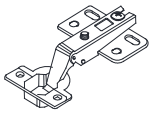

M	x4



Ø4x16mm

N	x4

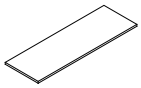

O	x4

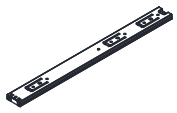

P	x4



Q	x10

Cam Lock Fastening System

Insert the cam bolt into the hole first, then insert the cam lock and lock it.

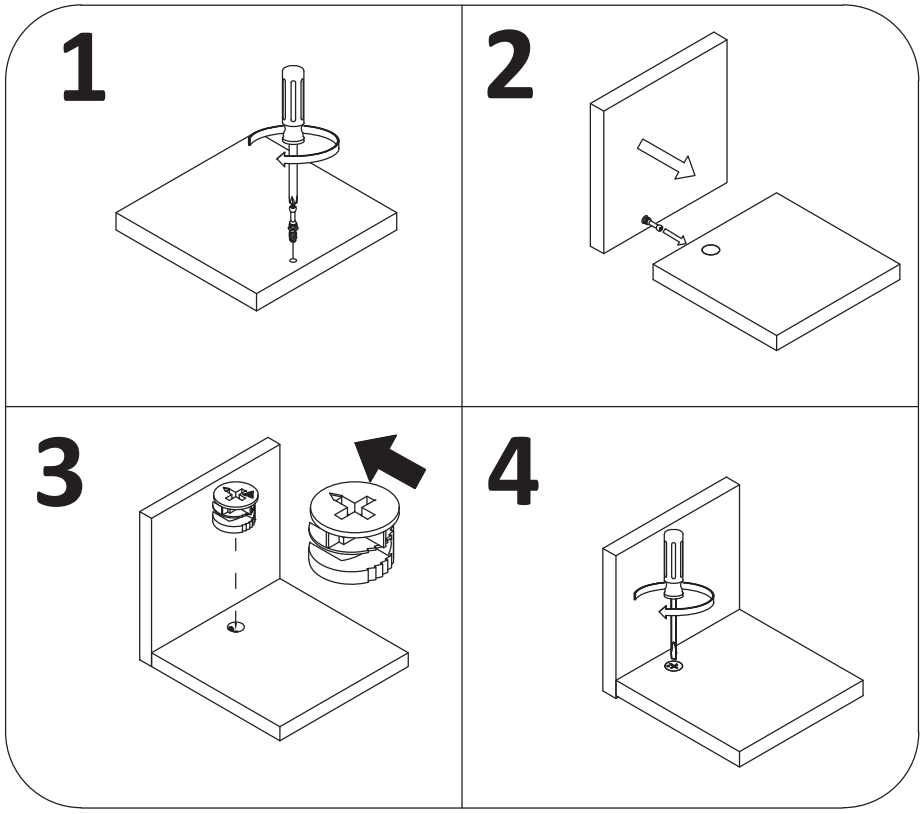

STEP 1

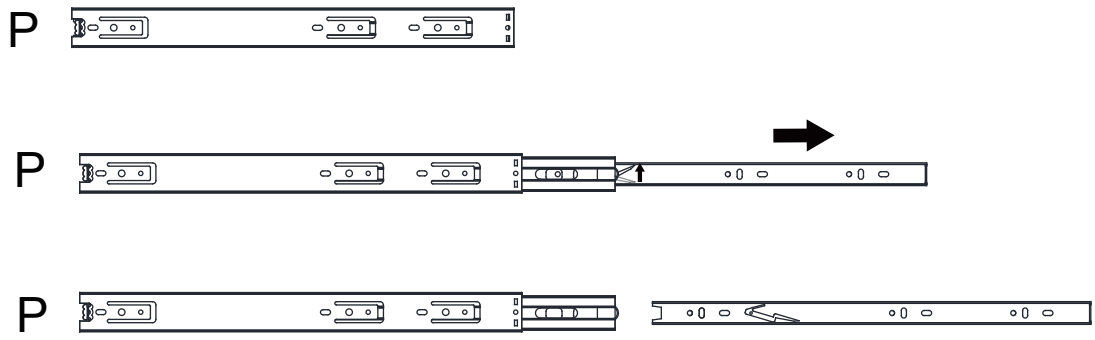

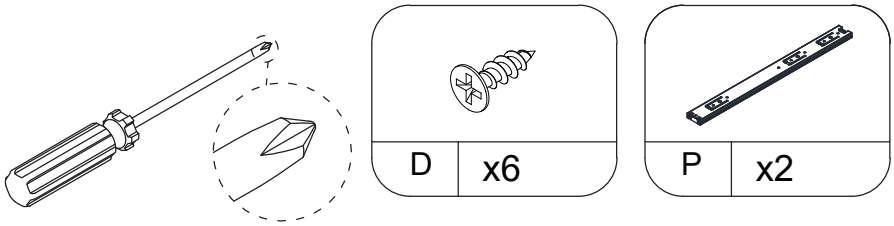

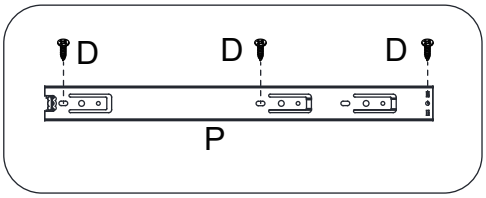

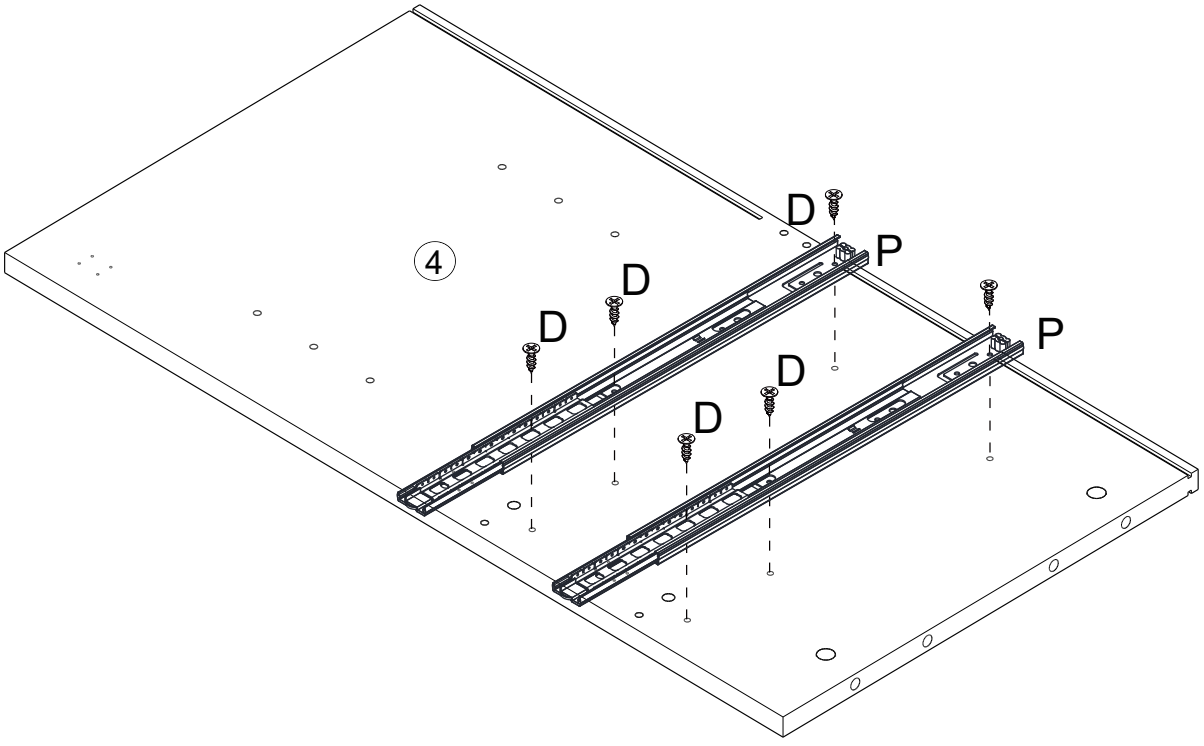

STEP 2

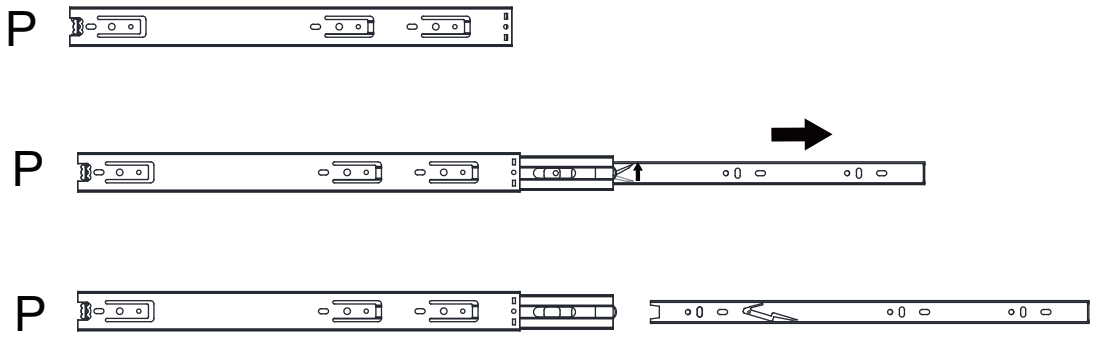

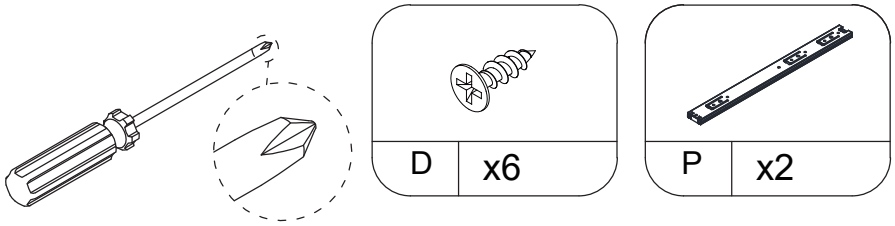

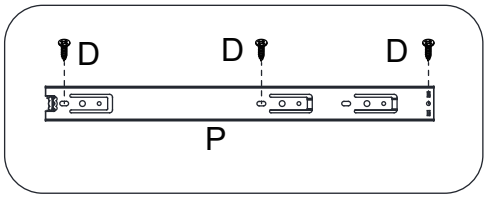

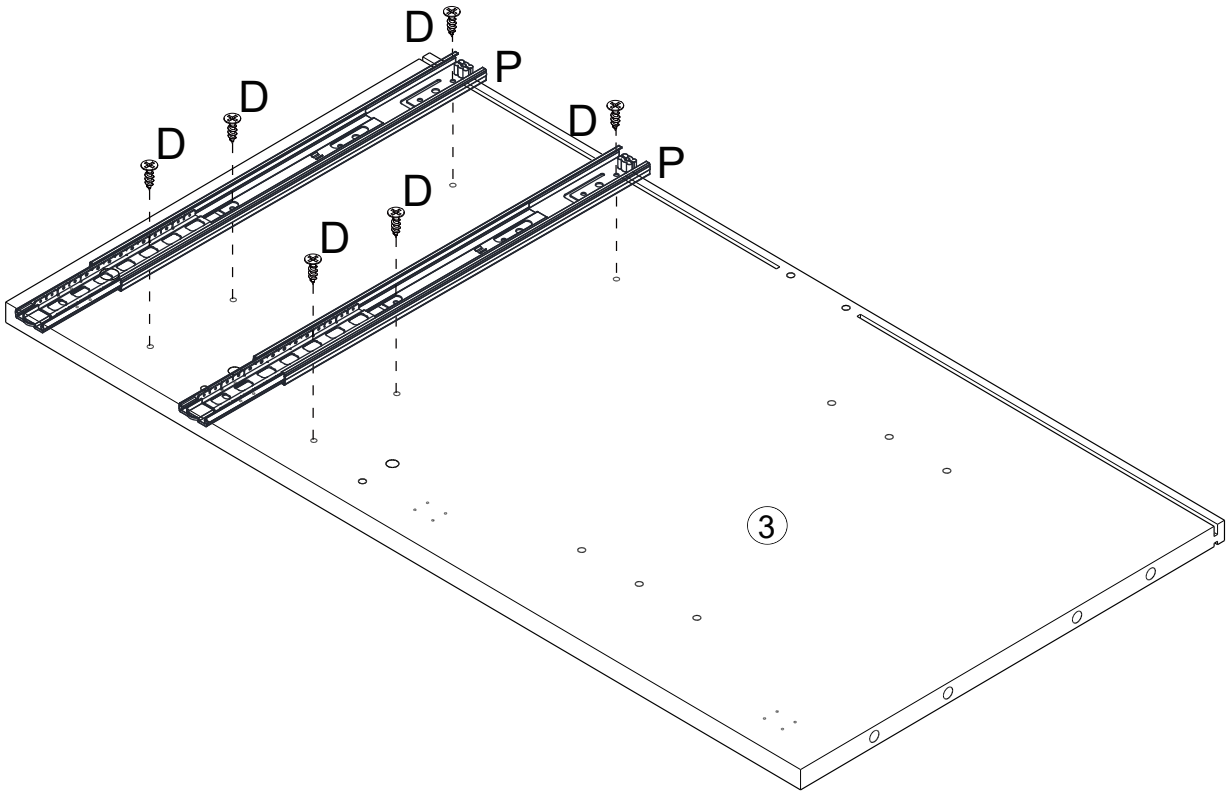

STEP 3

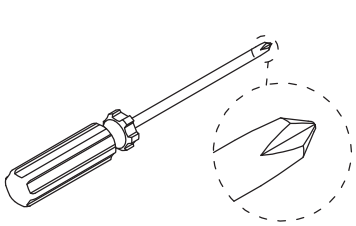

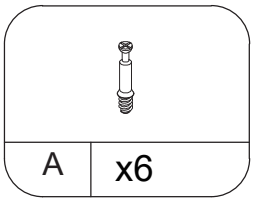

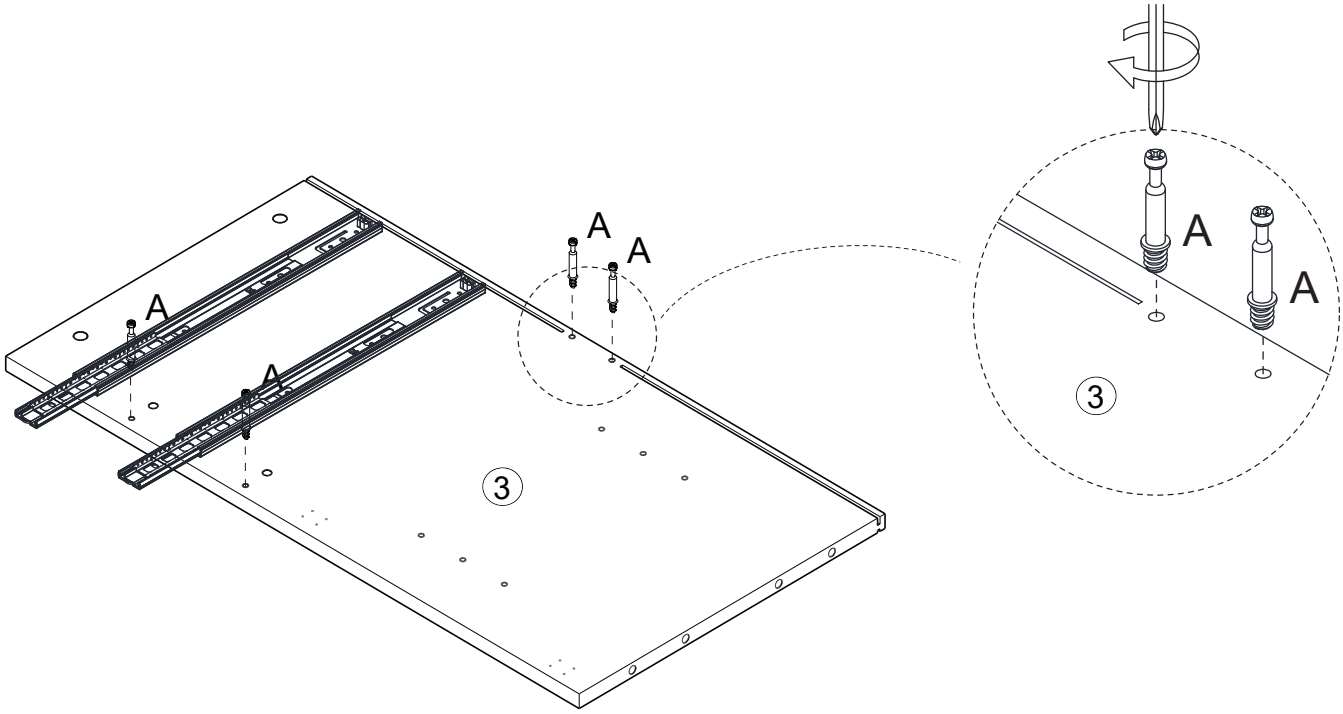



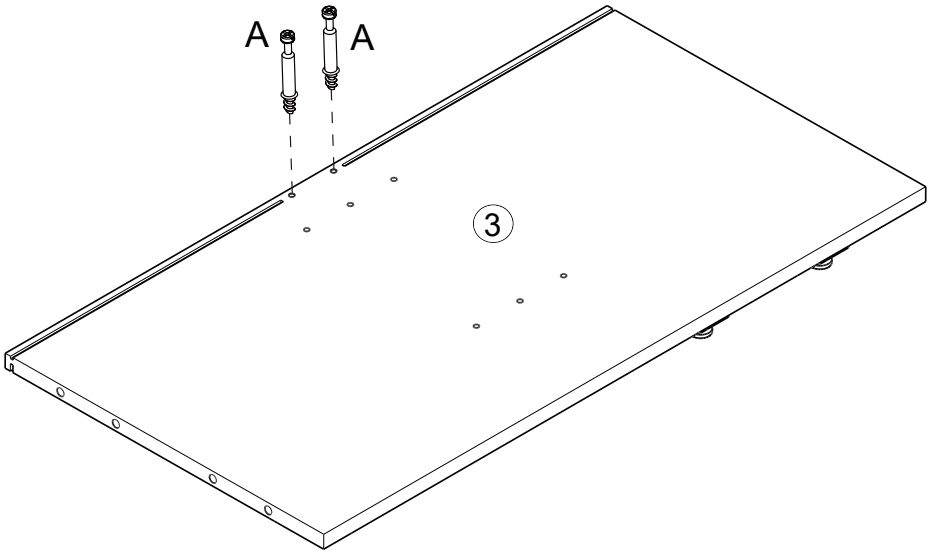

STEP 4

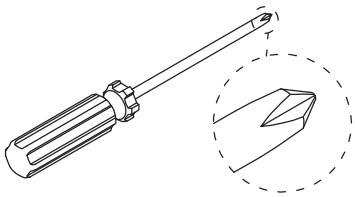

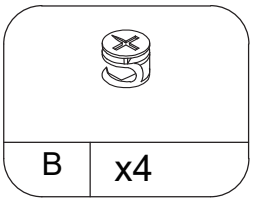

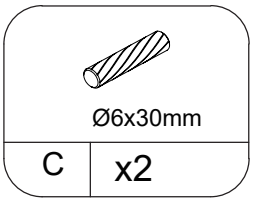

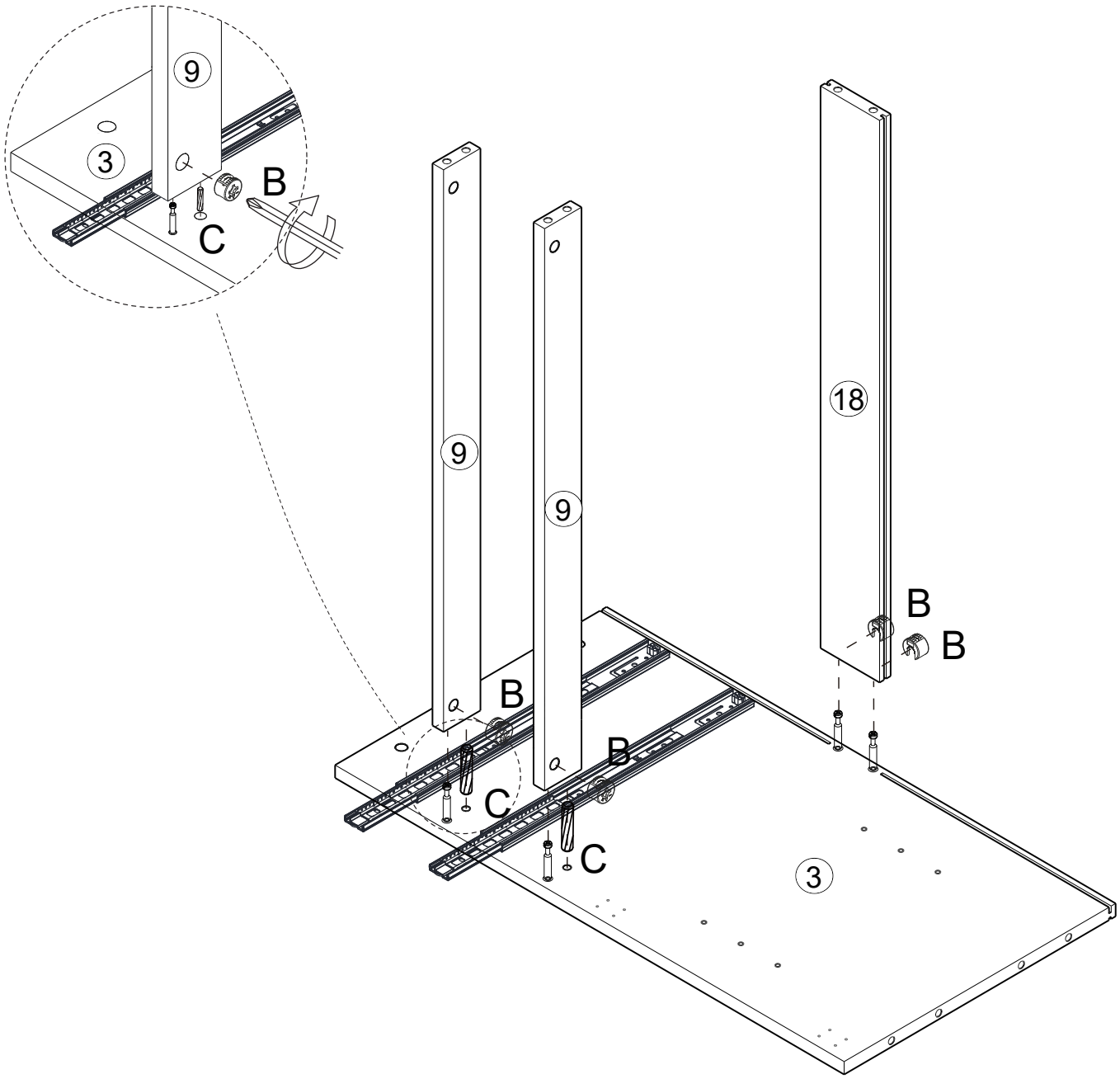

STEP 5

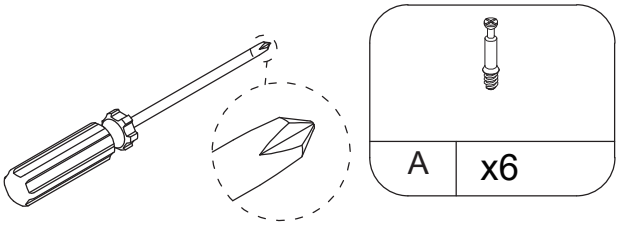

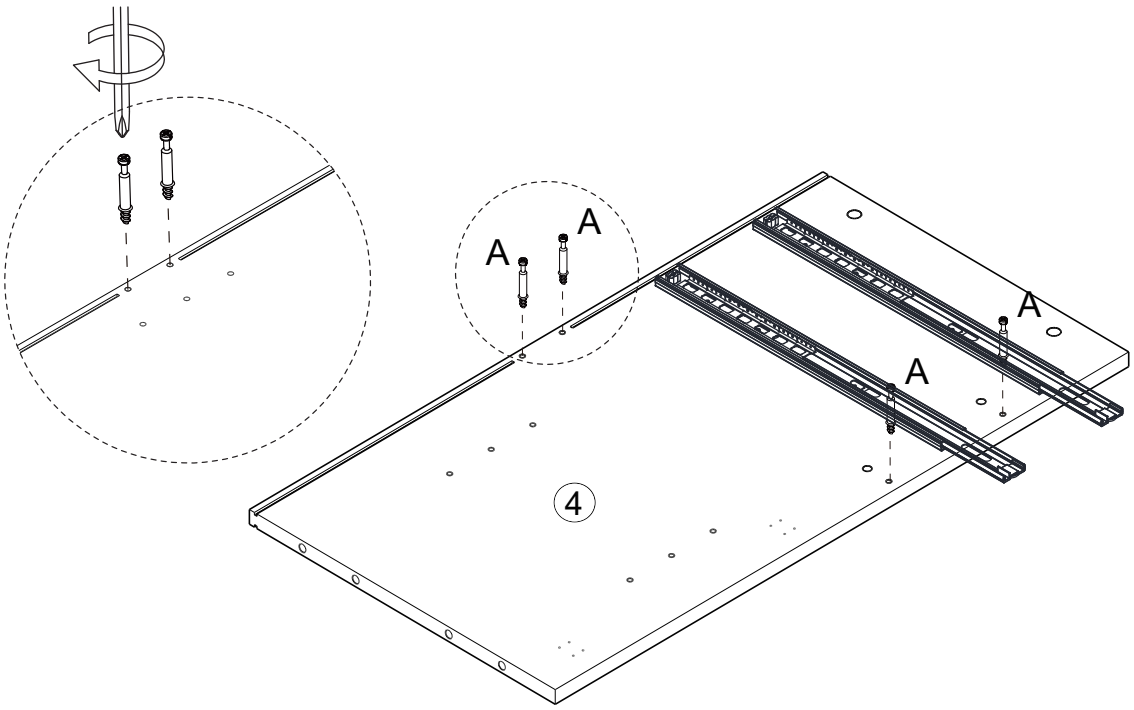



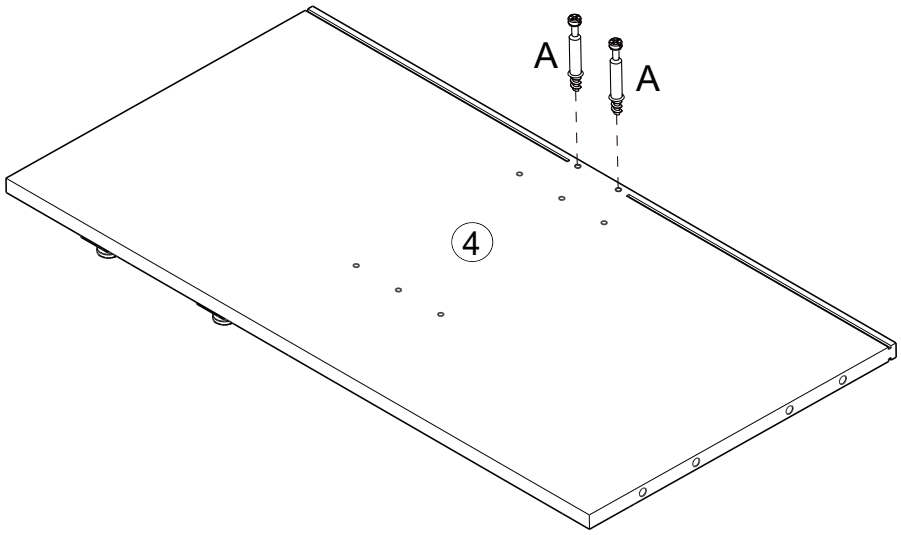

STEP 6

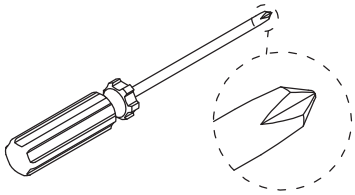

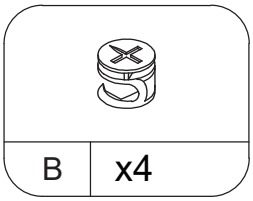

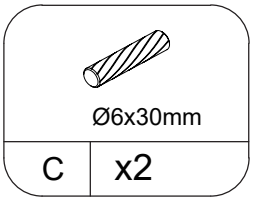

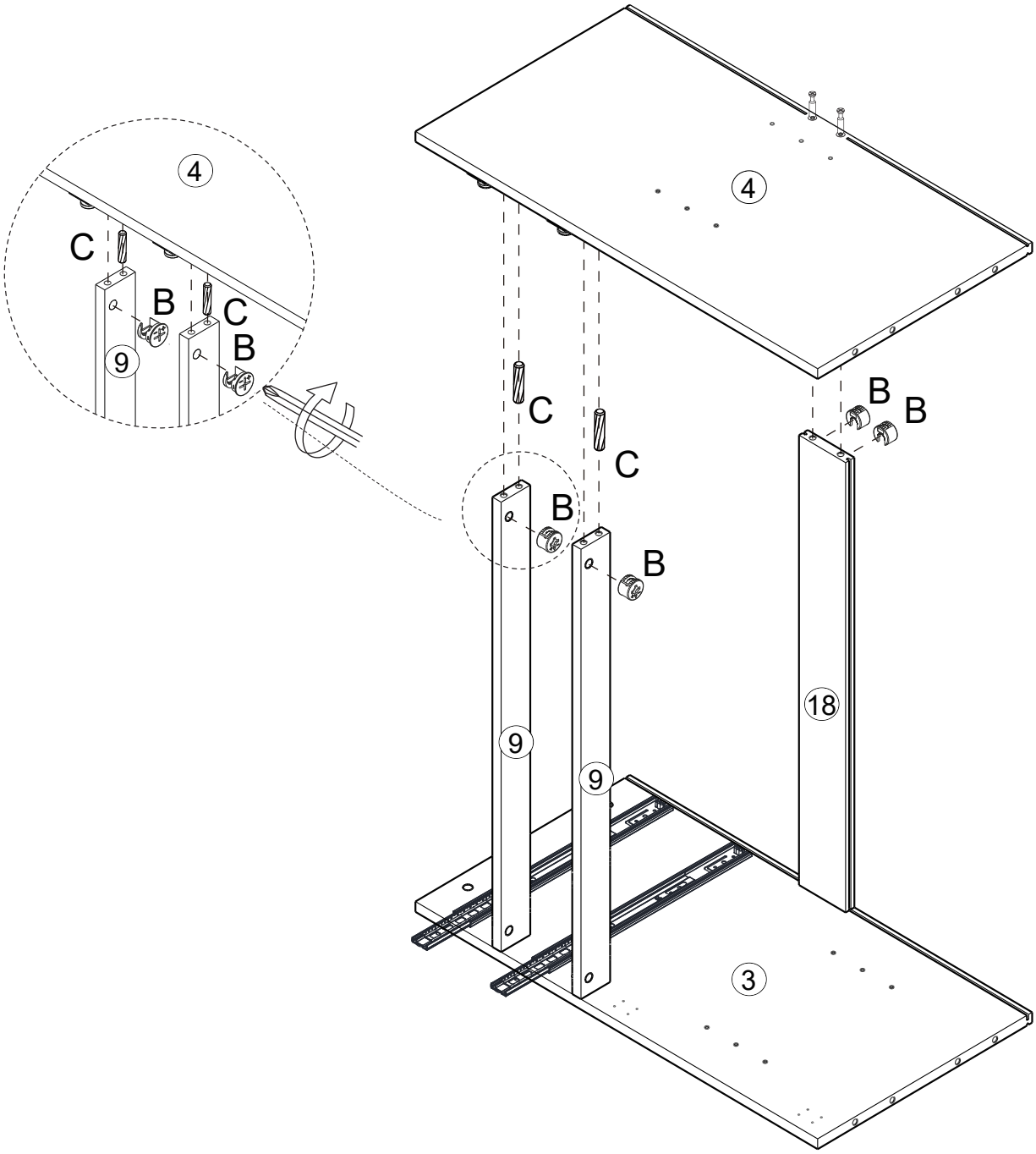

STEP 7

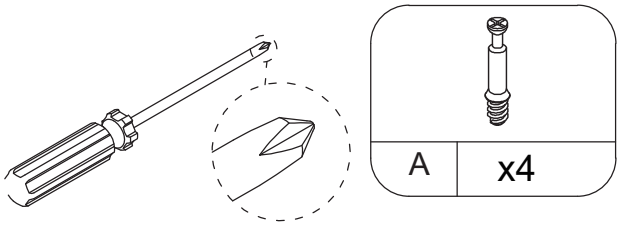

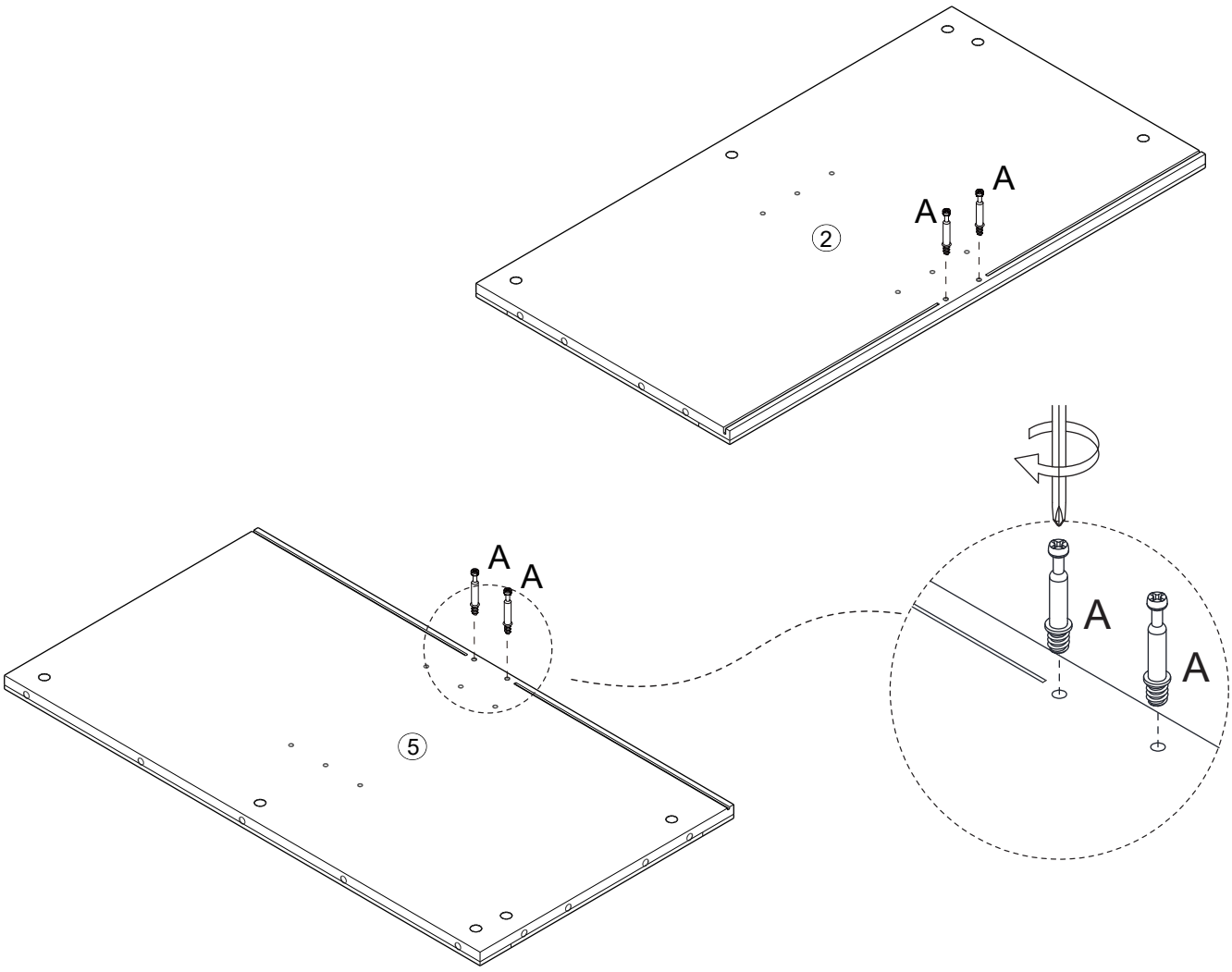

STEP 8

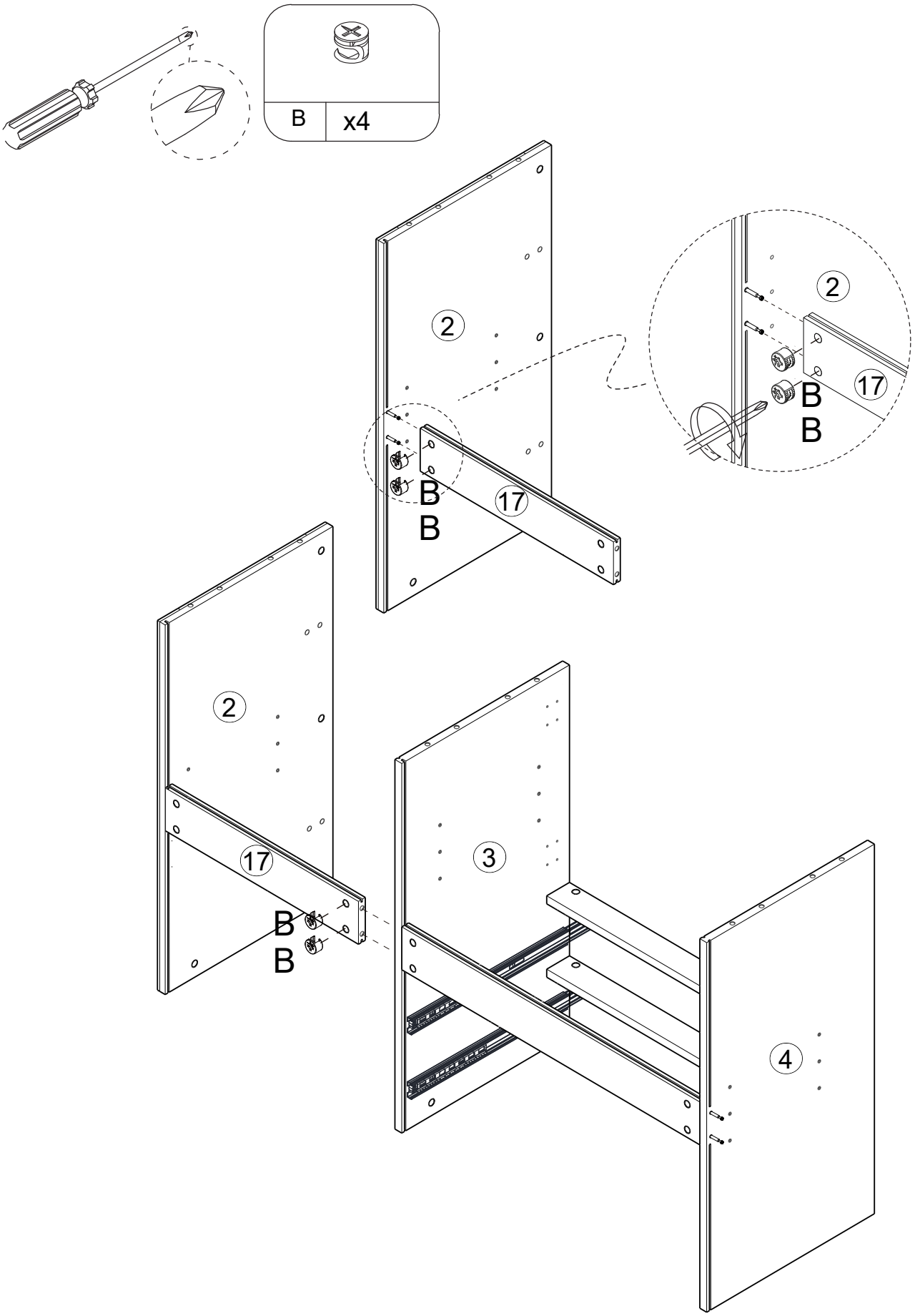

STEP 9

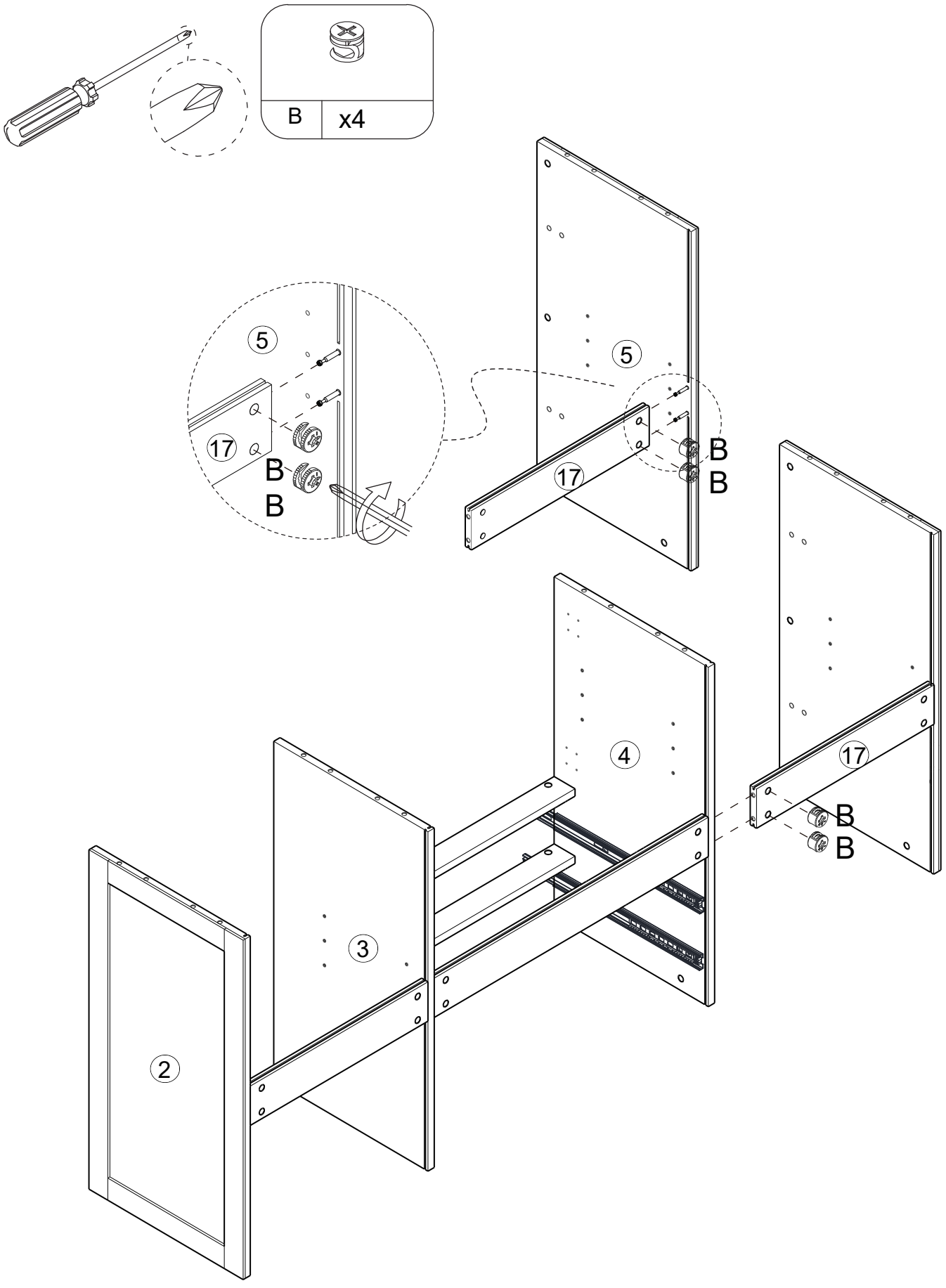

STEP 10

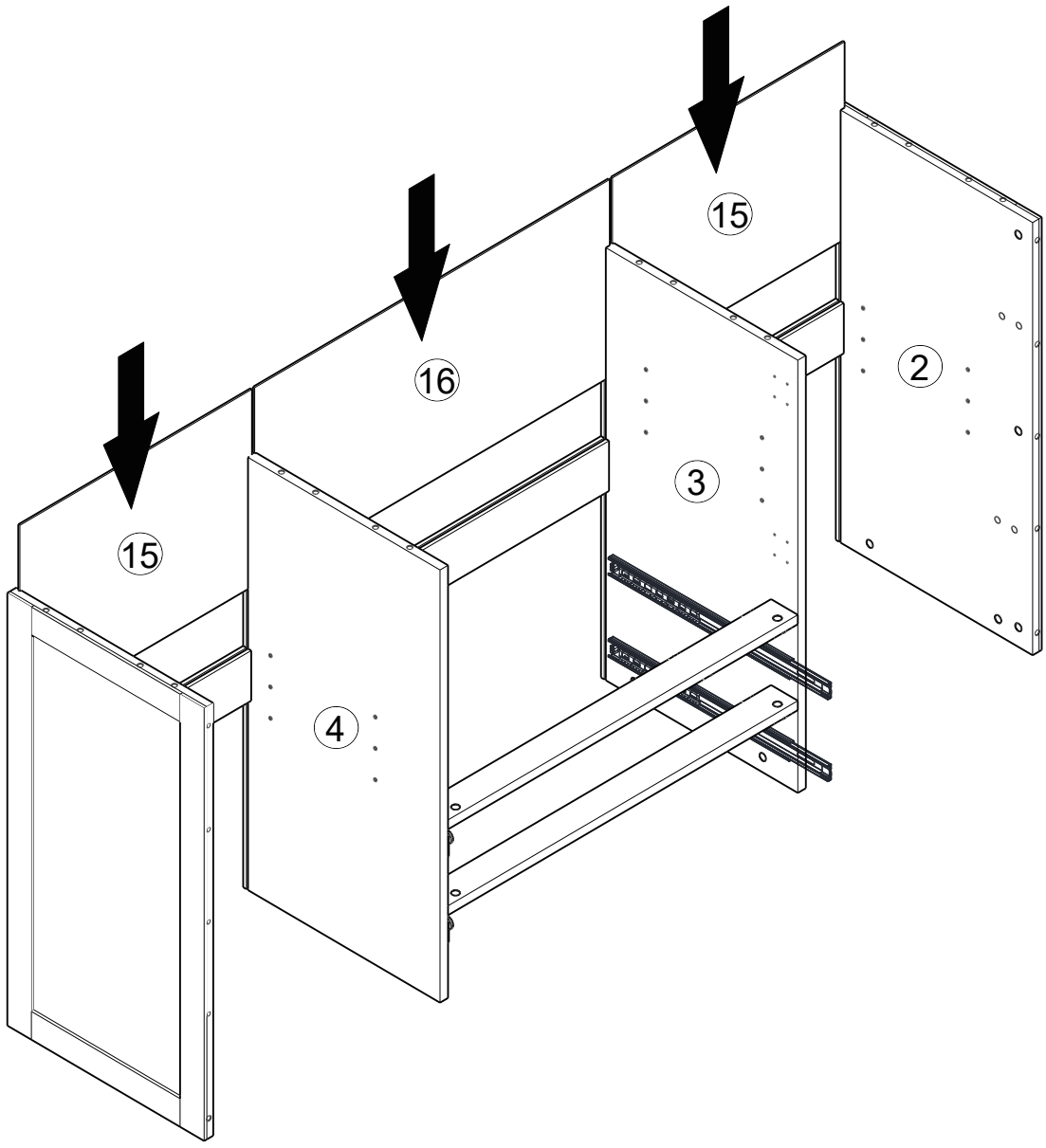

STEP 11

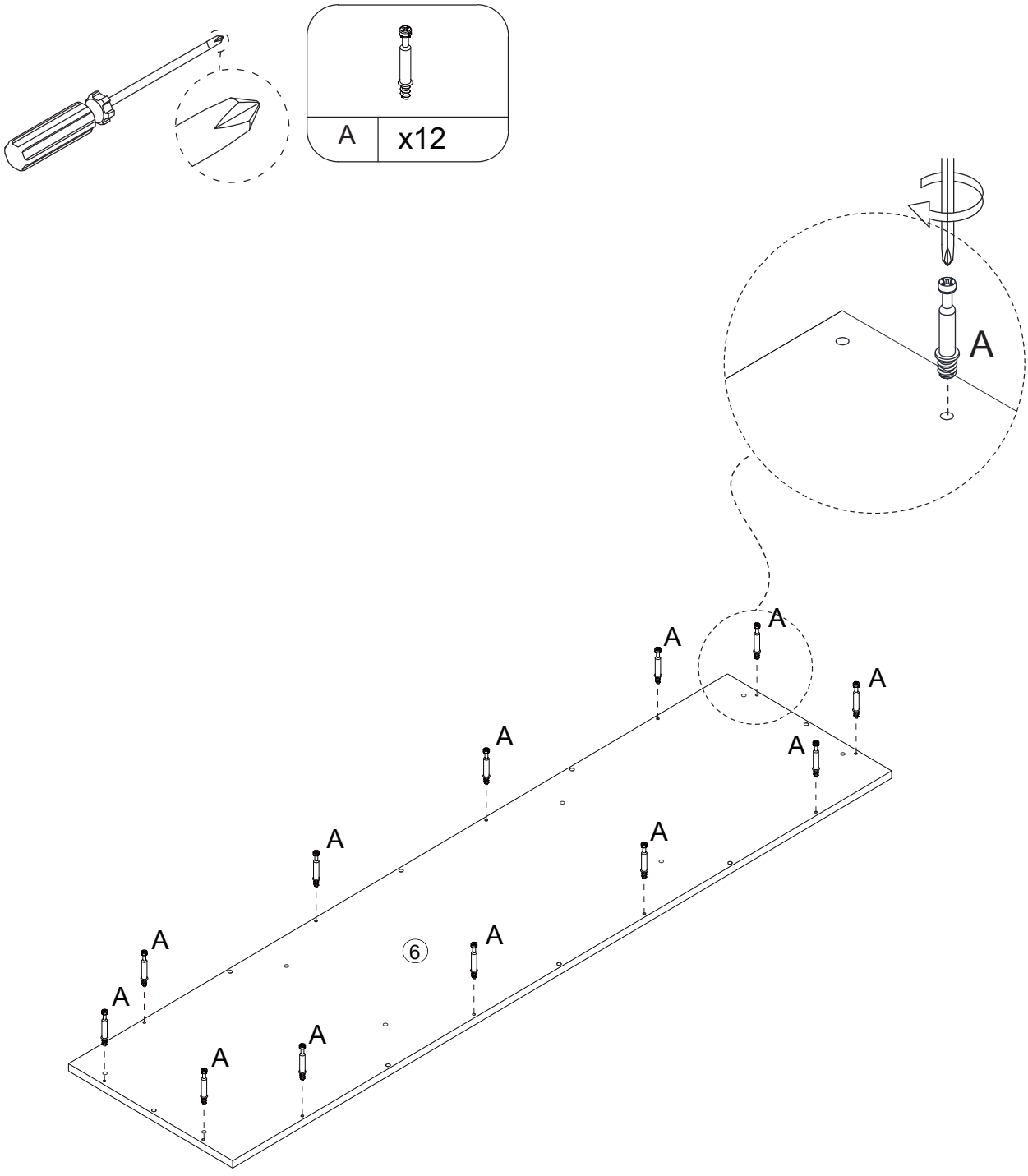

STEP 12

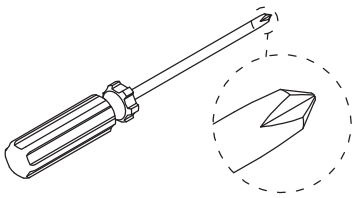

Ø4x35mm	
E	x8

Ø6x30mm	
C	x8

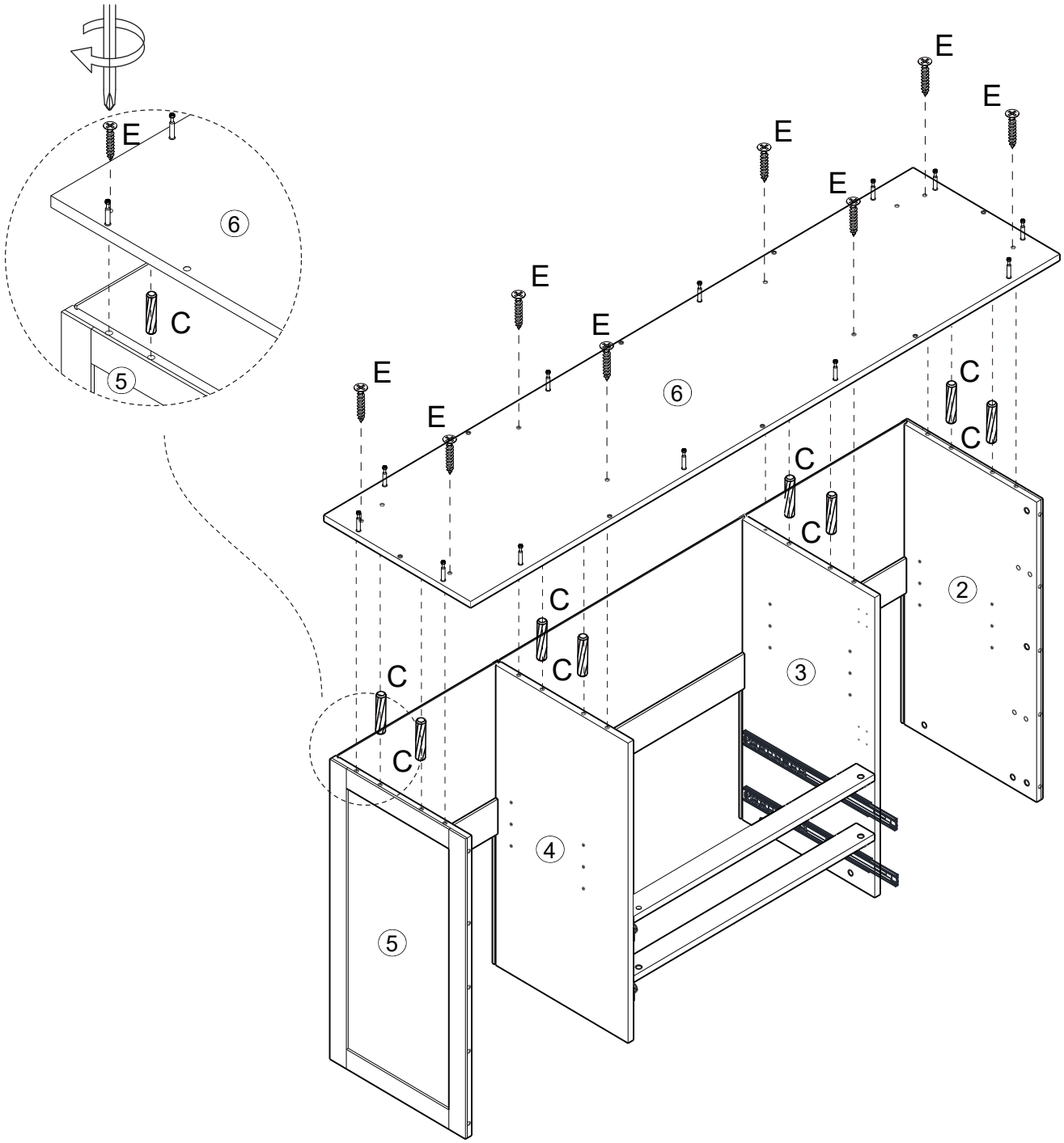

STEP 13

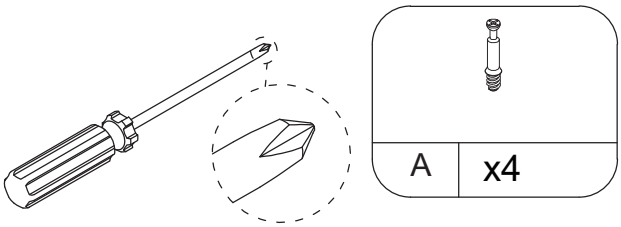

A	x4

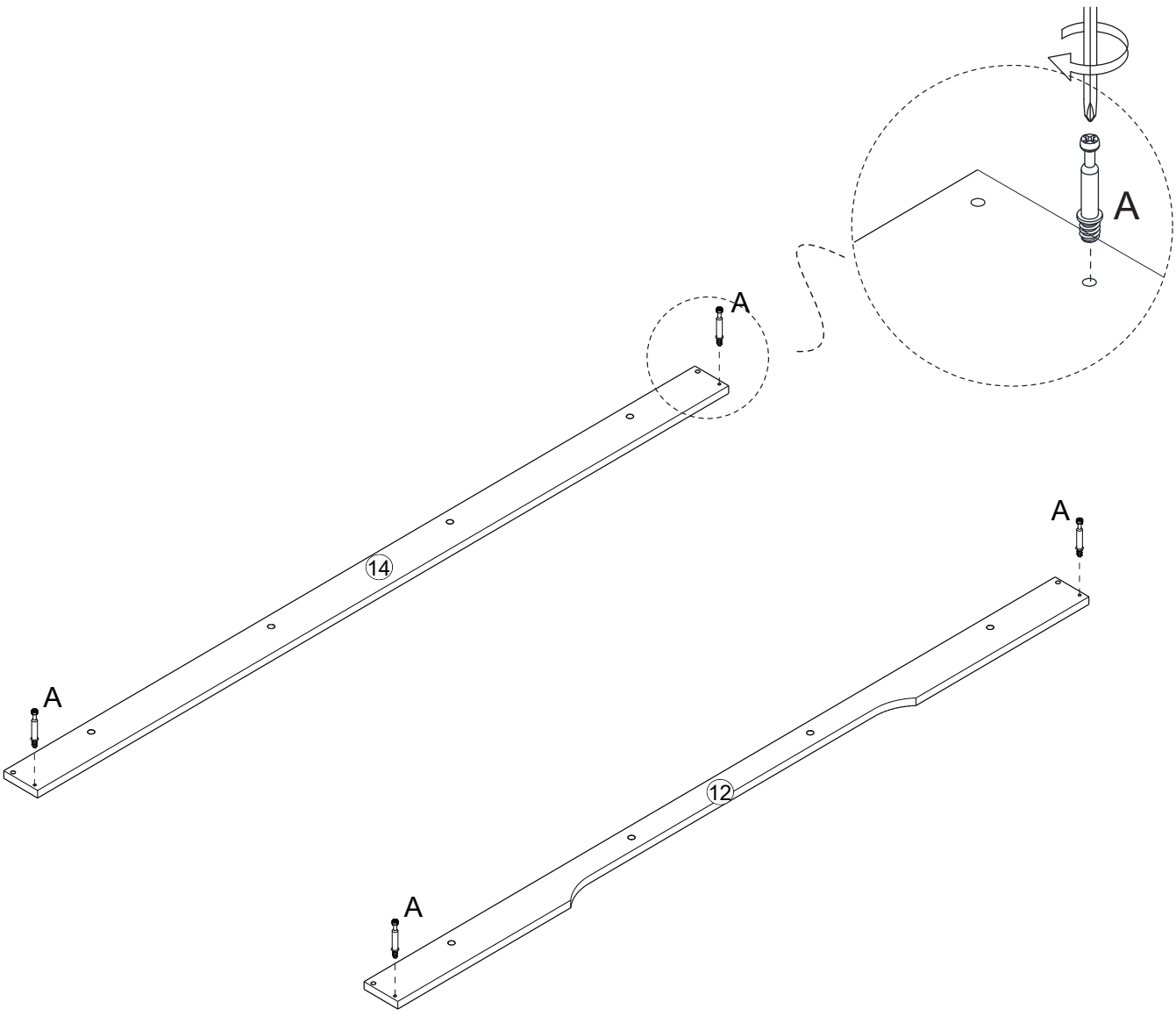

STEP 14

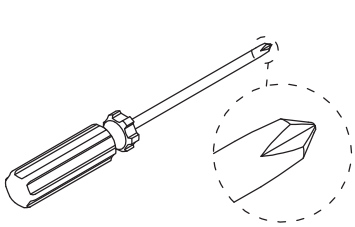

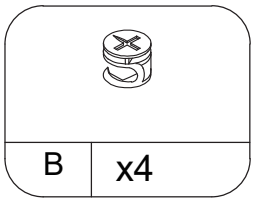

B	x4

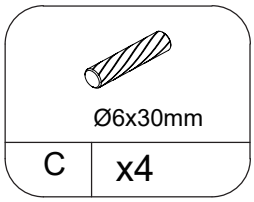

C	x4

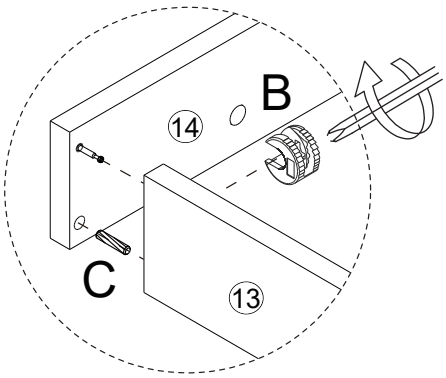

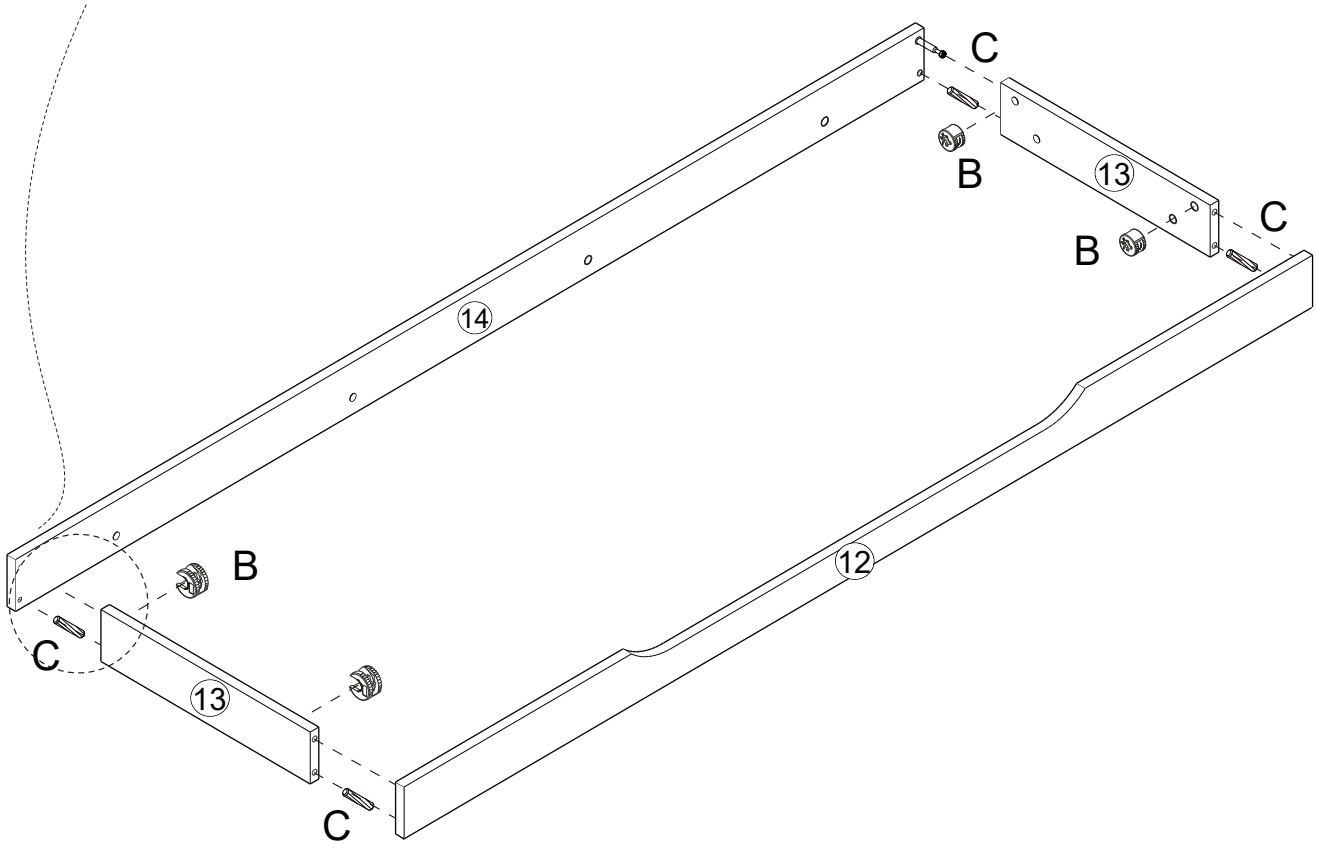

STEP 15

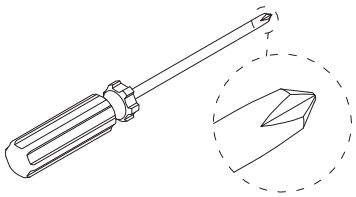



B	x12



Ø6x30mm

C	x8

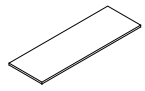

O	x4

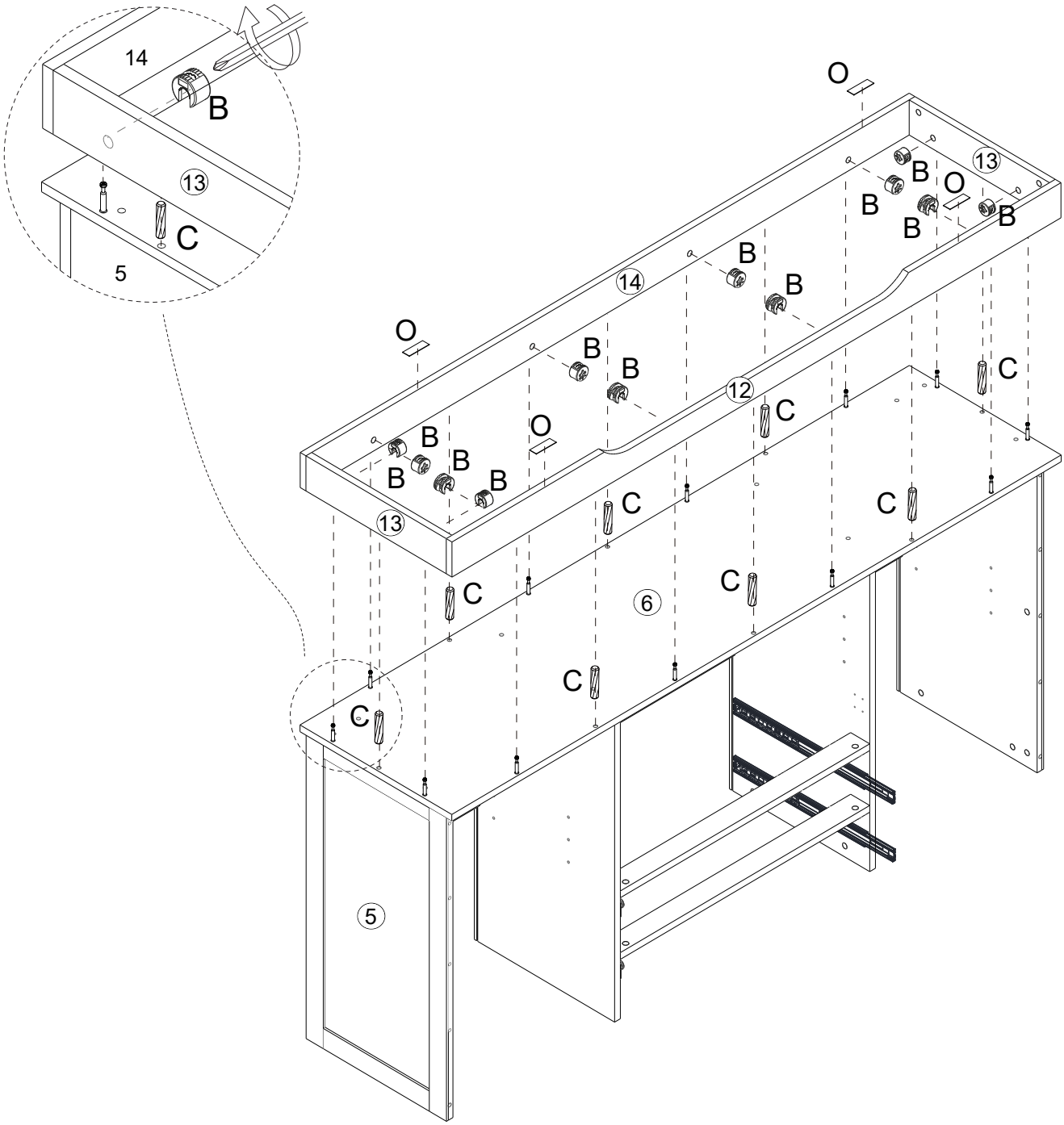

STEP 16

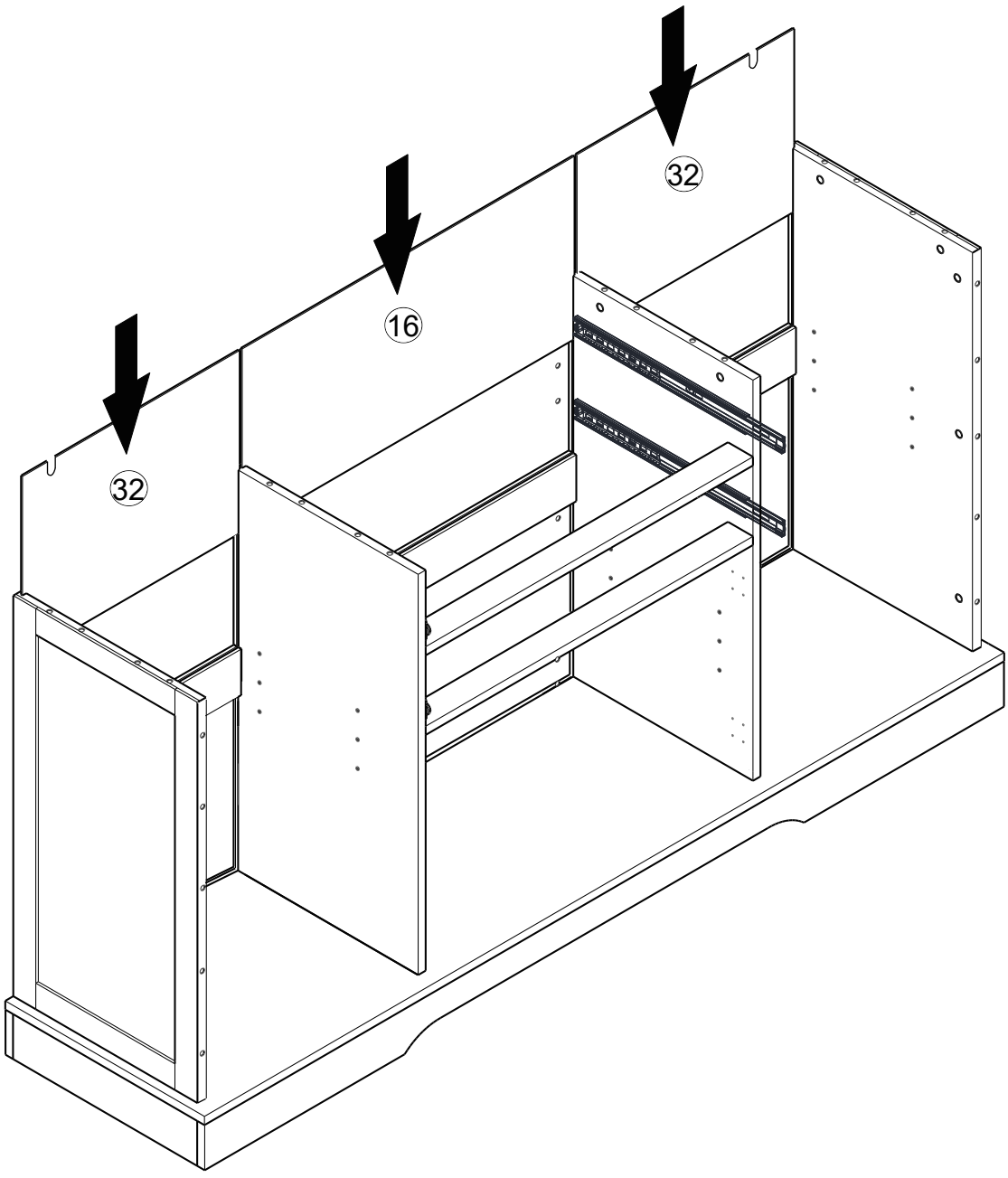

STEP 17

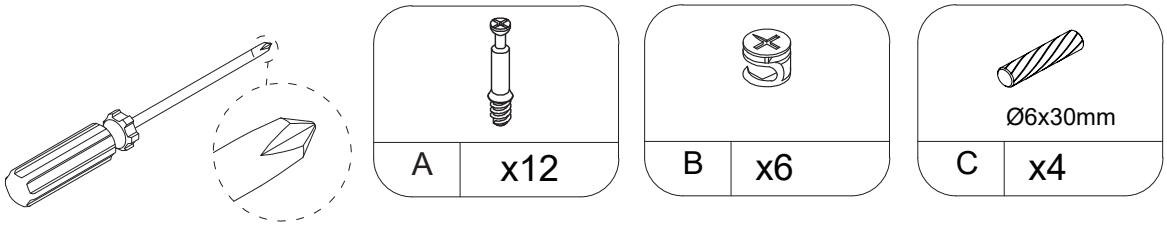

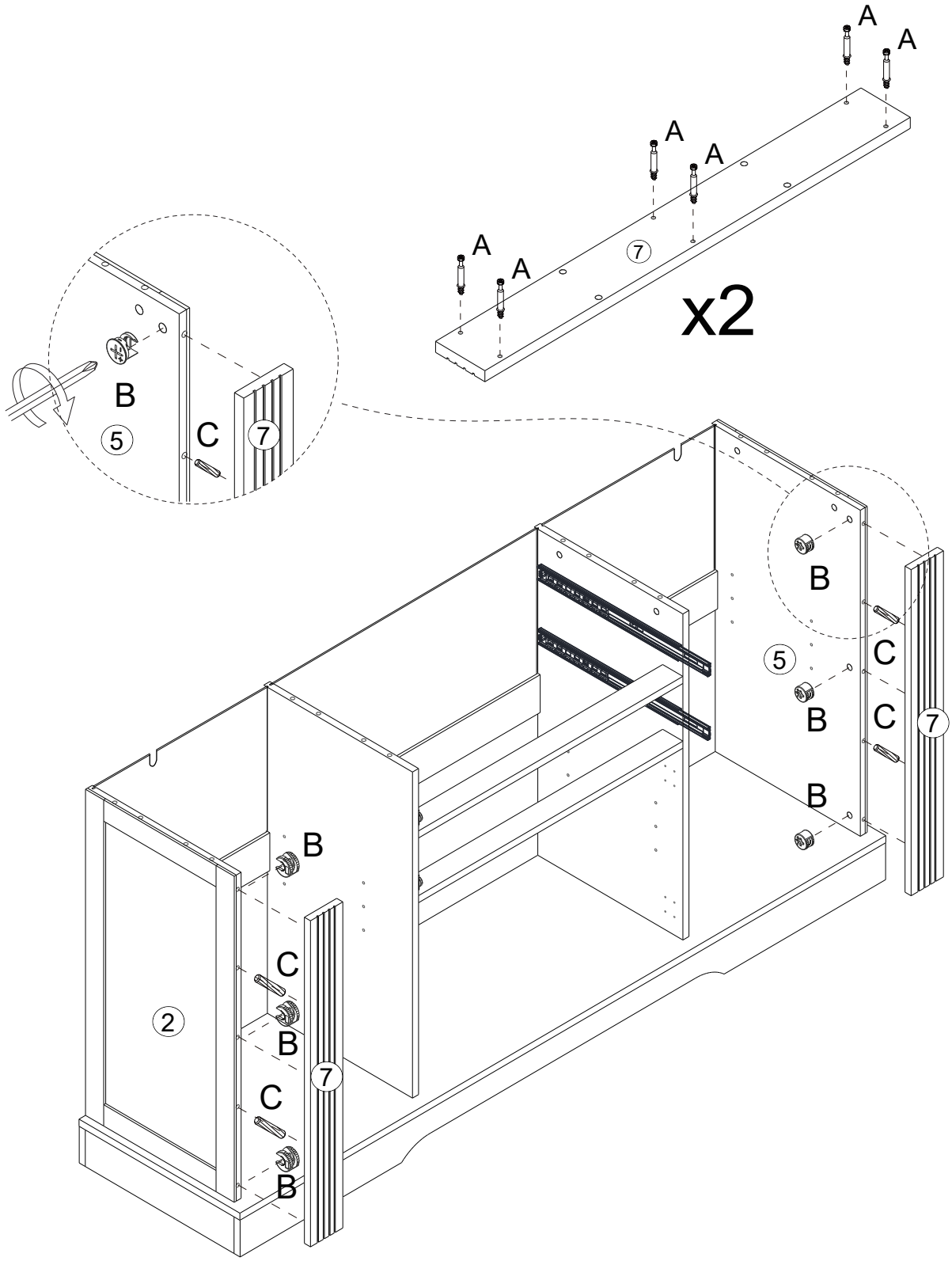

STEP 18

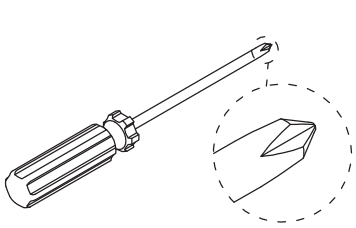

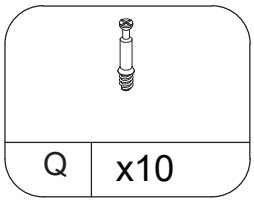

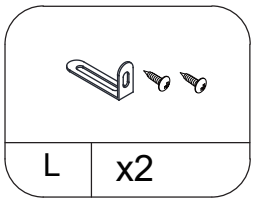

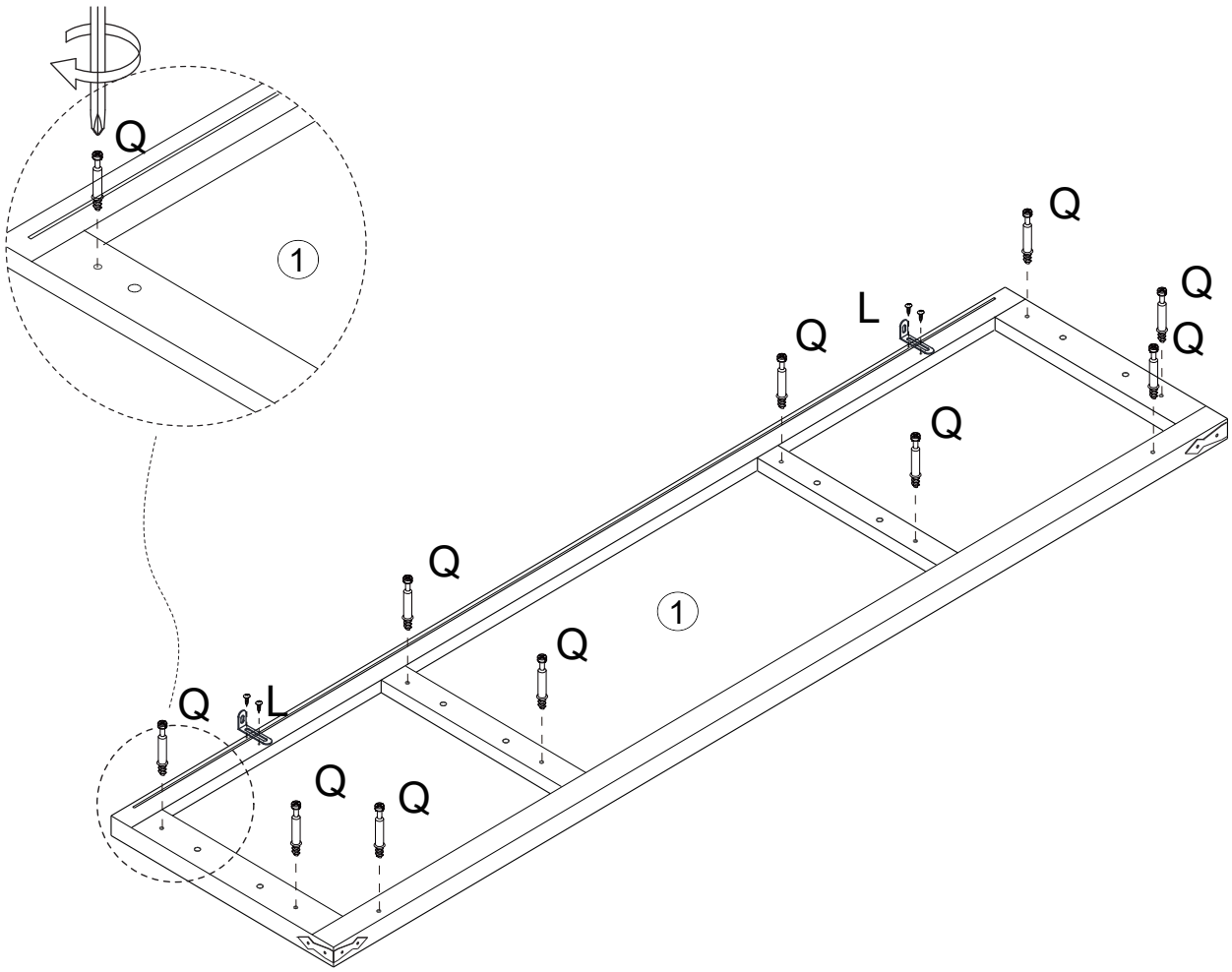

STEP 19

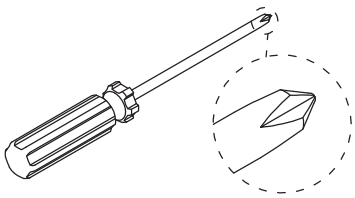

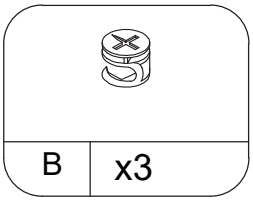

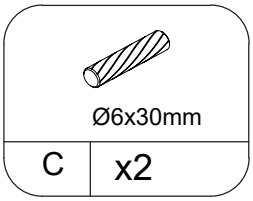

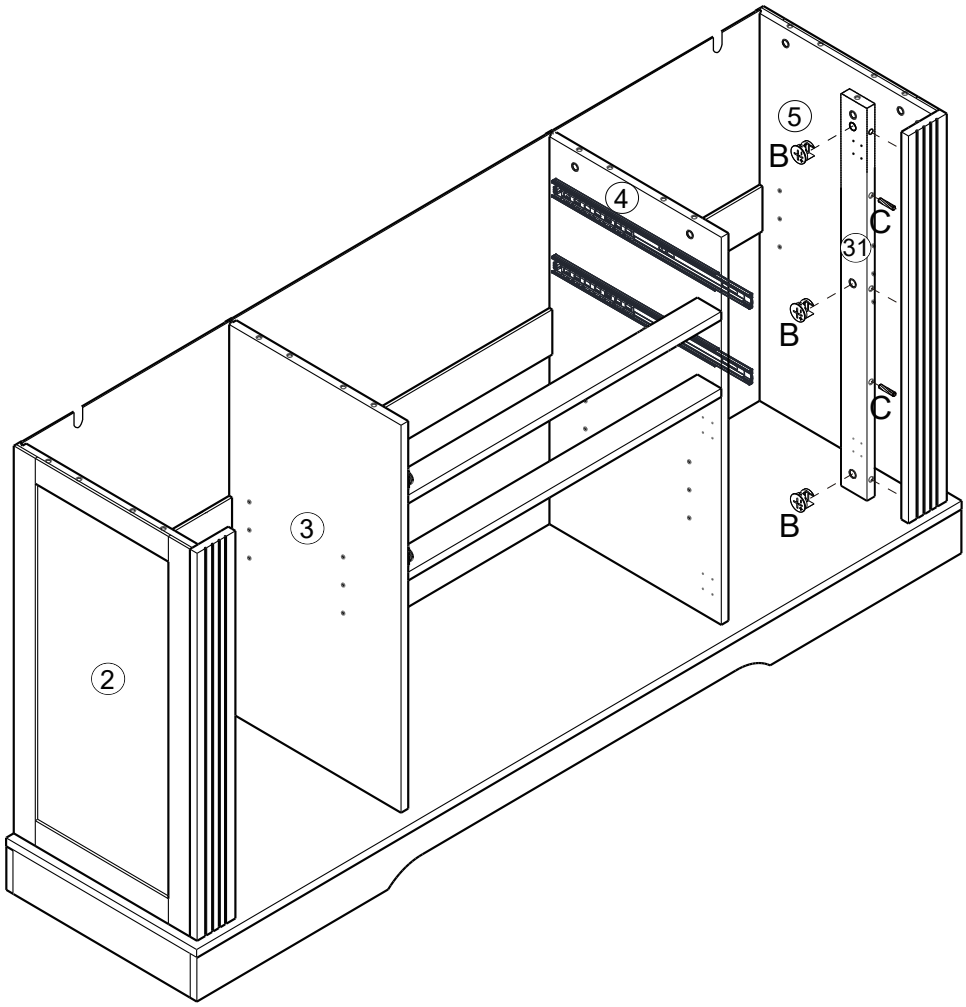

STEP 20

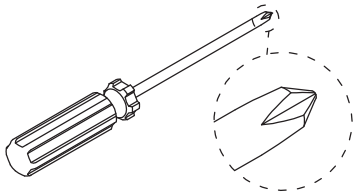

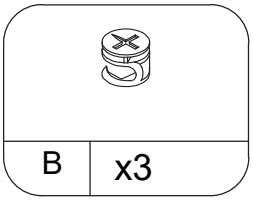

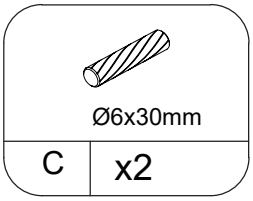

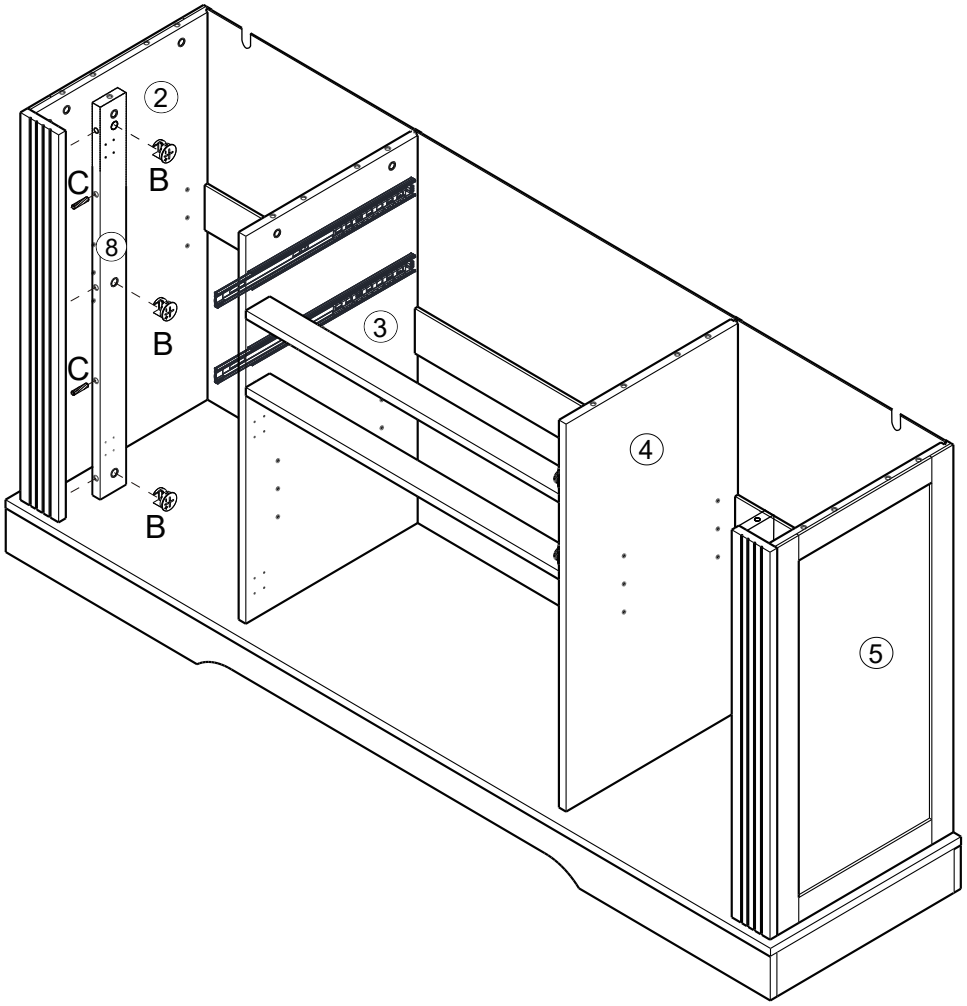

STEP 21

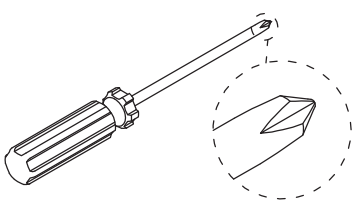

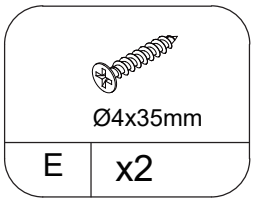

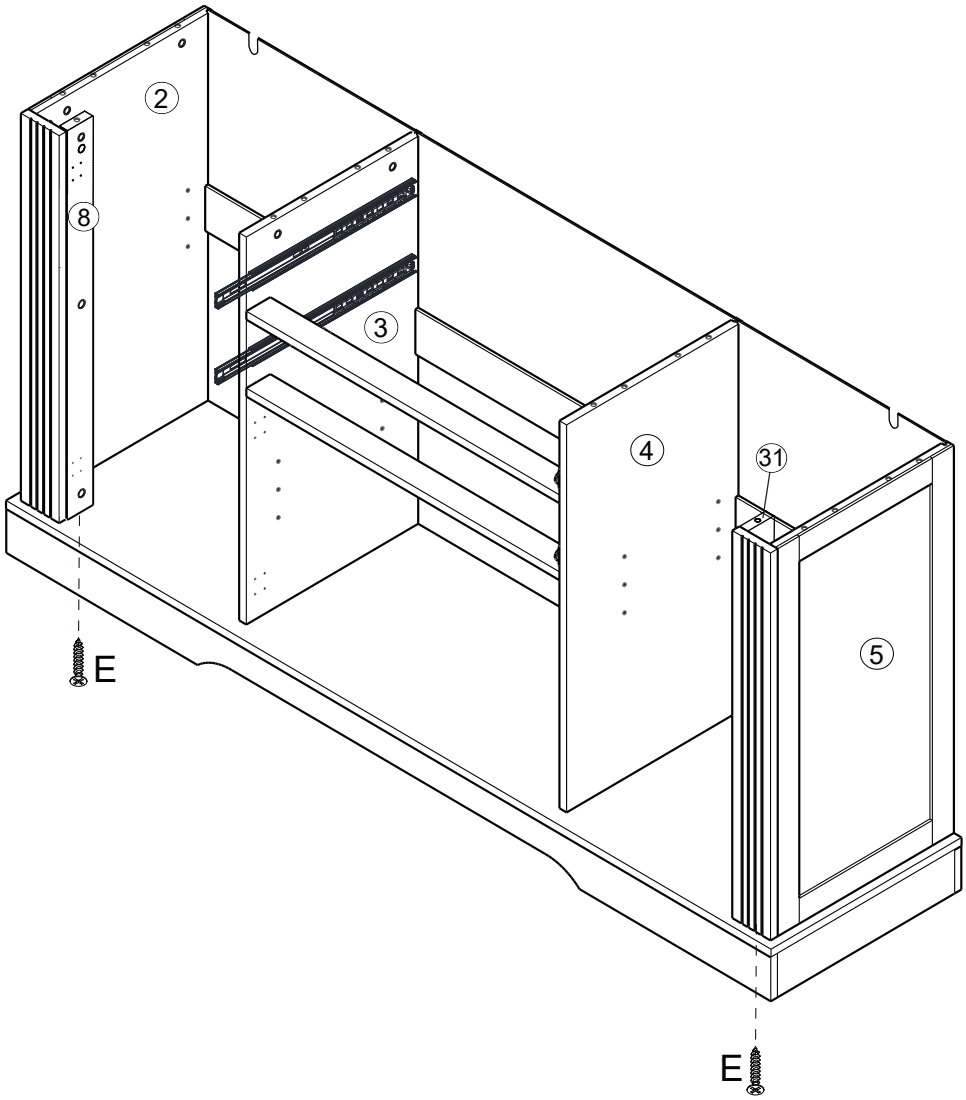

STEP 22

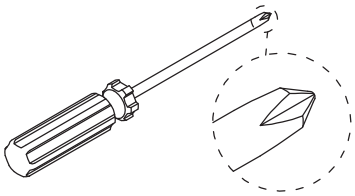

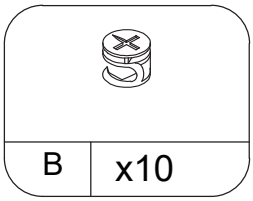

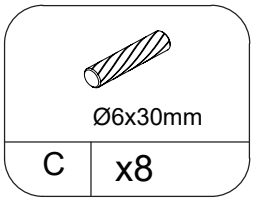

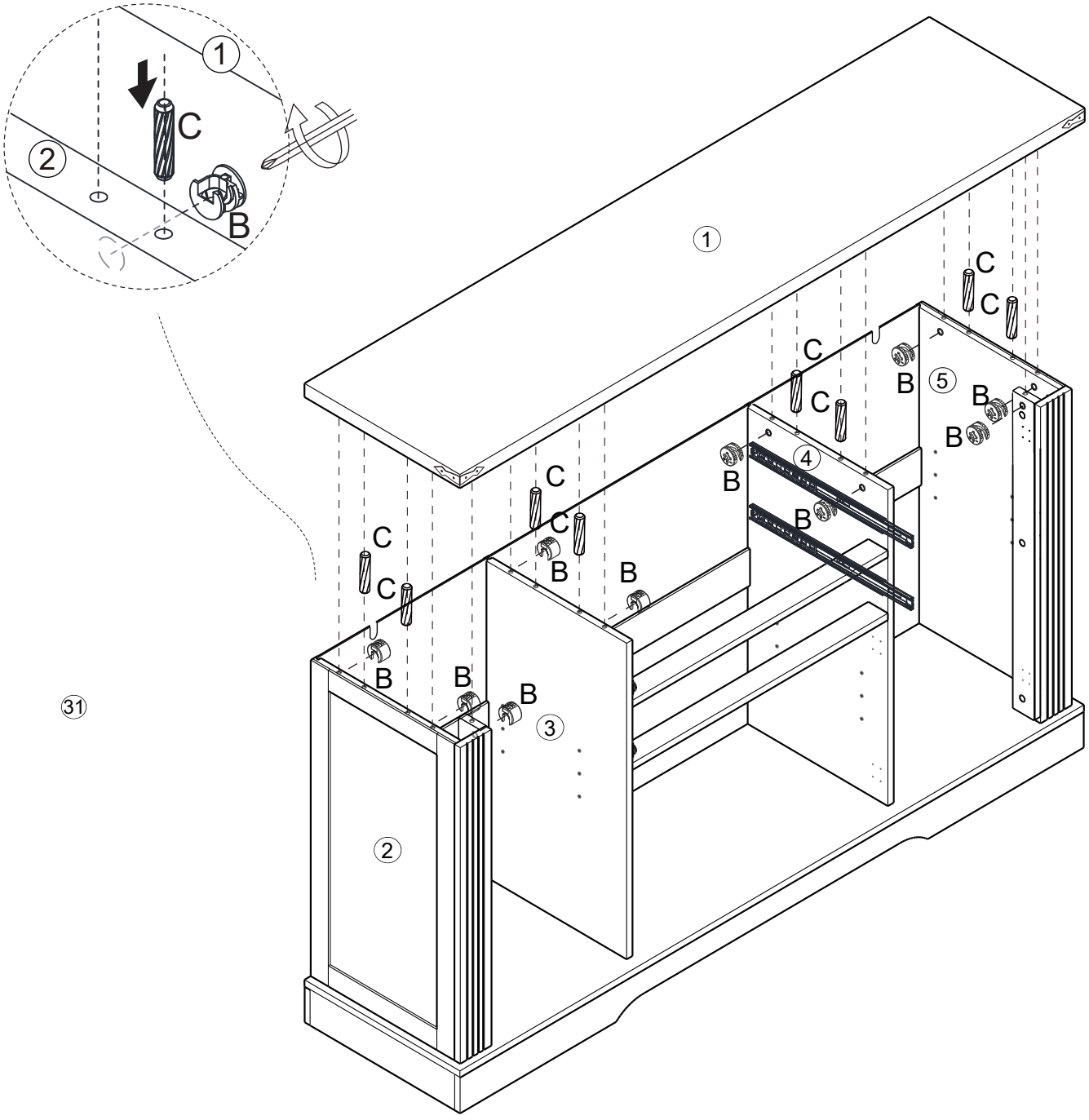

STEP 23

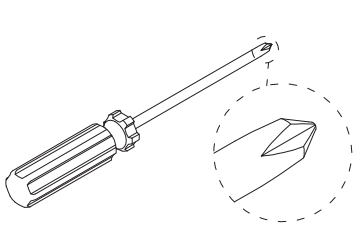

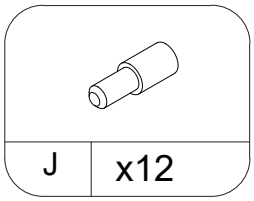

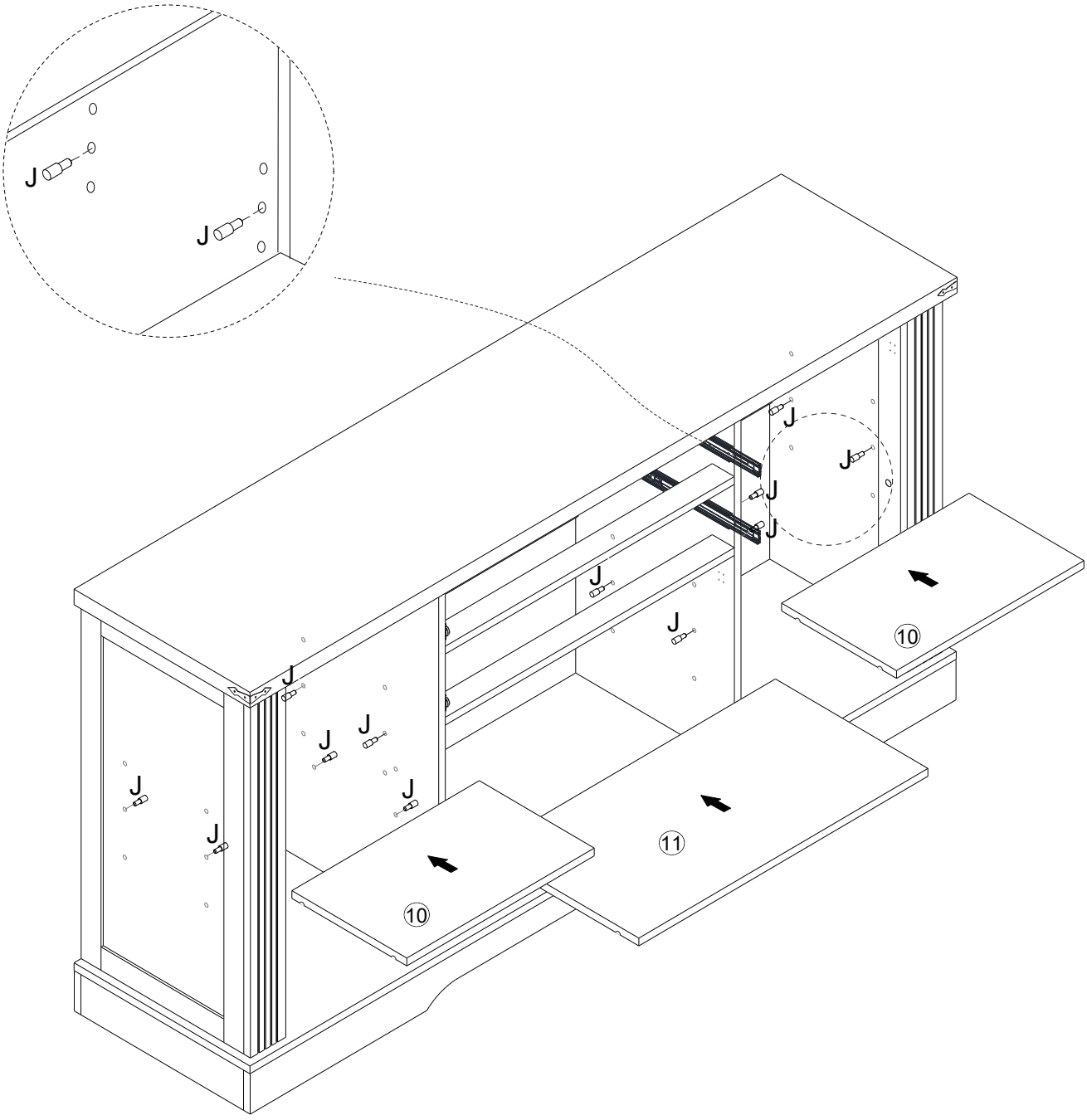

STEP 24

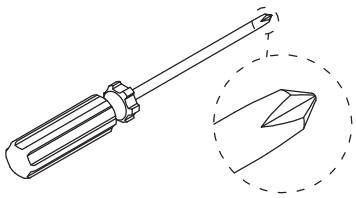

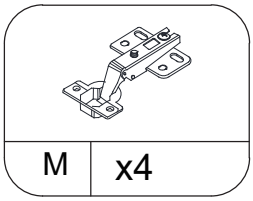

M	x4

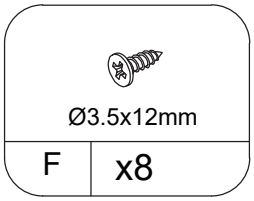

F	x8

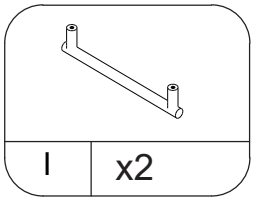

I	x2

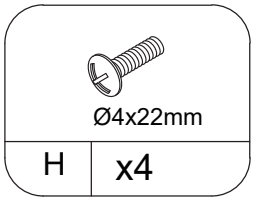

H	x4

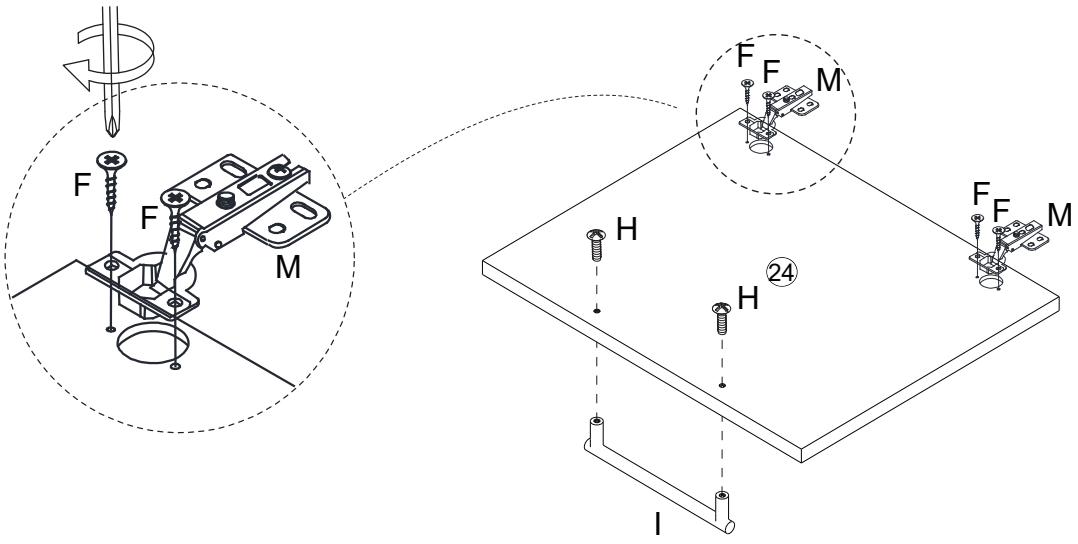

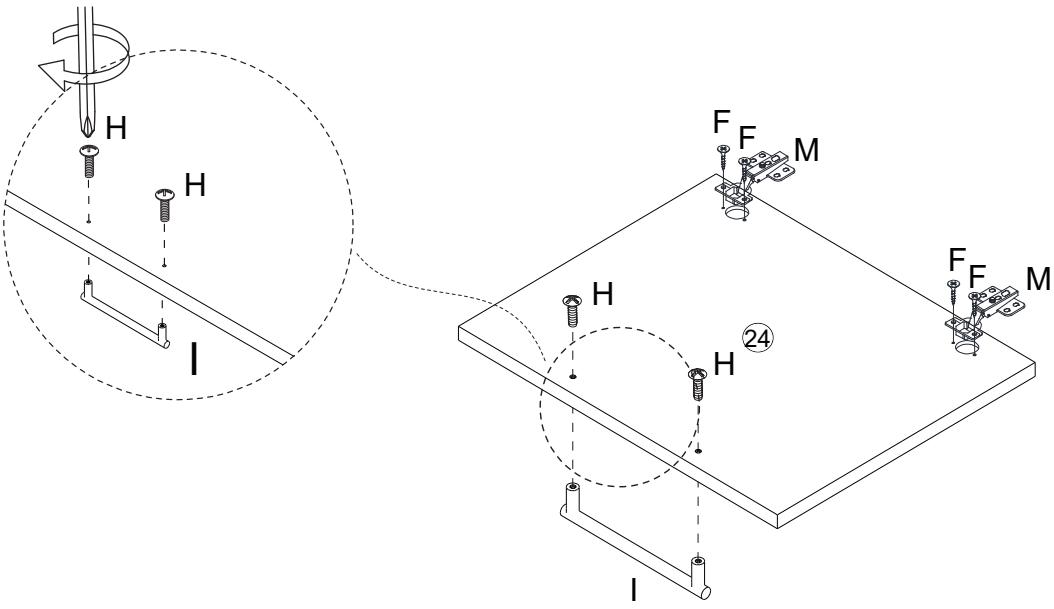

STEP 25

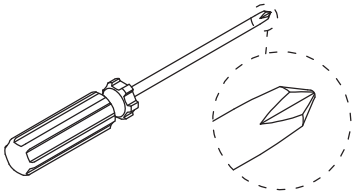

Ø3.5x12mm	
F	x16

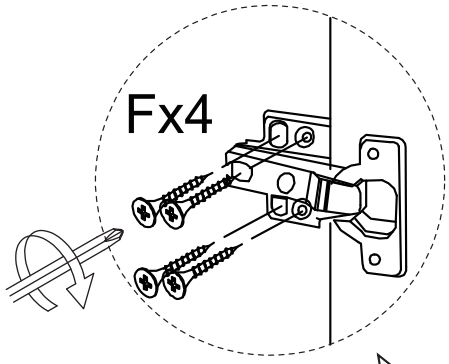

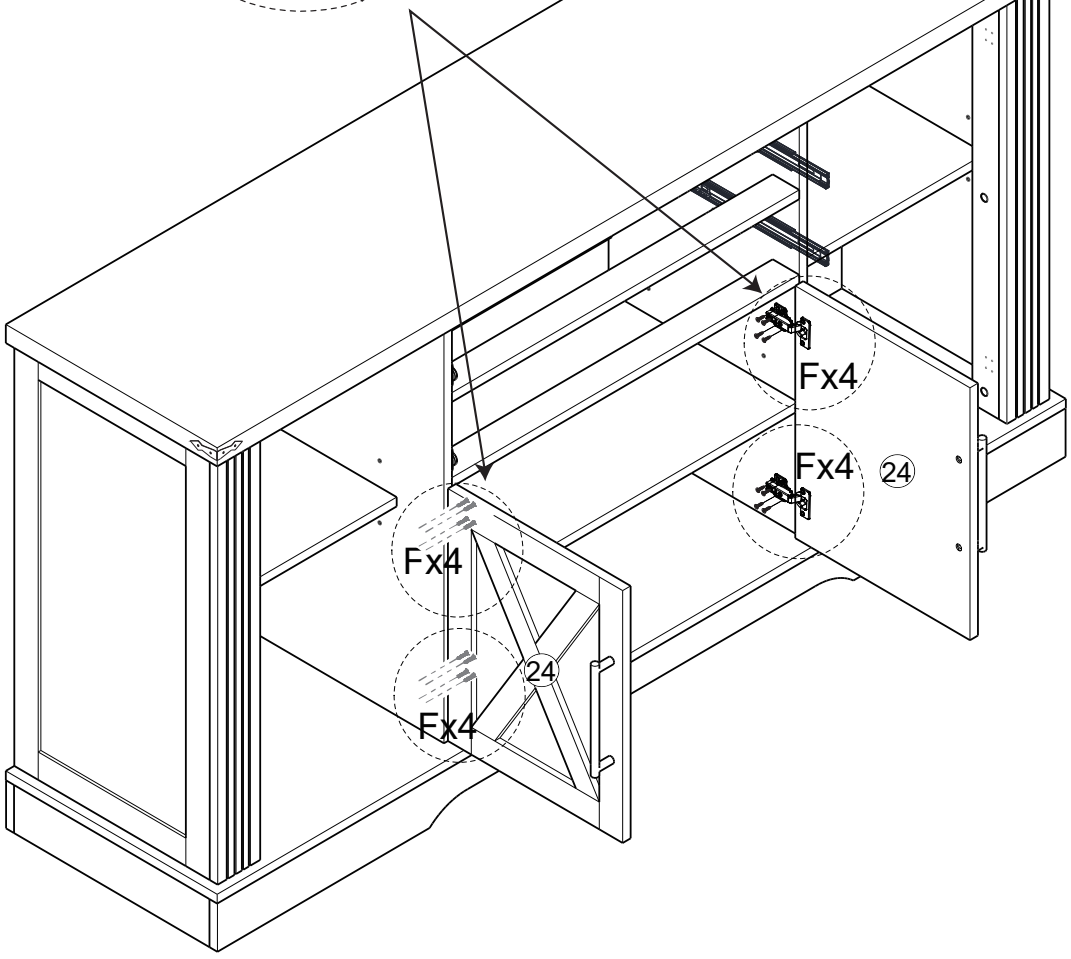

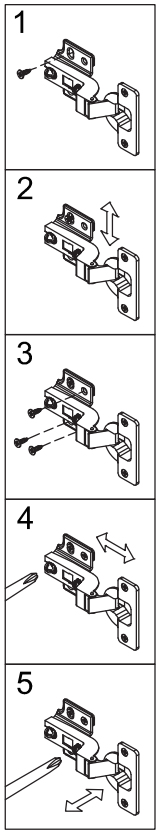

STEP 26

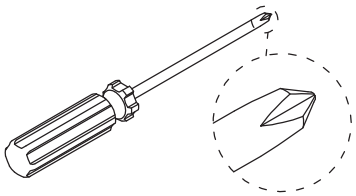

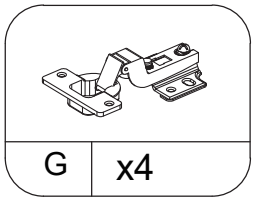

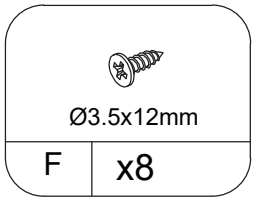

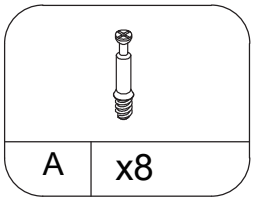

x2

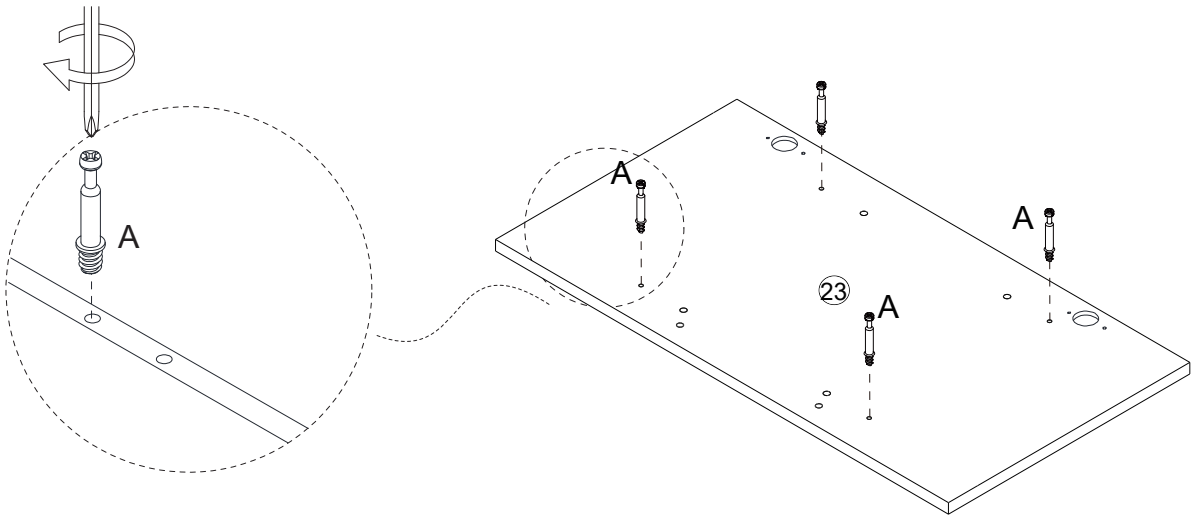

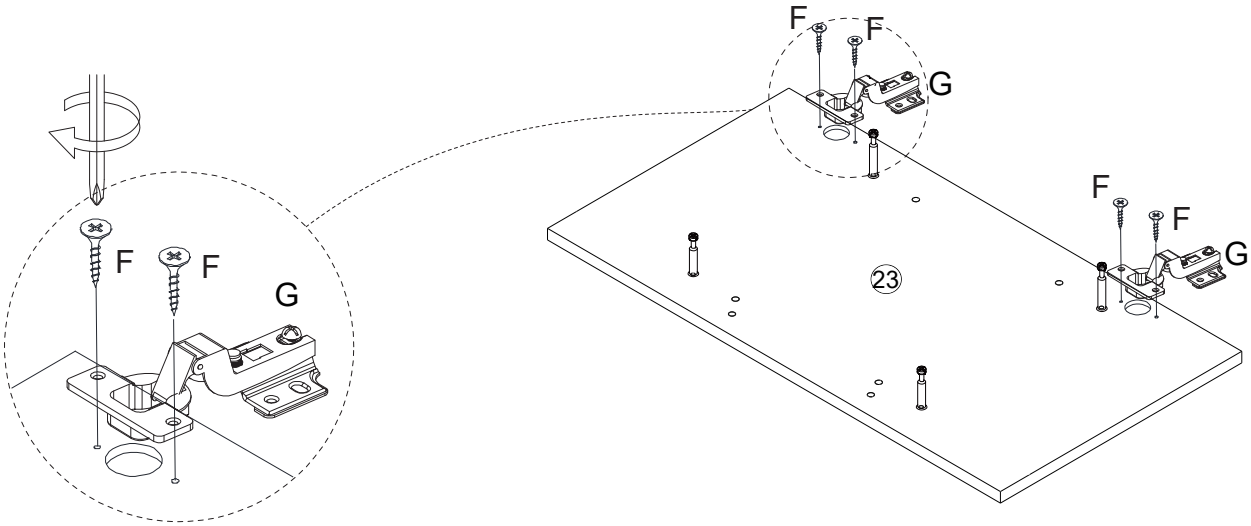

STEP 27

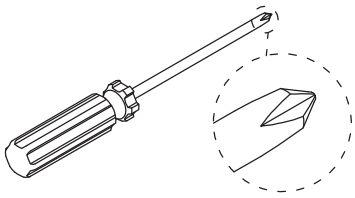

Ø3.5x12mm		Ø4x22mm
F	x16	I	x2	H	x4

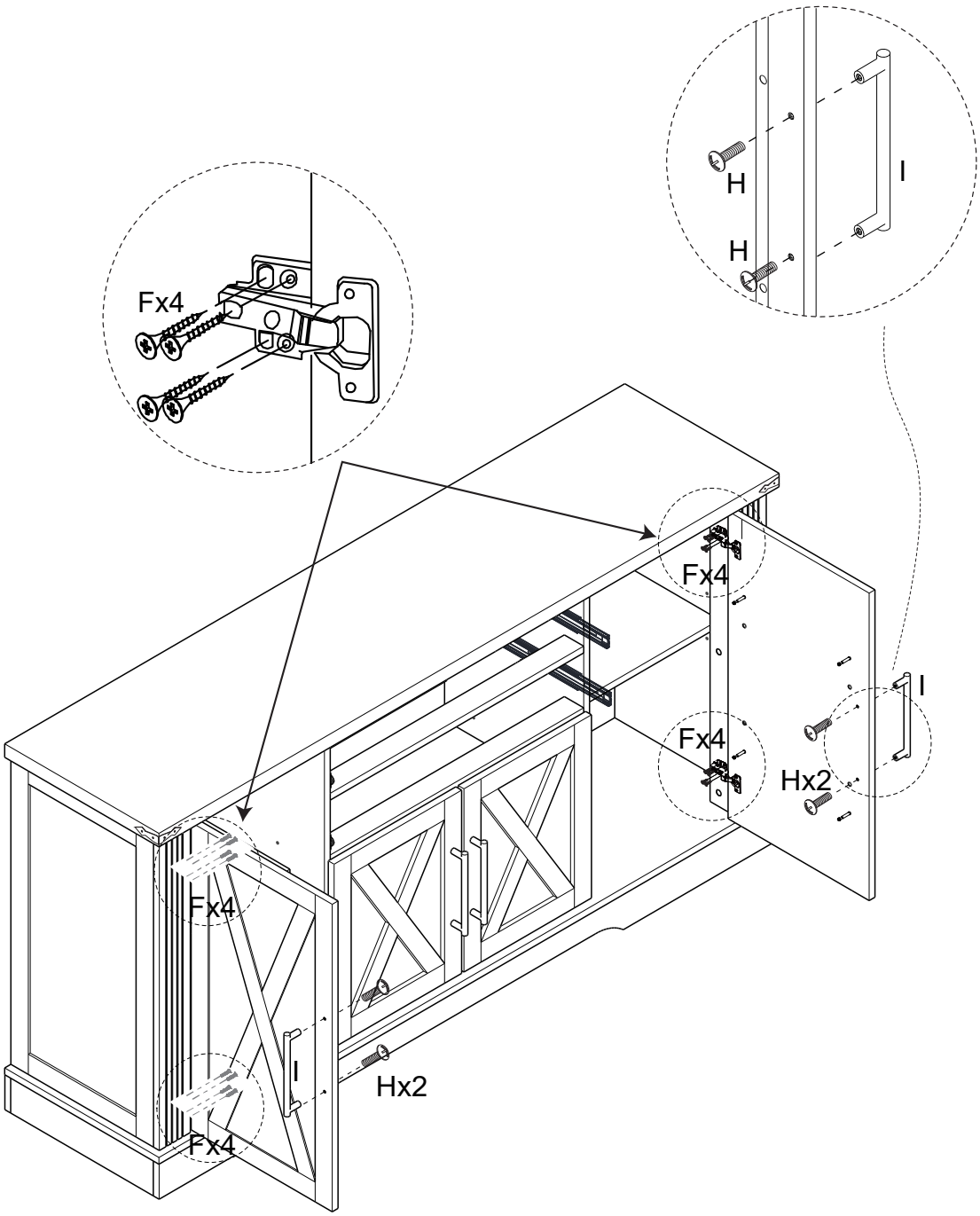

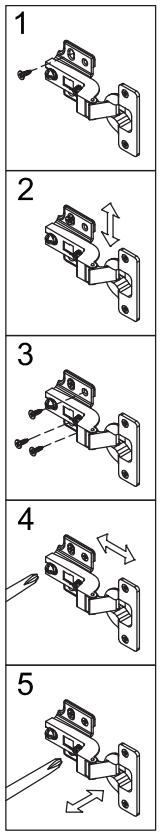

STEP 28

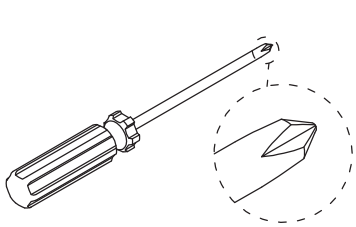

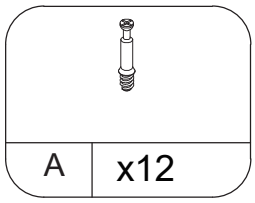

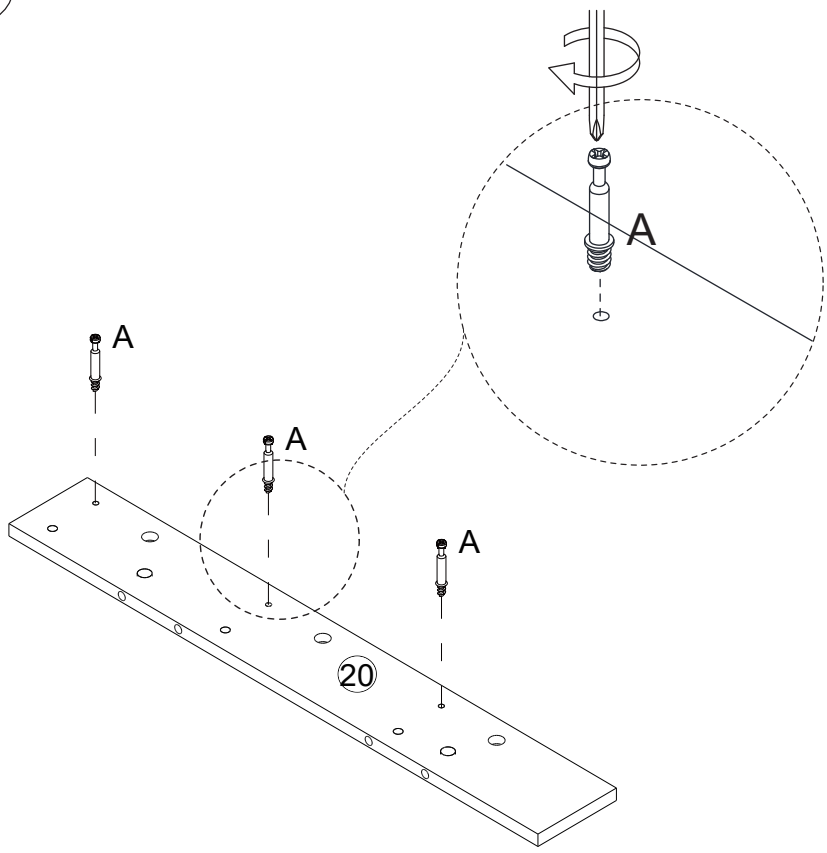

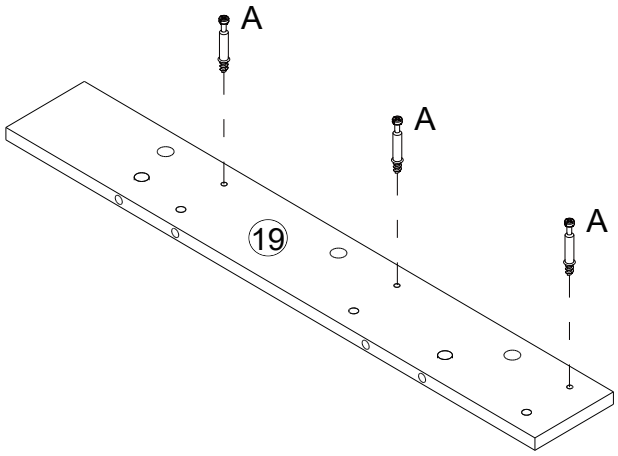

x2

STEP 29

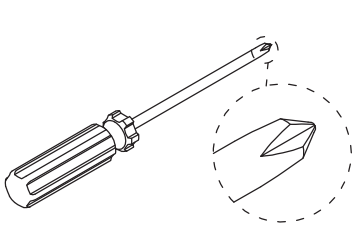

B	x12

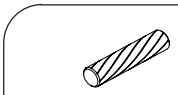

C	x12

Ø6x30mm

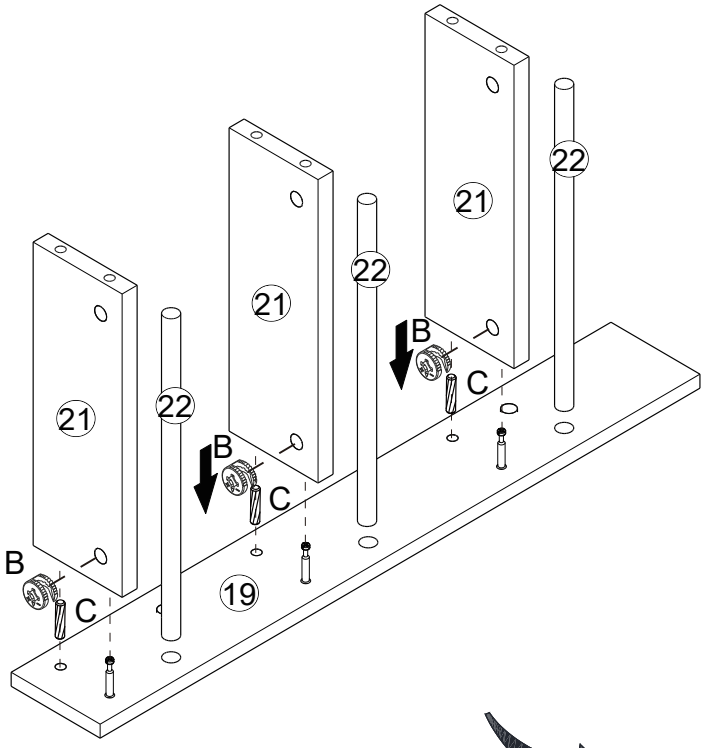

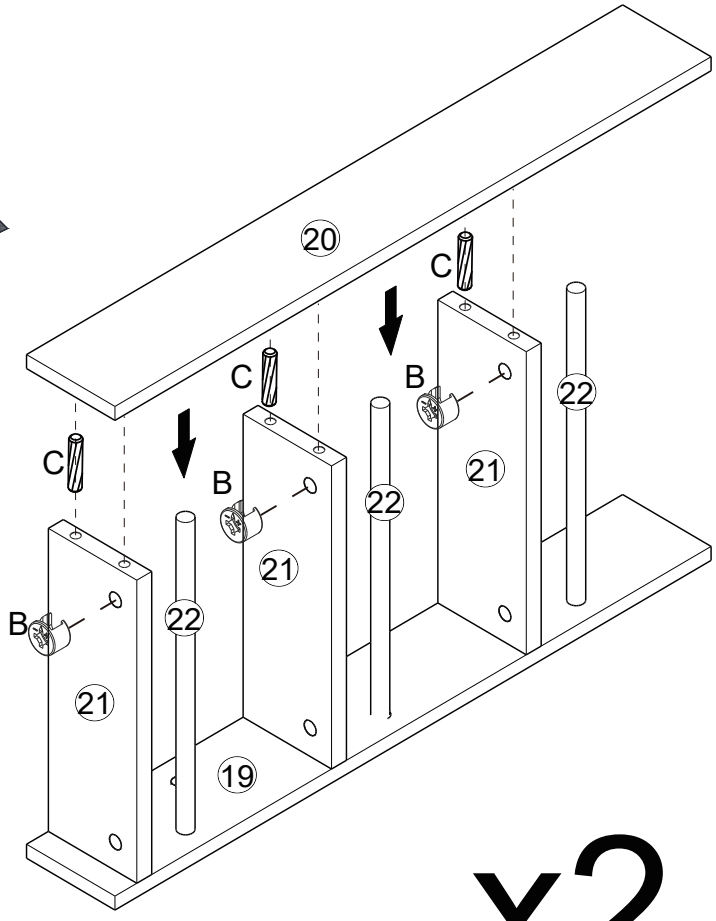

x2

STEP 30

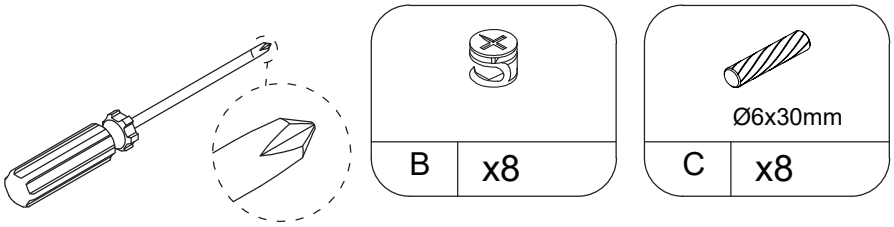

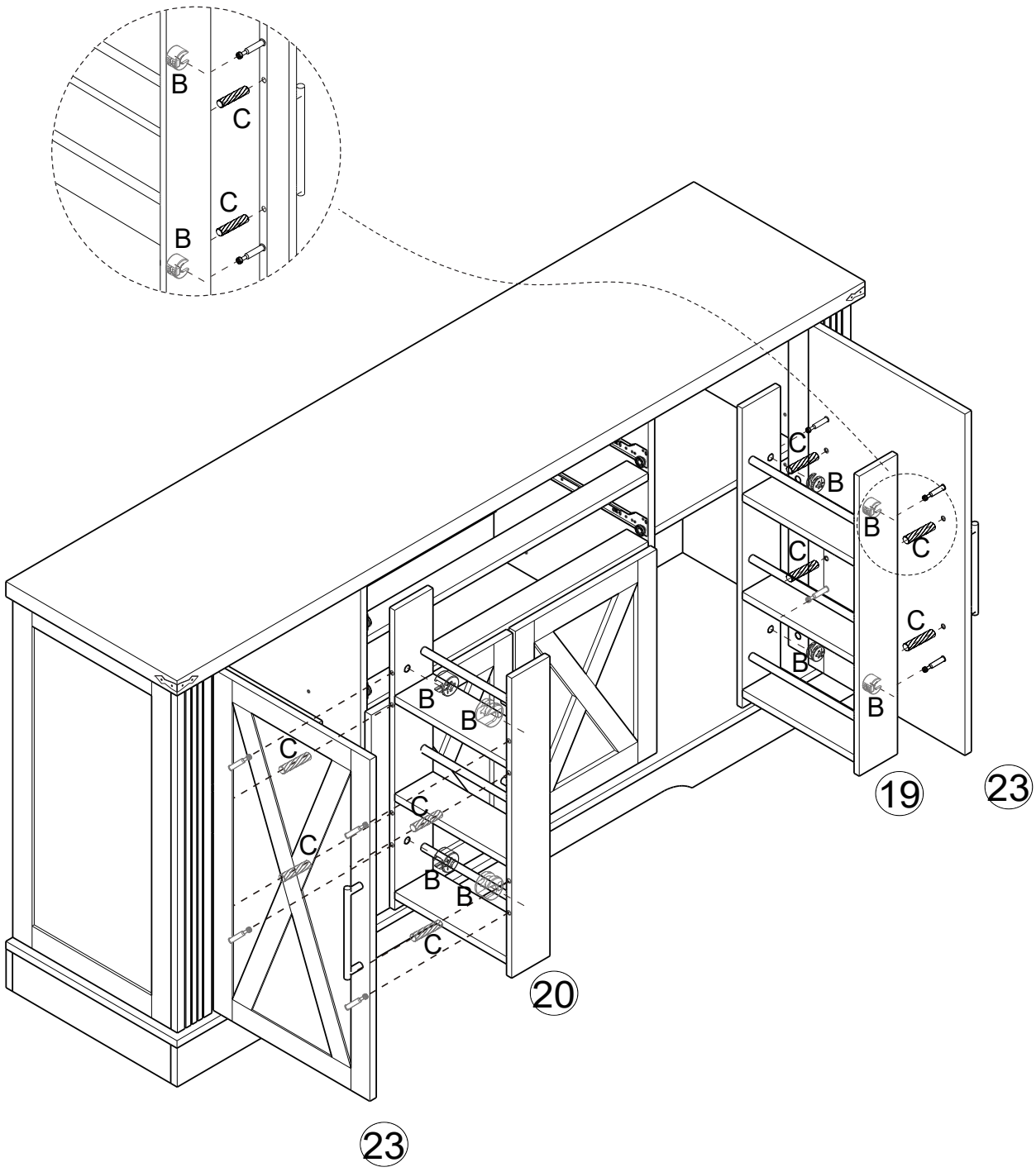

STEP 31

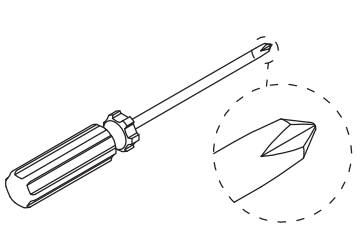

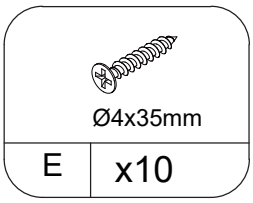

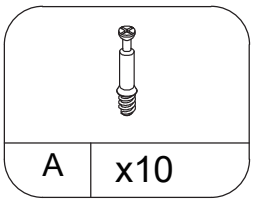

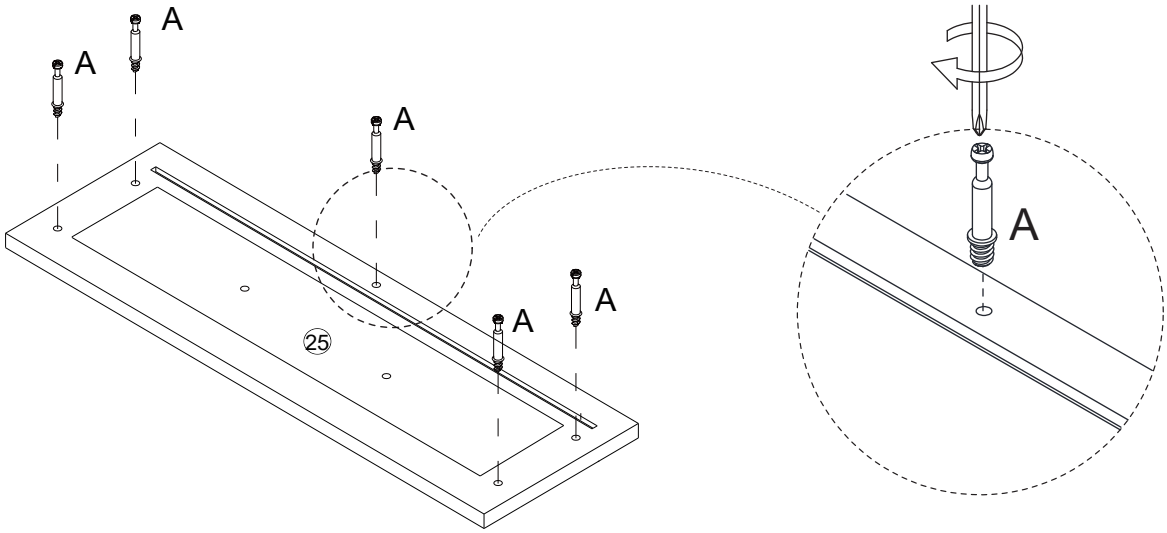

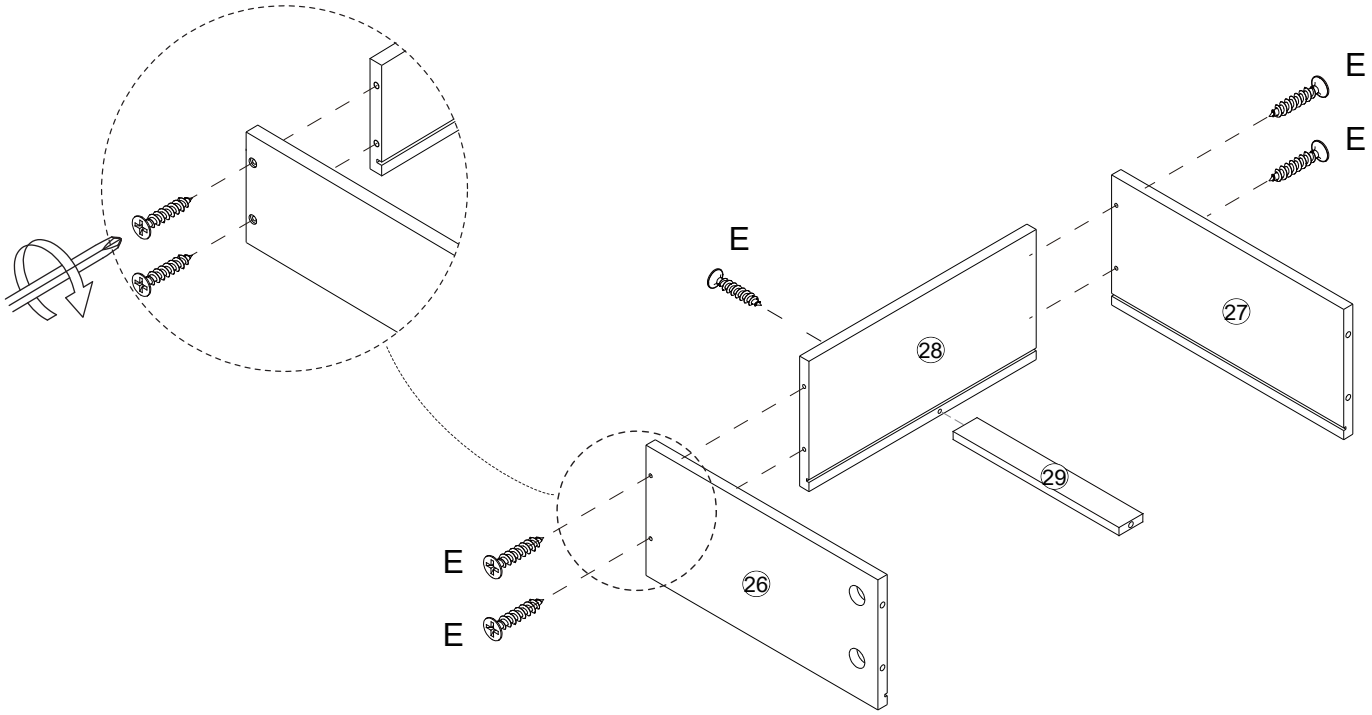

x2

STEP 32

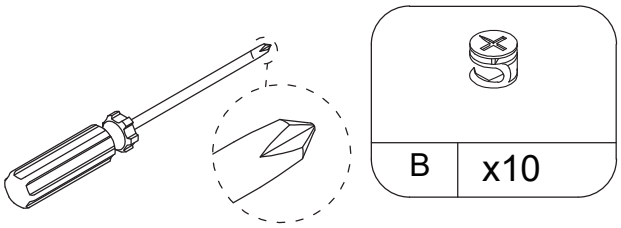

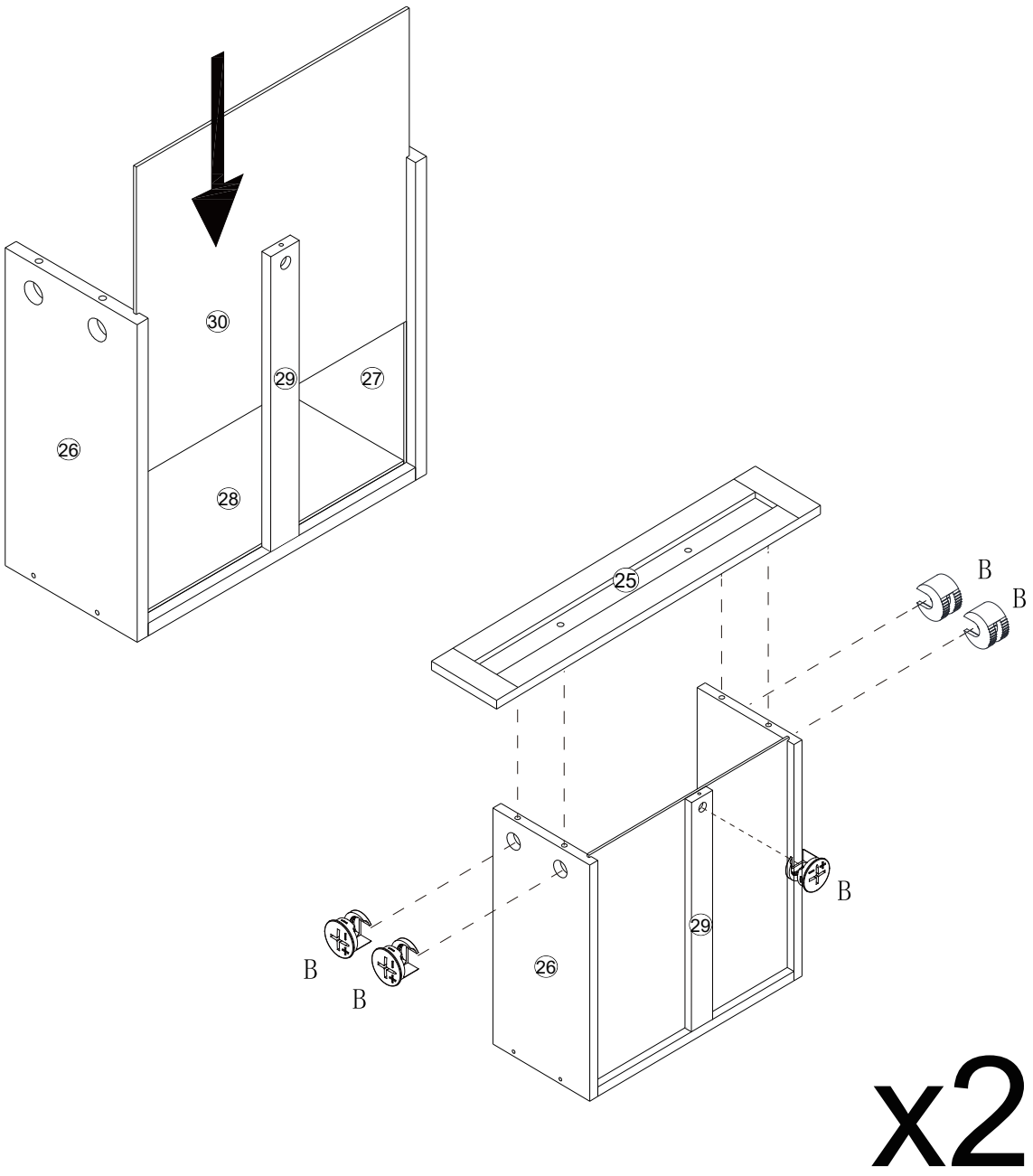

x2

STEP 33

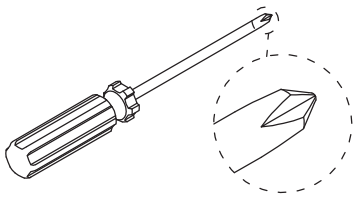

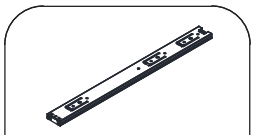

P x4

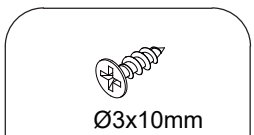

D x12

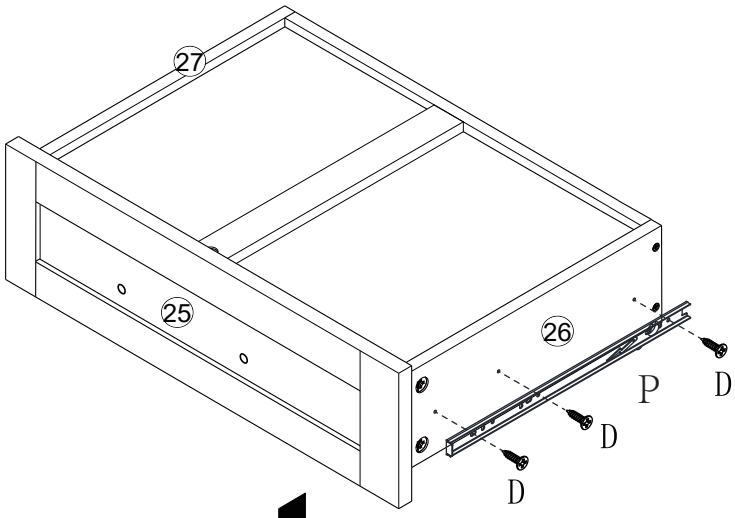

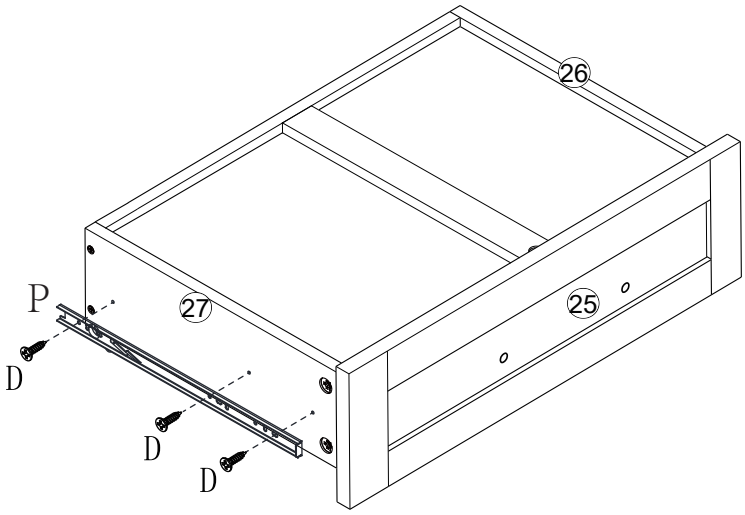

x2

REMARK:

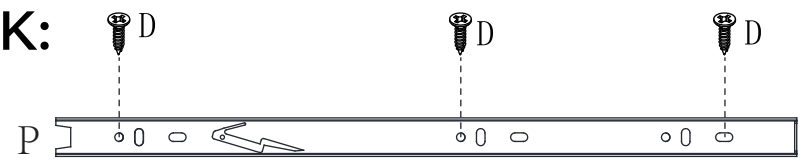

STEP 34

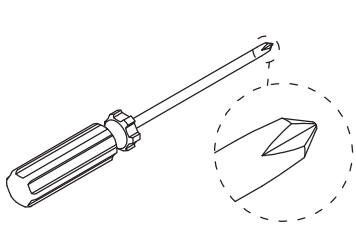

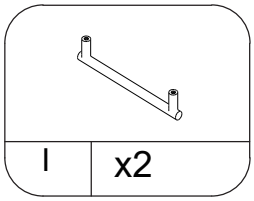

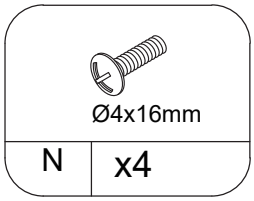

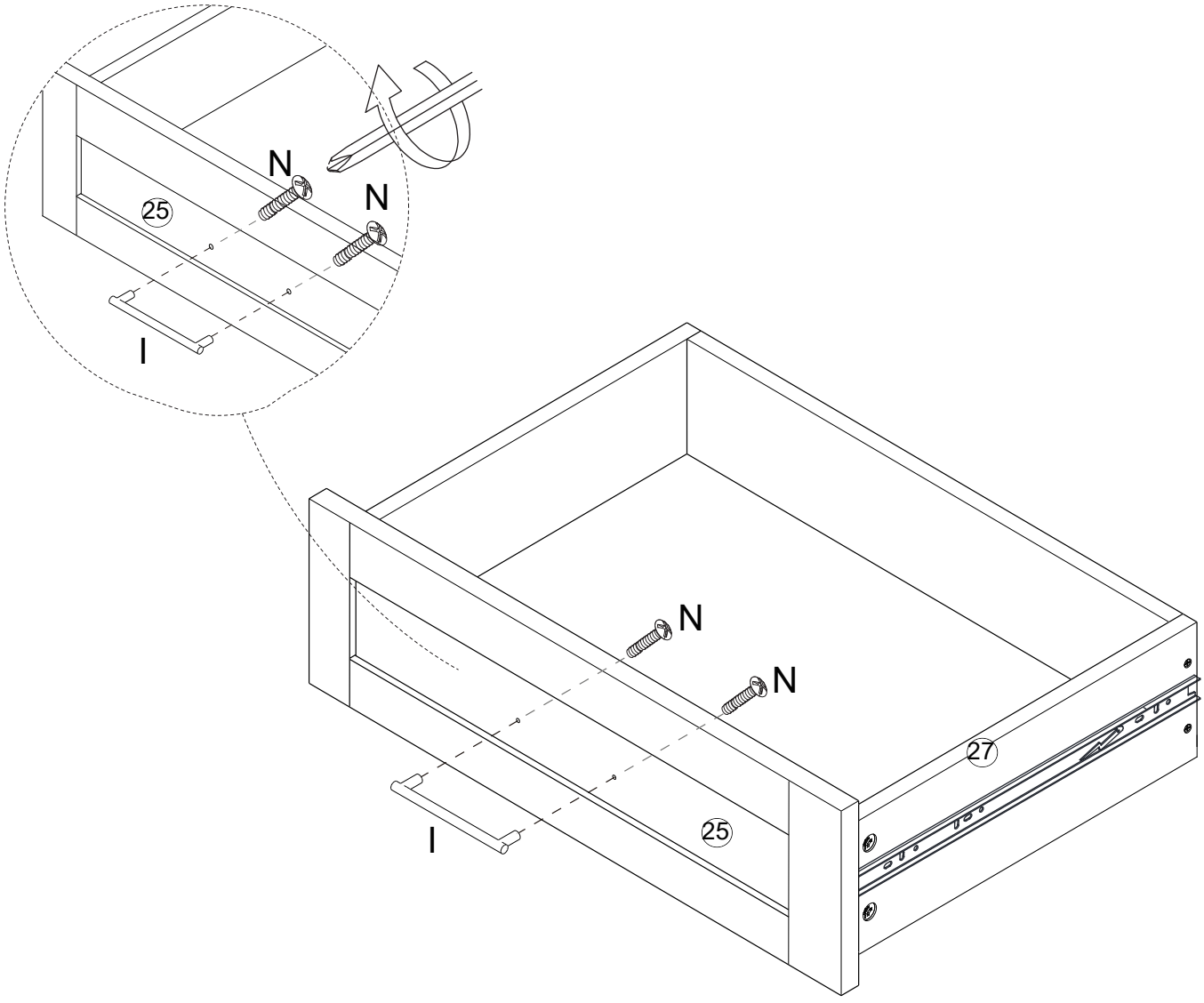

x2

STEP 35

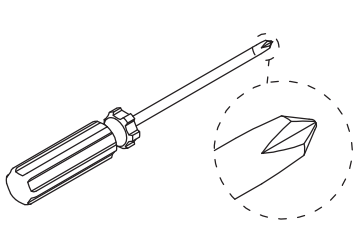

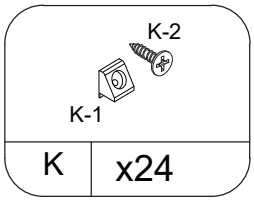

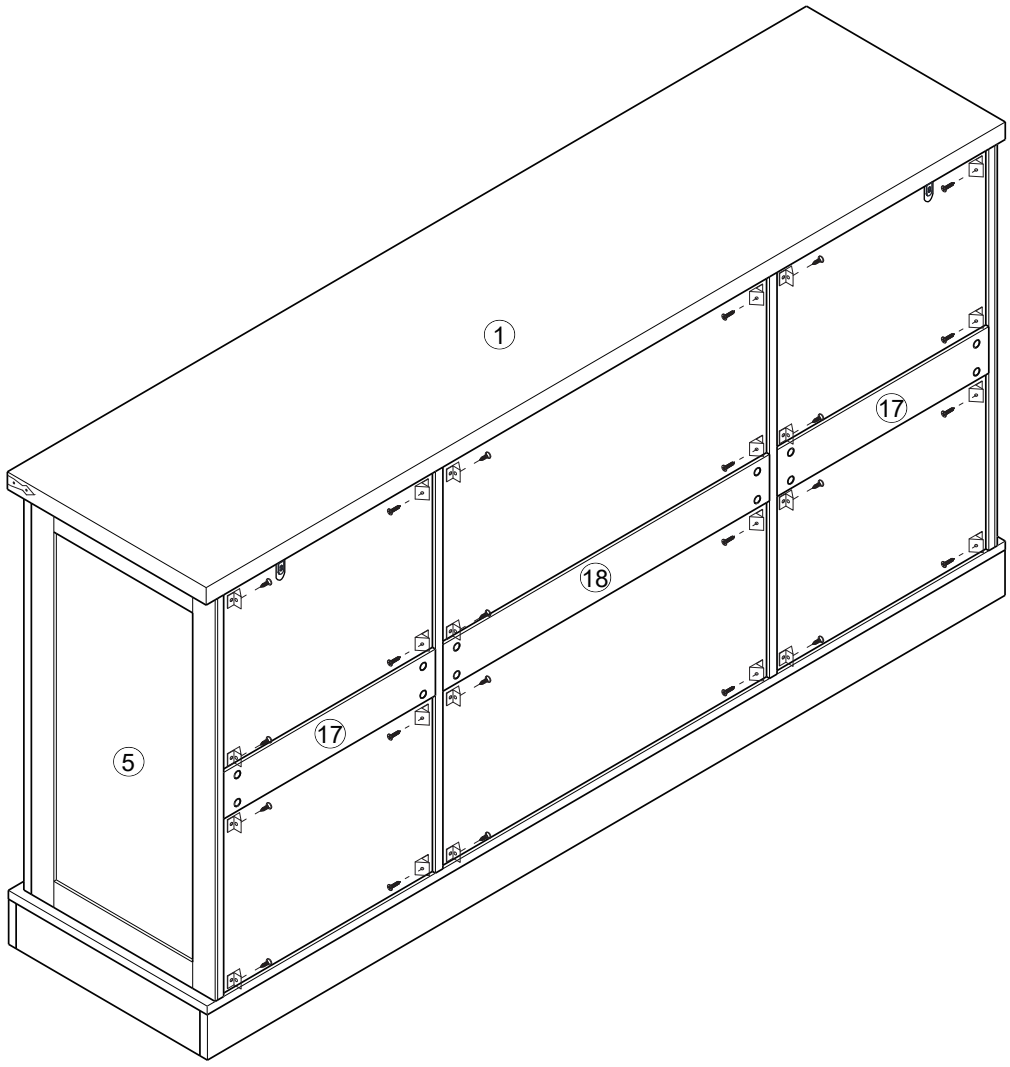

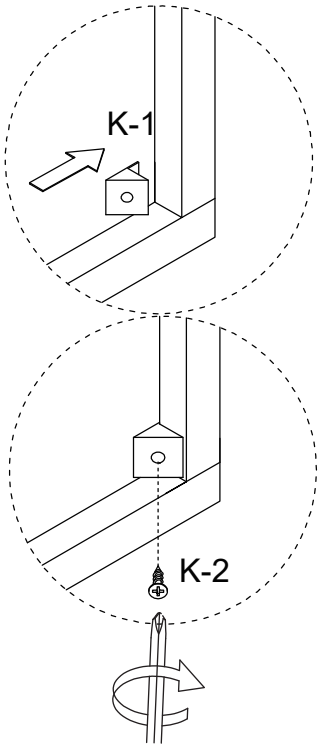

STEP 36

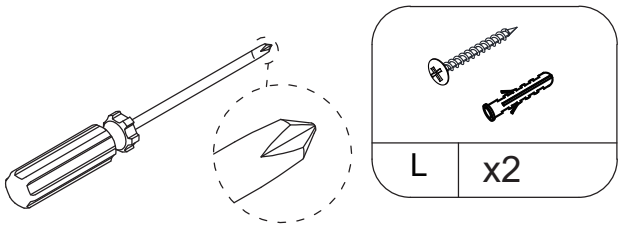

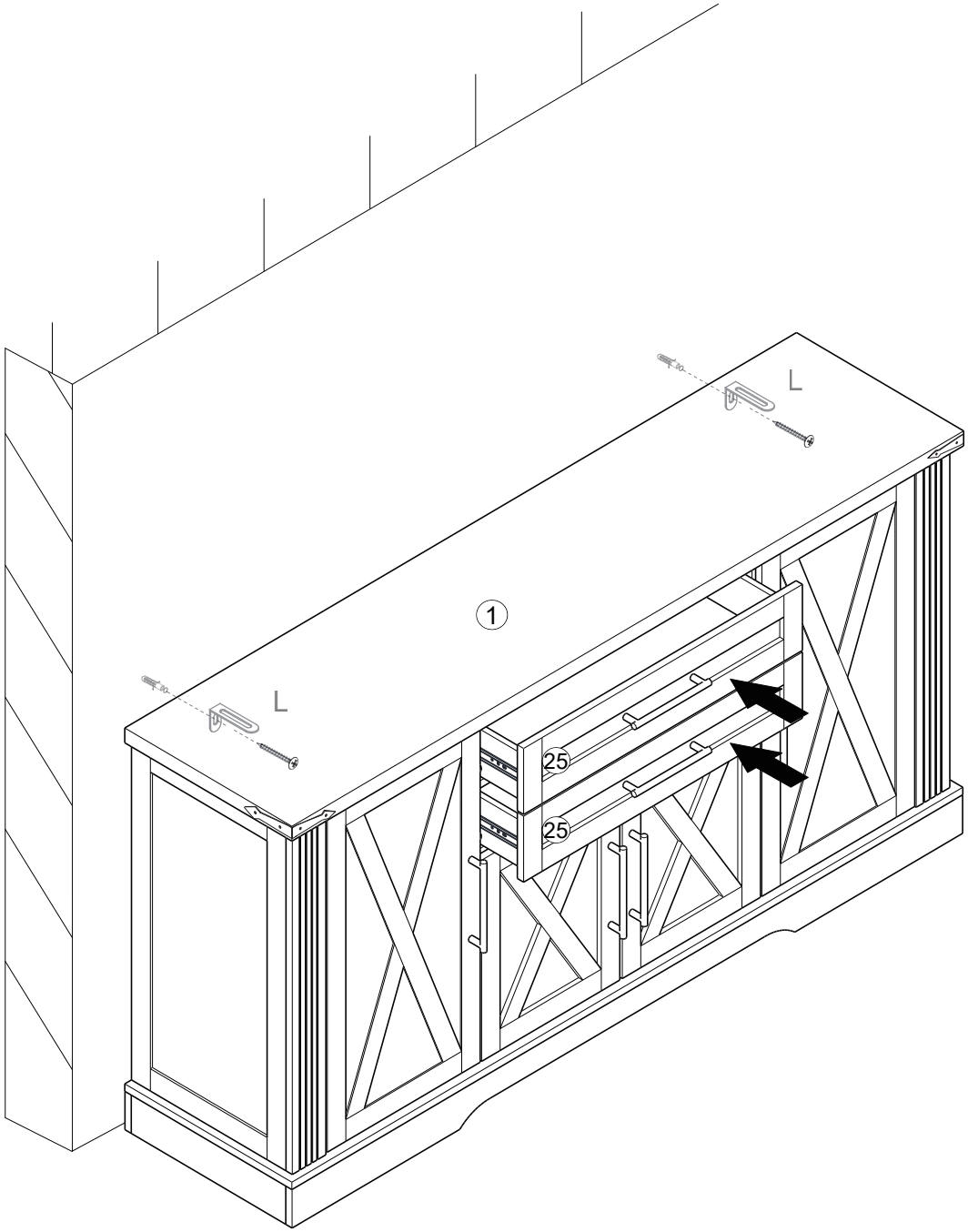

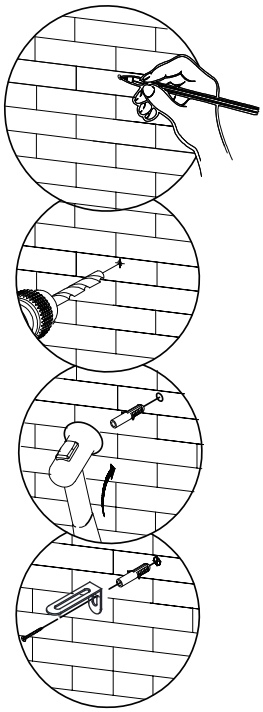

STEP 37

