Viva COMFORT

48 INCH COUNTERTOP

WITH RIGHT SINK CUTOUT

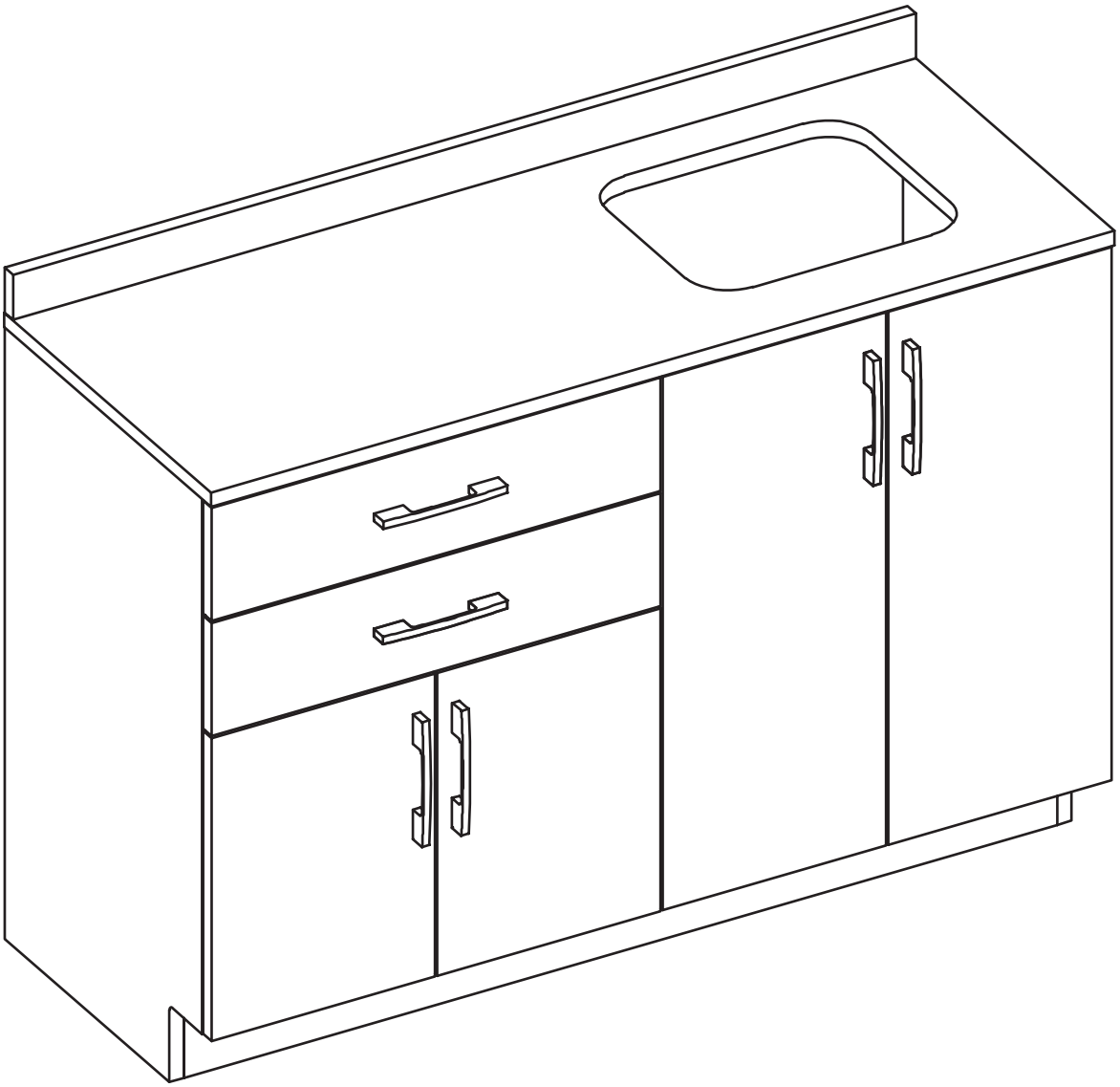

ADIME902-BASE-48-RS-GRY

USER GUIDE

Viva COMFORT

Thank you for your purchase.

Viva Comfort maintains a strong practice of ongoing development of products and commercial research.

We recognize that starting and maintaining a medical practice is expensive. We'll help make the process cost-effective and elegant. Additionally, our team of specialists will ensure everything you need works as efficiently as possible, so you can effectively treat your clients.

Table of Contents

2 Parts

4 Hardware

5 Assembling Instructions

20 Medical Sink with Faucet and Handles Installation

24 Warranty

25 Notes

Parts

1 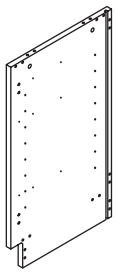 Left Side Panel	2 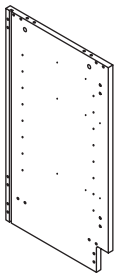 Right Side Panel	3 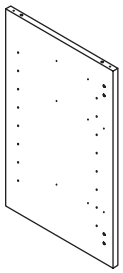 Middle Panel	4 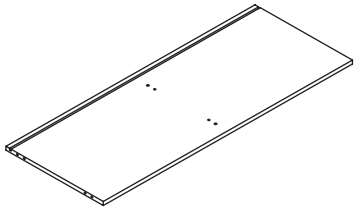 Bottom Panel
5 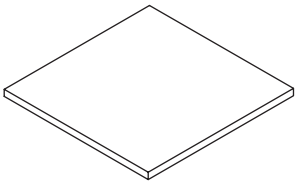 Removable Shelf 1	6 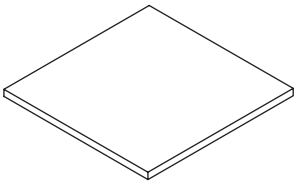 Removable Shelf 2	7 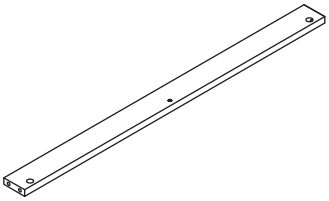 Top Back Rail	8 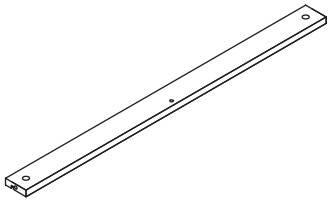 Top Front Rail
9 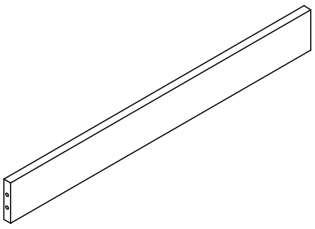 Top Back Rail 1	10 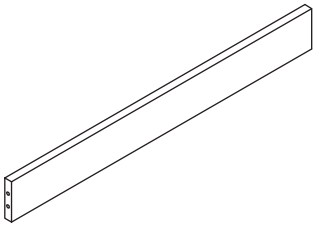 Center Back Rail	11 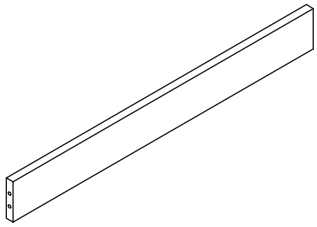 Bottom Back Rail	12 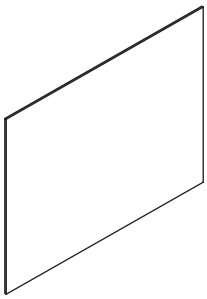 Back Panel
13 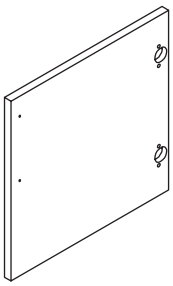 Left Door 1	14 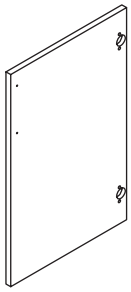 Left Door 2	15 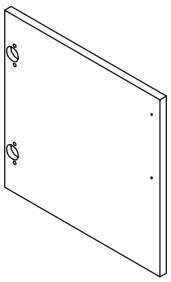 Right Door 1	16 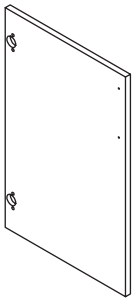 Right Door 2
17 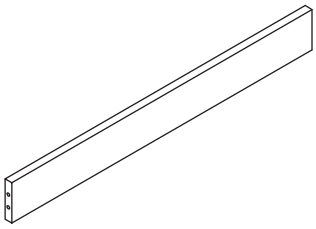 Toe Kick	18 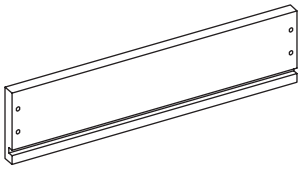 Drawer 1 Left Side	19 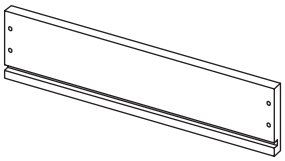 Drawer 1 Right Side	20 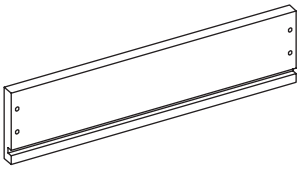 Drawer 2 Left Side

21 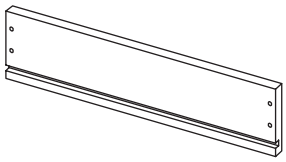 Drawer 2 Right Side	22 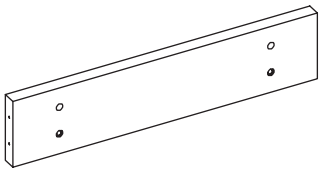 Drawer 1 Front	23 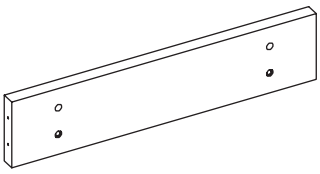 Drawer 2 Front	24 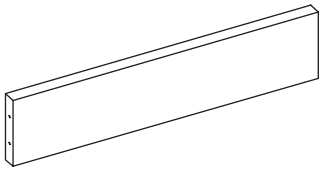 Drawer 1 Back
25 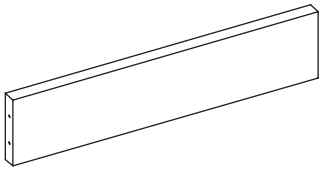 Drawer 2 Back	26 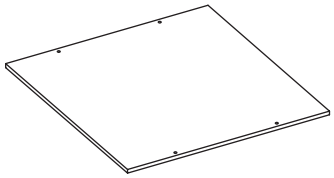 Drawer 1 Bottom	27 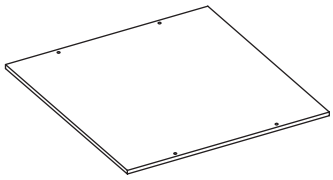 Drawer 2 Bottom	28 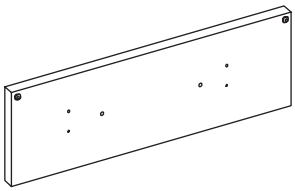 Drawer 1 Face
29 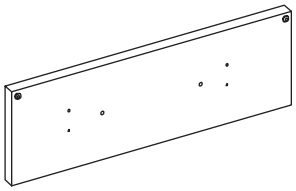 Drawer 2 Face	30 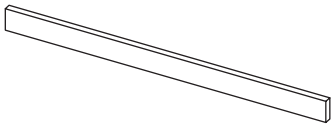 Top Filler	31 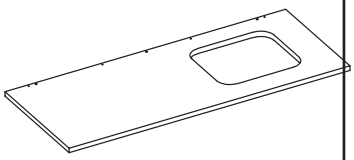 Right Cutout Top	

Hardware

A 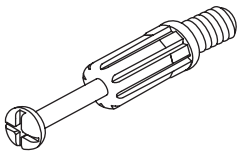 Cam Lock Bolts (x22)	**B** Cam Locks (x22)	**C** 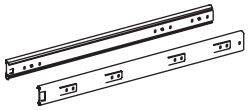 Ball Bearing Drawer Slides (x2)	**D** 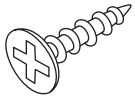 For Hinges Ø4x15 mm Wooden Screw (x56)
E 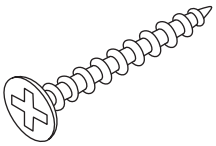 Ø4x28mm Wooden Screw (x4)	**F** 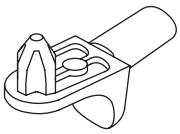 Shelf Support (x8)	**G** 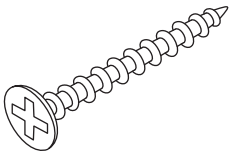 Ø4x30mm Wooden Screw (x16)	**H** 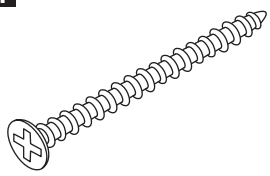 Ø4x40mm Wooden Screw (x22)
I 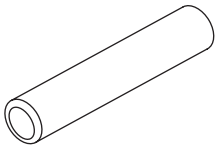 Wooden Dowel (x24)	**J** 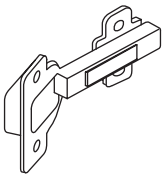 Hinge (x4)	**K** 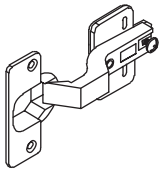 Hinge (x4)	**L** 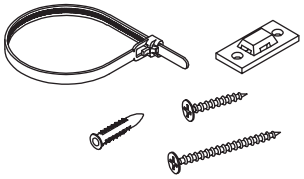 Antitip (x2)
M 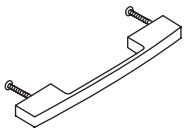 Drawer Handle (x2) Ø4x23.5mm Screw (x4)	**N** 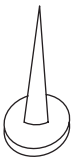 Plastic Nail (x10)	**O** Sticker 1 (x30)	**P** Sticker 2 (x24)
Q 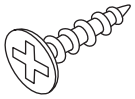 For Drawer Slides Ø3.5x15 mm Wooden Screw (x24)	**R** 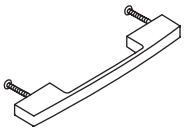 Door Handle (x4) Ø4x25mm Screw (x8)		

Tools Needed (But Not Included):

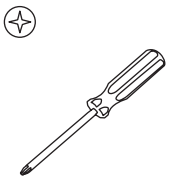 Phillips Head Screwdriver	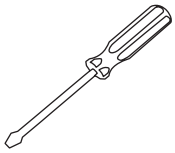 Flat Head Screwdriver	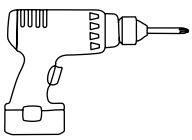 Electric Screwdriver	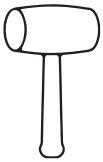 Rubber Mallet

Hardware Specifications:

- Ball Bearing Drawer Slides
- Ø4x15 mm Wooden Screw
- Ø4x28mm Wooden Screw
- Ø4x23.5mm Wooden Screw
- Ø4x25mm Wooden Screw
- Ø4x30mm Wooden Screw
- Ø4x40mm Wooden Screw
- Ø3.5x15mm Wooden Screw
- Ø15*13mm Cam Lock
- Ø8*35mm Cam Lock Bolt
- Ø8x40mm Wooden Dowel

Assembly Instructions

NOTE:

- Before starting, ensure you have an open, clean area to assemble your cabinet.
- Ensure you have all the necessary parts and hardware listed above.
- We highly recommend hiring a professional contractor to assemble and install your cabinet(s).
- The assembly of drawers and doors are interchangeable, depending on preference. Depending on the orientation, you will have to use a drill to drill the predrilled holes for the door handle.

Step 1:

A. Locate your Drawer 1 Left Side (18), Drawer 1 Right Side (19), Drawer 1 Front (22), and Drawer 1 Back (24).

B. Attach the Drawer 1 Left Side (18) to the Drawer 1 Front (22) using two Ø4x40mm Wooden Screws (H).

C. Repeat the above steps by connecting the Drawer 1 Left Side (18) to the Drawer 1 Back (24) and connecting the Drawer 1 Right Side (19) to the Drawer 1 Front (22) and Drawer 1 Back (24) using the Ø4x40mm Wooden Screws (H).

D. Fully tighten with a Philips head screwdriver.

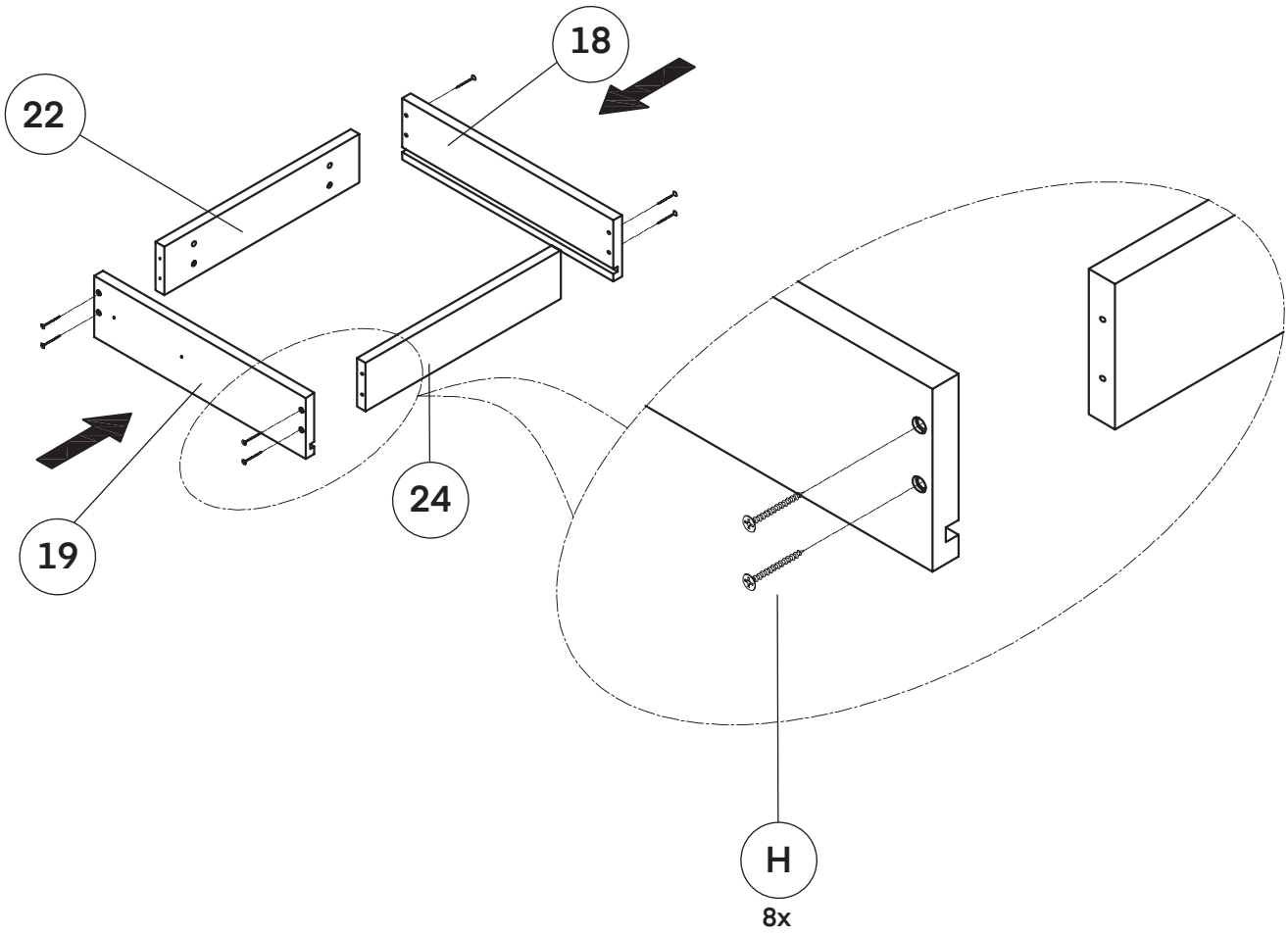

Step 2:

A. Locate the Drawer 1 Bottom (26) and slide it between the Drawer 1 Left Side (18) and Drawer 1 Right Side (19).

B. Secure it in place using four Ø4x30mm Wooden Screws (G) and tighten with a Philips head screwdriver.

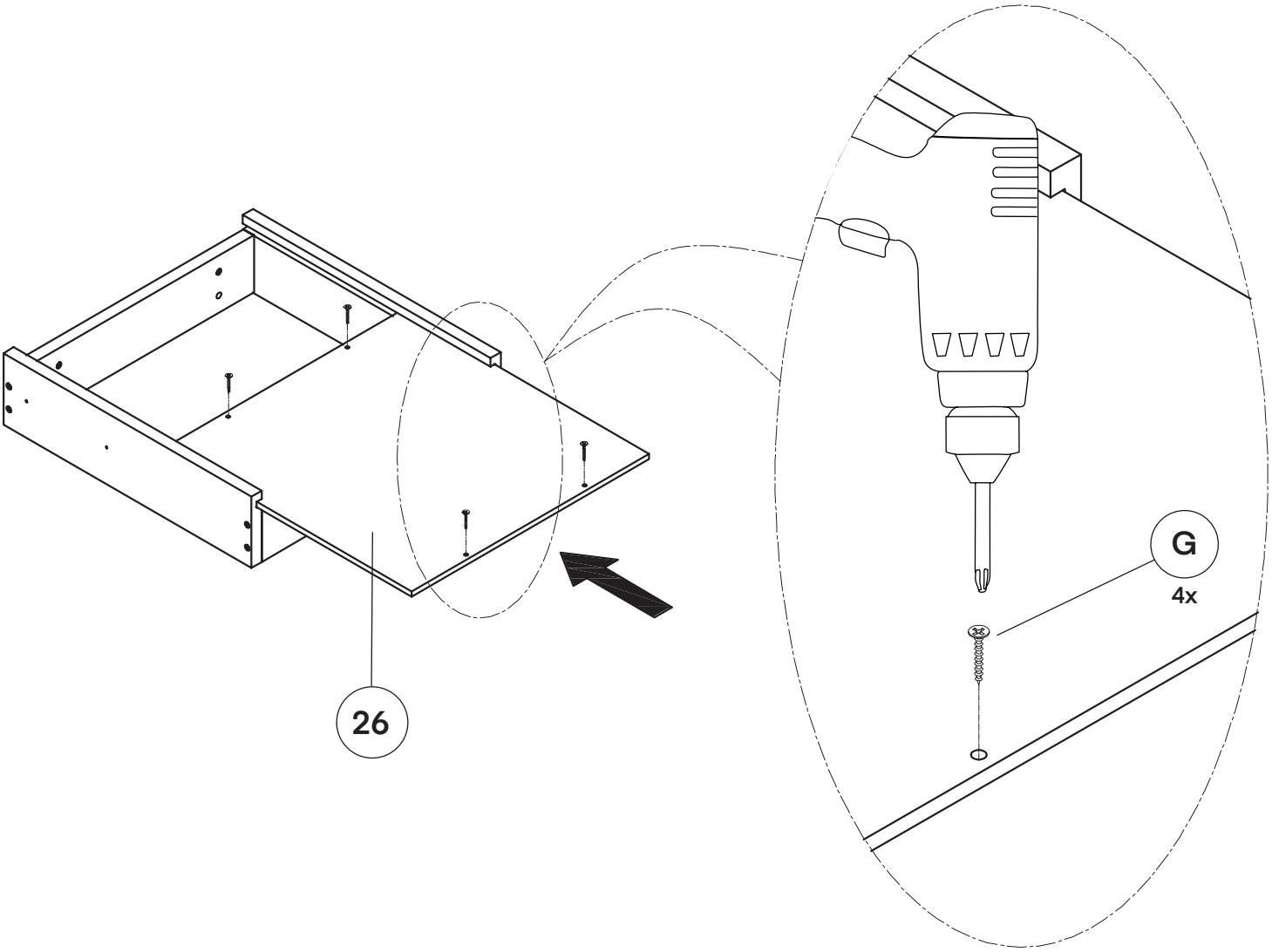

Step 3:

A. Locate the Drawer 1 Face (28) and remove the plastic film from the front of the panel before installing the Handle (M).

B. Take the Handle (M) and adhere it to the Drawer 1 Face (28) with the included screws.

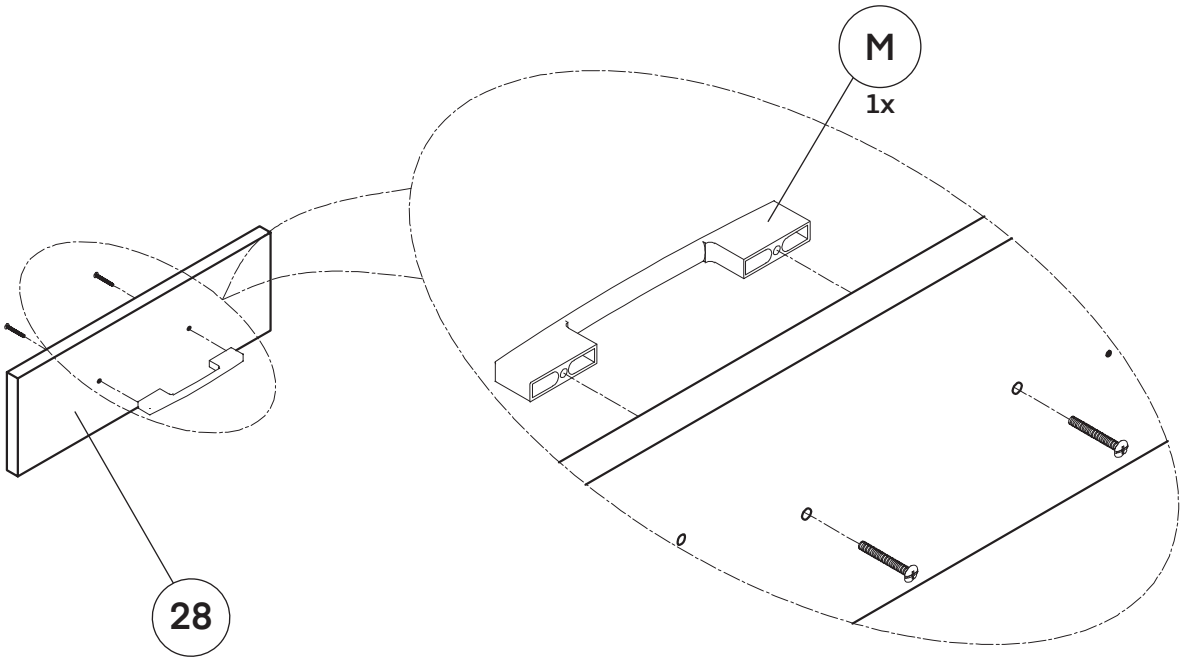

Step 4:

A. Locate the Ball Bearing Drawer Slides (C), separate each one by fully extending it out, and push the black pin down while pulling the slide out.

B. Secure half of the Ball Bearing Drawer Slide (C) to the side of the drawer, as pictured.

a. Repeat this for the other side of the drawer.

C. Using three Ø3.5x15mm Wooden Screws (Q) per Ball Bearing Drawer Slides (C), secure them in place with a Philips head screwdriver.

D. Affix the Drawer 1 Face (28) to the Drawer 1 Front (22) with two Ø4x28mm Wooden Screws (E).

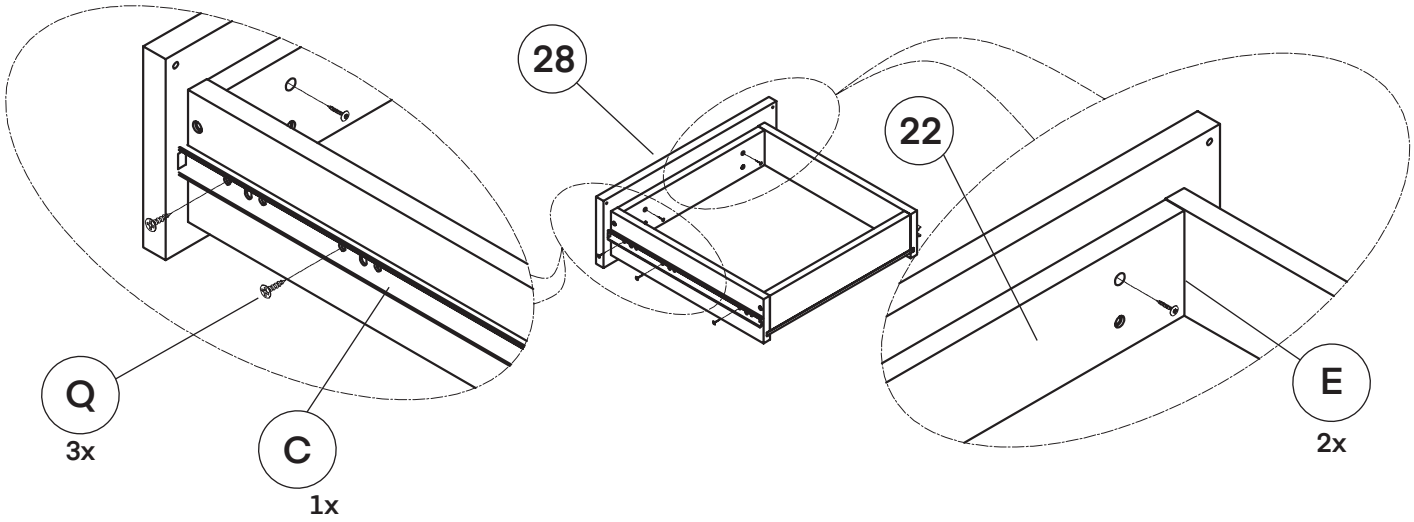

Step 5:

A. To assemble the second drawer, locate the following pieces: Drawer 2 Left Side (20), Drawer 2 Right Side (21), Drawer 2 Front (23), Drawer 2 Back (25), Drawer 2 Bottom (27), Drawer 2 Face (29), eight Ø4x40mm Wooden Screws (H).

B. Connect the Drawer 2 Front (23) and the Drawer 2 Back (25) to the Drawer 2 Left Side (20) with Ø4x40mm Wooden Screws (H) and secure it in place with a Philips head screwdriver.

C. Affix the Drawer 2 Right Side (21) to the Drawer 2 Back (25) and the Drawer 2 Front (23) with Ø4x40mm Wooden Screws (H) and secure it in place with a Philips head screwdriver.

D. Locate the Drawer 2 Bottom (27) and slide it between the Drawer 2 Left Side (20) and Drawer 2 Right Side (21).

E. Secure it in place using Ø4x30mm Wooden Screws (G) and an electric screwdriver.

F. Locate the Drawer 2 Face (29) and remove the plastic film from the front of the panel before installing the Handle (M).

a. Adhere the Handle (M) to the Drawer 2 Face (29) with the accompanying screws.

G. Locate the Ball Bearing Drawer Slides (C) and secure one on each side of the drawer, as pictured.

H. Using three Ø3.5x15mm Wooden Screws (Q) per Ball Bearing Drawer Slides (C), secure them in place with a Philips head screwdriver.

I. Affix the Drawer 2 Face (29) to the Drawer 2 Front (23) with two Ø4x28mm Wooden Screws (E) on the top.

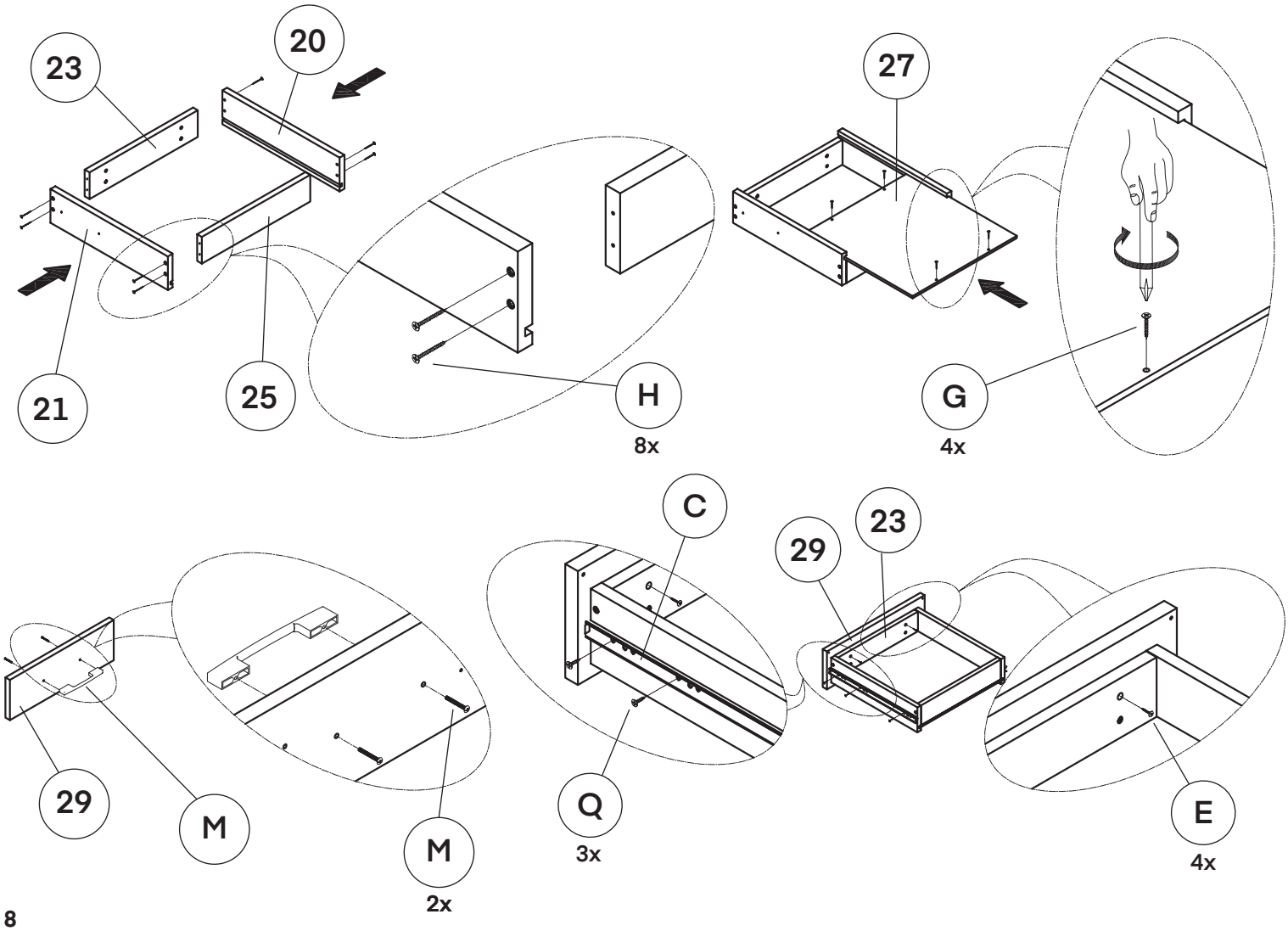

Step 6:

A. Locate the Bottom Panel (4) and lay it on a flat, clean surface.

B. In the Bottom Panel (4), locate the four middle, pre-drilled holes.

a. Insert two Wooden Dowels (I), as pictured, in the two middle holes in the Middle Panel (3).

b. Lightly tap them in place with a rubber mallet.

c. Insert two Cam Lock Bolts (A) into the holes outside in the Bottom Panel (4).

d. Secure them in place with a Philips head screwdriver.

C. Take the Middle Panel (3) and secure it on top of the hardware you just installed.

a. Push down until it is flush with the Bottom Panel (4).

b. Adhere two Cam Locks to the bottom of the Middle Panel (3), as pictured, and turn them clockwise to secure in place.

D. Locate the Top Front Rail (6) and the Top Back Rail (7).

E. Affix them to the Middle Panel (3) using three Ø4x40 mm Wooden Screws (H) with a Philips head screwdriver, as pictured.

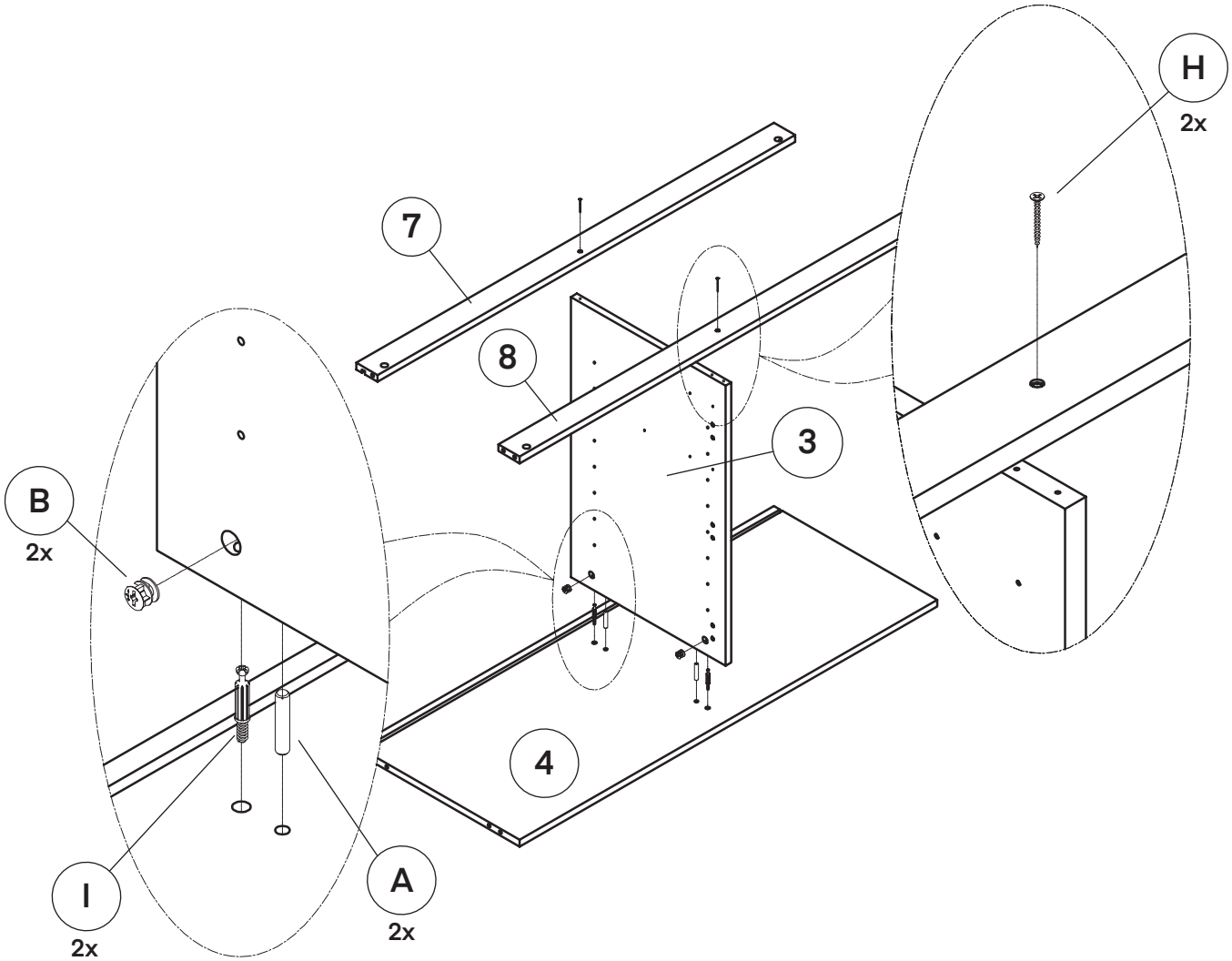

Step 7:

A. Locate the Left Side Panel (1) and lay it on a flat, clean surface.

B. Insert seven Wooden Dowels (I) and eight Cam Lock Bolts (A) along three of the edges on the Left Side Panel (1), as pictured.

C. Turn the assembled structure from Step 6, onto its side and affix it to the hardware you installed, as shown.

D. Attach the Top Back Rail 1 (9) and Center Back Rail (10) to the side of the Left Side Panel (1) with the etched groove.

E. Put four Wooden Dowels (I) into the bottom of the Bottom Panel (4) and then attach the Toe Kick (17) and Bottom Back Rail (11) to it, as shown.

F. Insert eight Cam Locks (B) where you installed all the Cam Lock Bolts (A) and turn them clockwise to secure.

G. Install eight Wooden Dowels (I) into each pair of holes on all the edges of the panels you just installed.

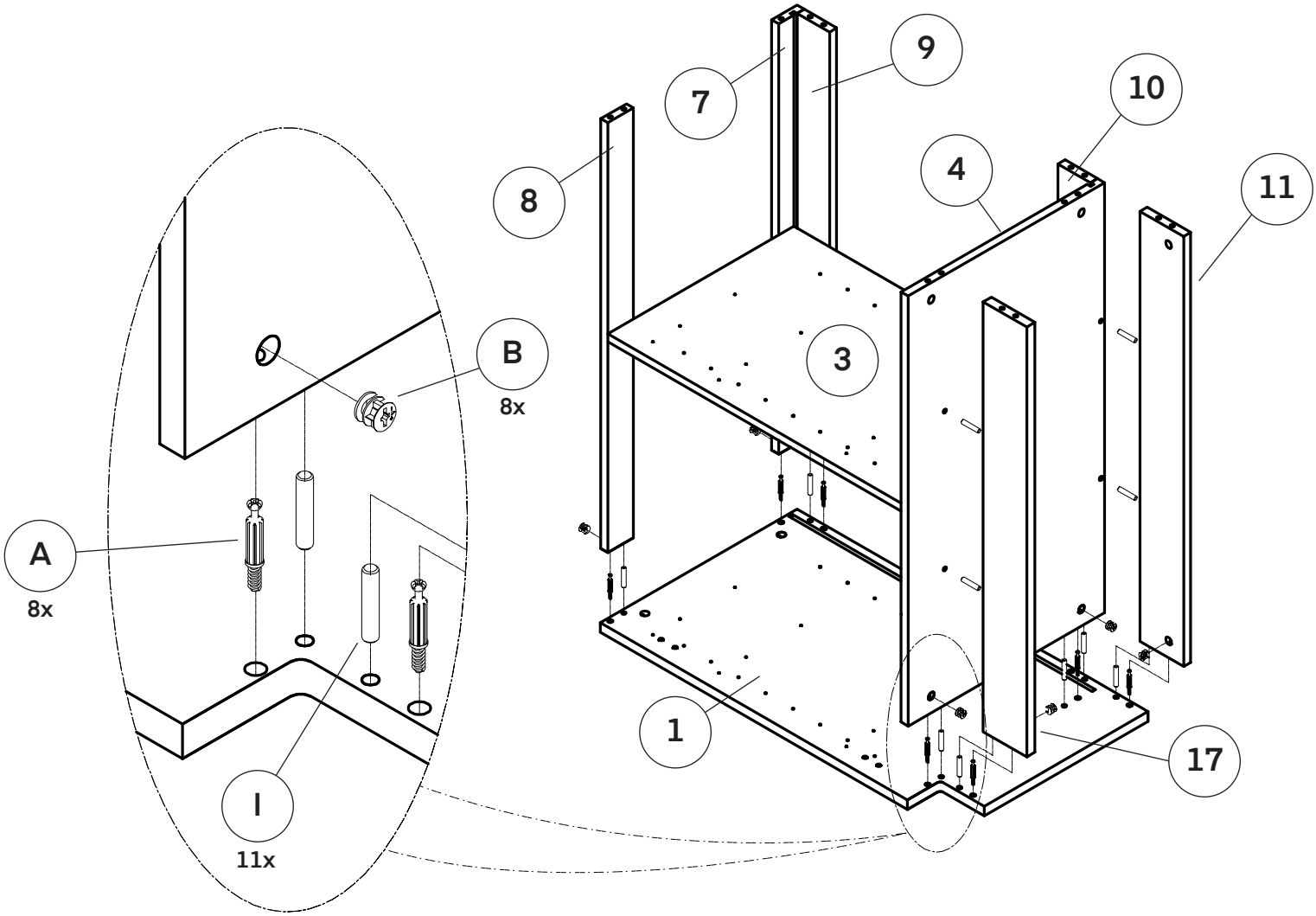

Step 8:

A. Slide the Back Panel (12) in between the crevices on the Top Back Rail 1 (9) and Bottom Panel (4).

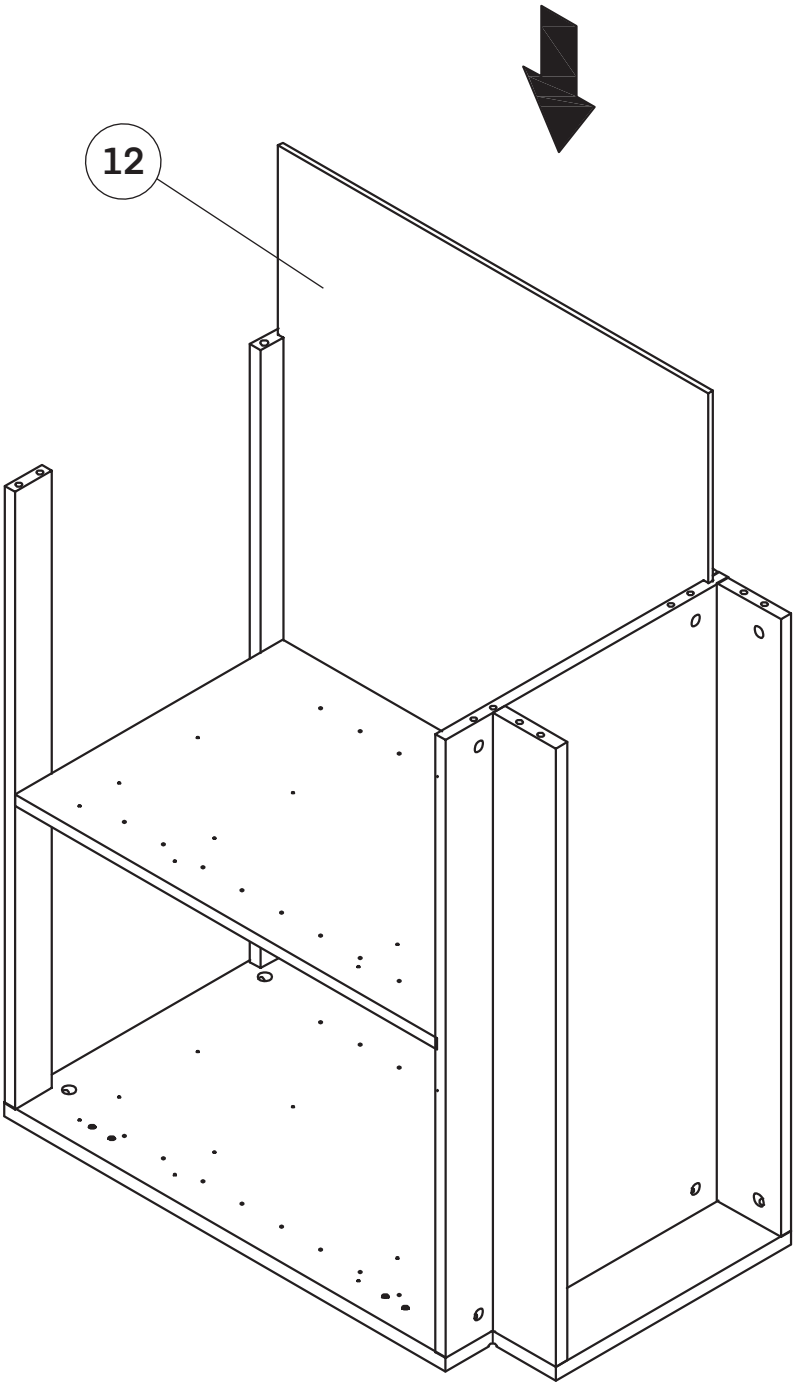

Step 9:

A. Insert Cam Lock Bolt's (A) into the applicable holes on the Right Side Panel (2), as pictured.

B. The Cam Lock Bolt's (A) should be in the opposite hole of where the Wooden Dowels (I) will go when you insert the Right Side Panel (2).

C. Locate the Right Side Panel (2) and place it on top of all the hardware you just installed in Step 7.

D. Lightly tap into place with a rubber mallet until flush with the other panels.

E. Insert and secure Cam Locks (B) into the accompanying holes for the Cam Lock Bolts (A).

F. Insert ten Plastic Nails (N) into the bottom of the Left Side Panel (1), the Right Side Panel (2), the Bottom Back Rail (11), and the Toe Kick (17) by tapping them in with a rubber mallet.

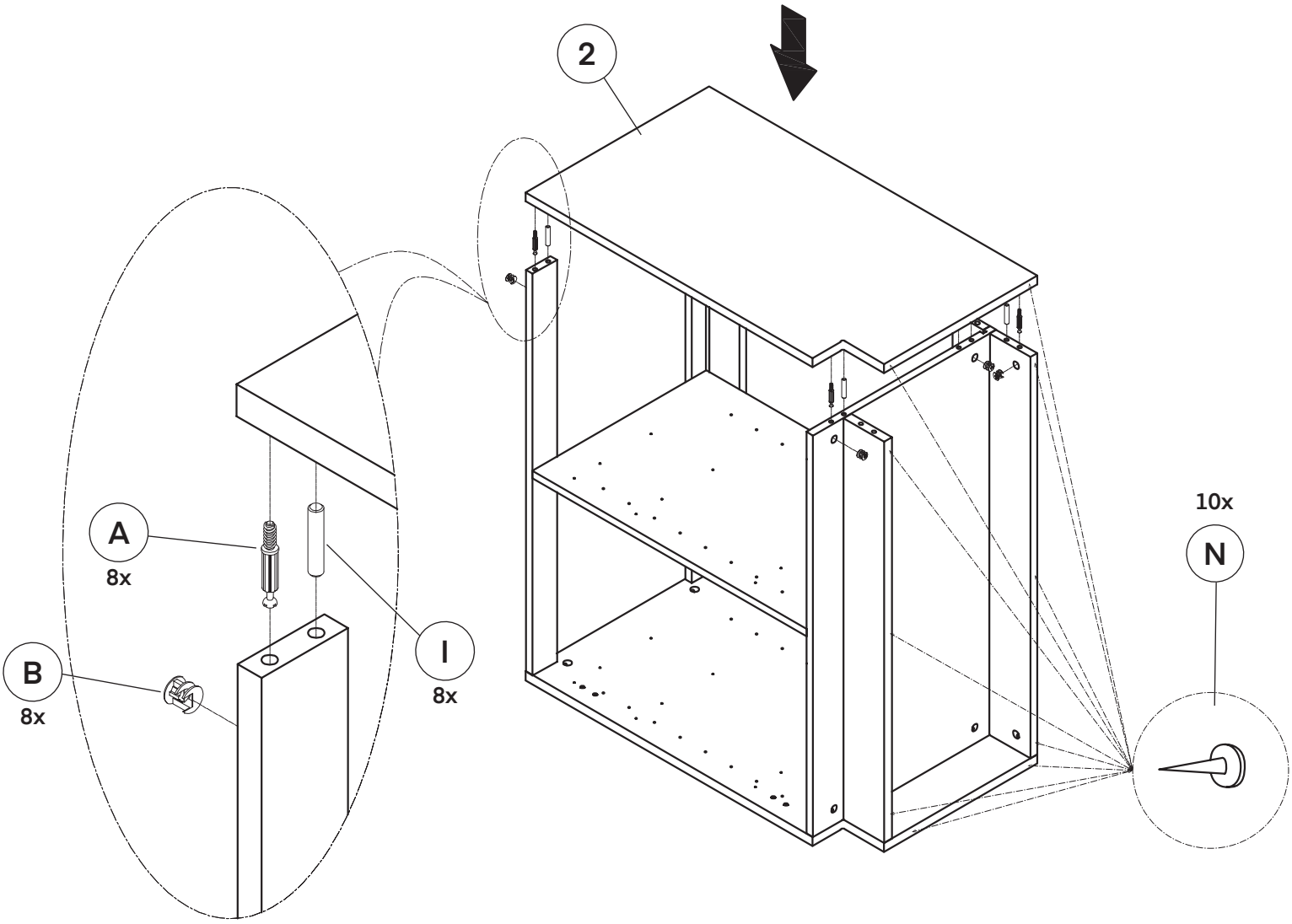

Step 10:

A. Locate the Left Door 1 (13), Right Door 2 (16), four Hinges (K), eight Ø4x15mm Wooden Screws (D) and two Handles (M); lay it on a flat, clean surface.

B. Affix the two Hinges (K) in place with eight Ø4x15mm Wooden Screws (D) and a Philips head screwdriver.

C. Remove the plastic film from the front of the door before proceeding.

D. Drill through the two holes for the Handle (M) on the door before installing the Handle (M).

a. Attach the Handle (R) with the accompanying screws and a Philips head screwdriver.

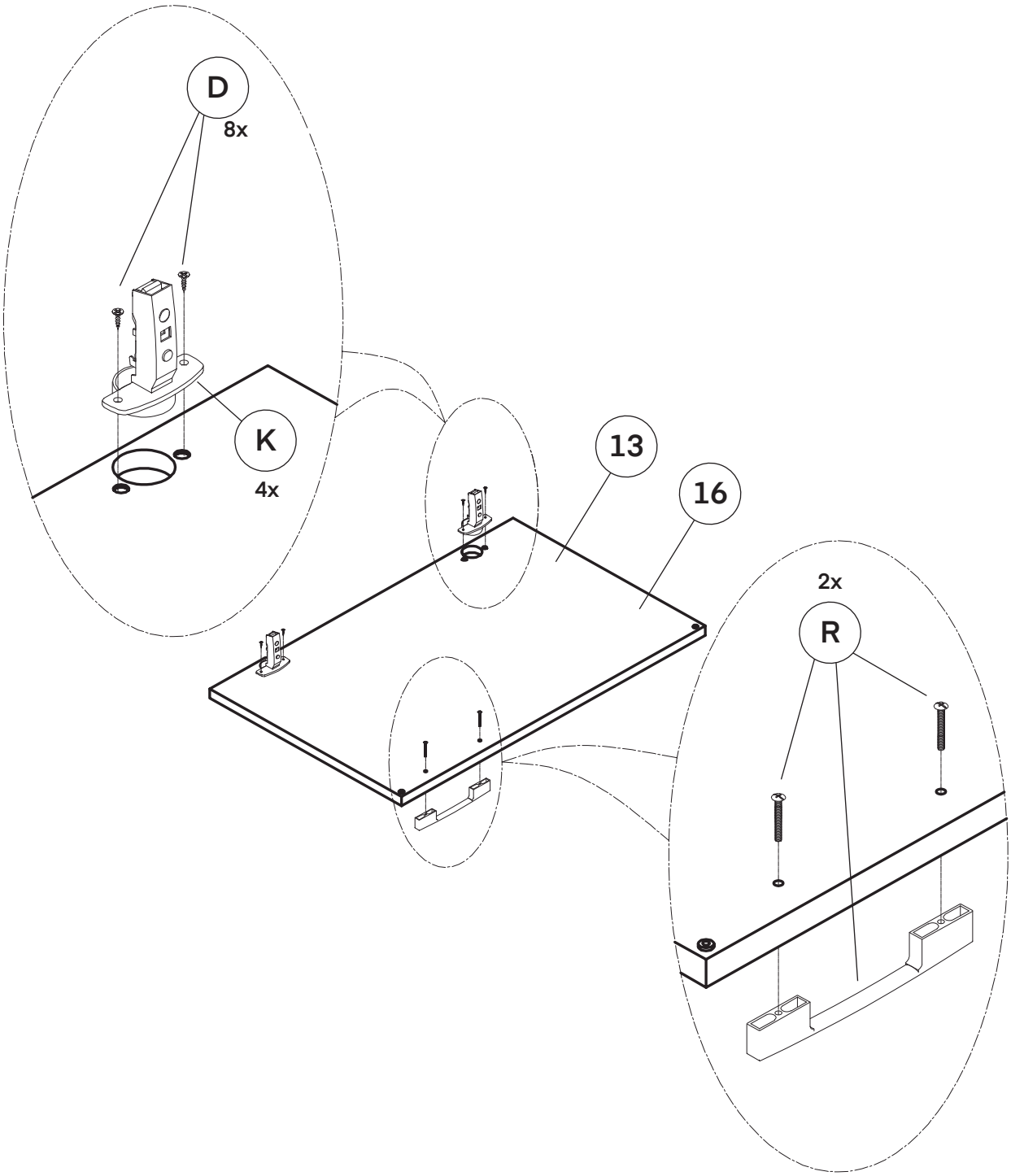

Step 11:

A. Locate the Right Door 1 (15), Left Door 2 (14), four Hinges (J), eight Ø4x15mm Wooden Screws (D) and two Handles (M); lay it on a flat, clean surface.

B. Affix the four Hinges (J) in place with eight Ø4x15mm Wooden Screws (D) and a Philips head screwdriver.

C. Remove the plastic film from the front of the door before proceeding.

D. Drill through the two holes for the Handle (M) on the door before installing the Handle (M).

a. Attach the Handle (R) with the accompanying screws and a Philips head screwdriver.

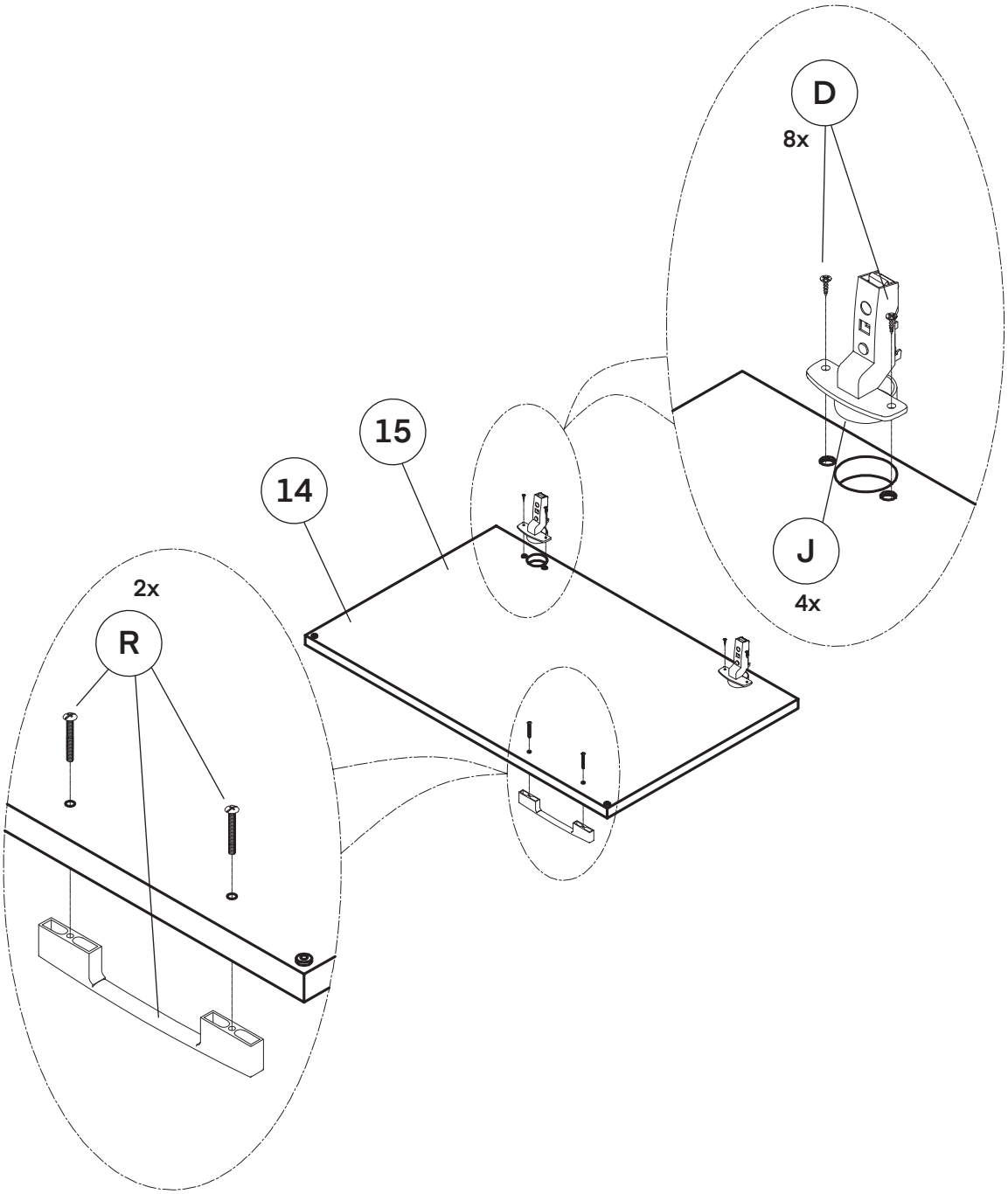

Step 12:

A. Lay the Right Cutout Top (31) on a flat, clean surface.

B. Adhere the Top Filler (30) on top of the Wooden Dowels (I) and gently tap until flush.

C. Insert four Ø4x40mm Wooden Screws (H) from underneath the Right Cutout Top (31) through the Top Filler (30).

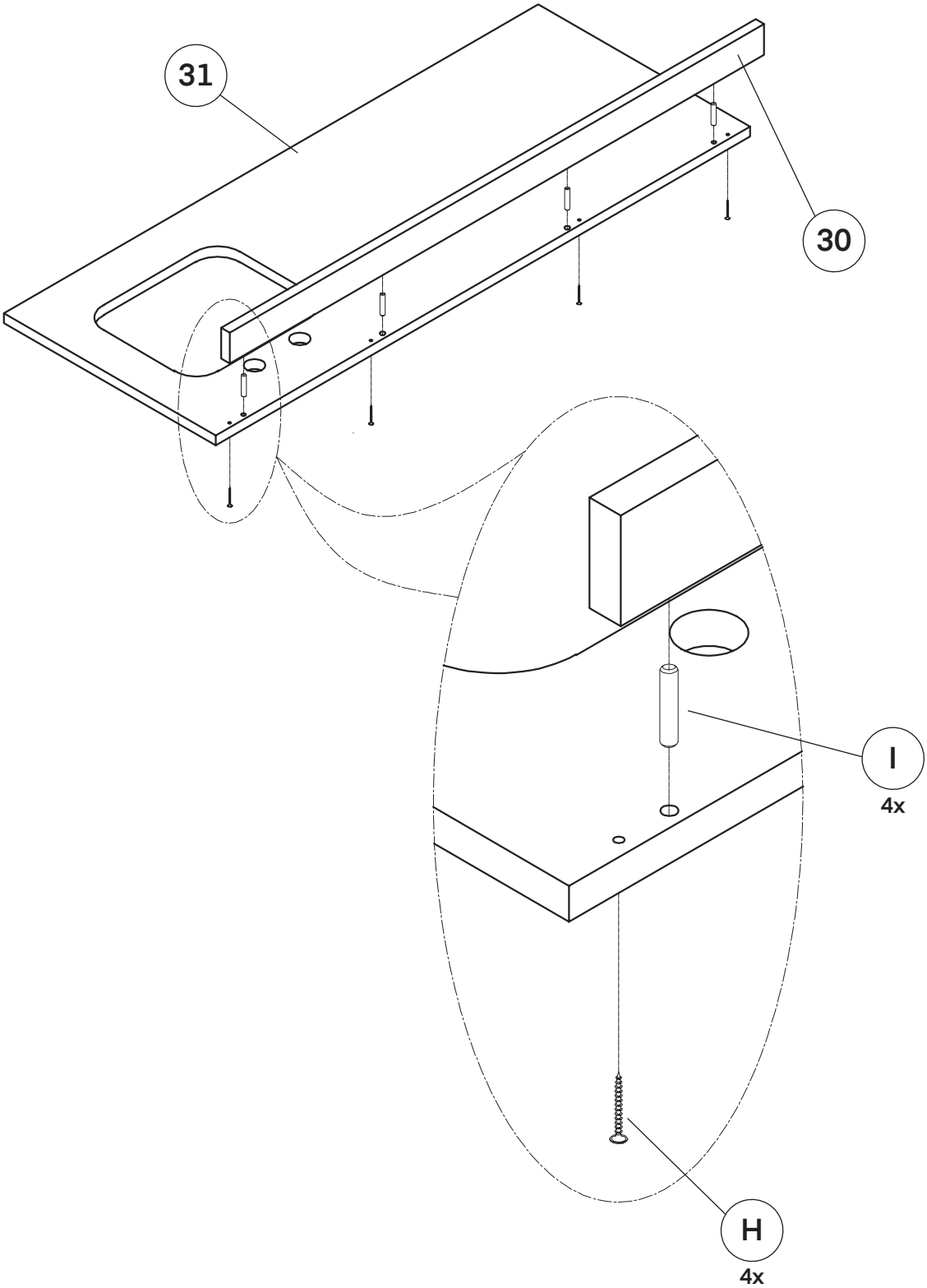

Step 13:

A. Turn your cabinet so that it's resting on the bottom.

B. Insert both sets of Ball Bearing Drawer Slides (C) on the inside of the Right Side Panel (2) and the right side of the Middle Panel (3) with three Ø3.5x15mm Wooden Screws (Q) per Ball Bearing Drawer Slides (C).

a. Ensure you put the screws into the first hole per pair.

C. Insert two Hinges (J) on the inside of the Left Side Panel (1) using four Ø4x15mm Wooden Screws (D), as pictured.

D. Insert two Hinges (J) on the inside of the Right Side Panel (2) using four Ø4x15mm Wooden Screws (D), as pictured.

E. Insert four Hinges (K) on both sides of the Middle Side Panel (3) using eight Ø4x15mm Wooden Screws

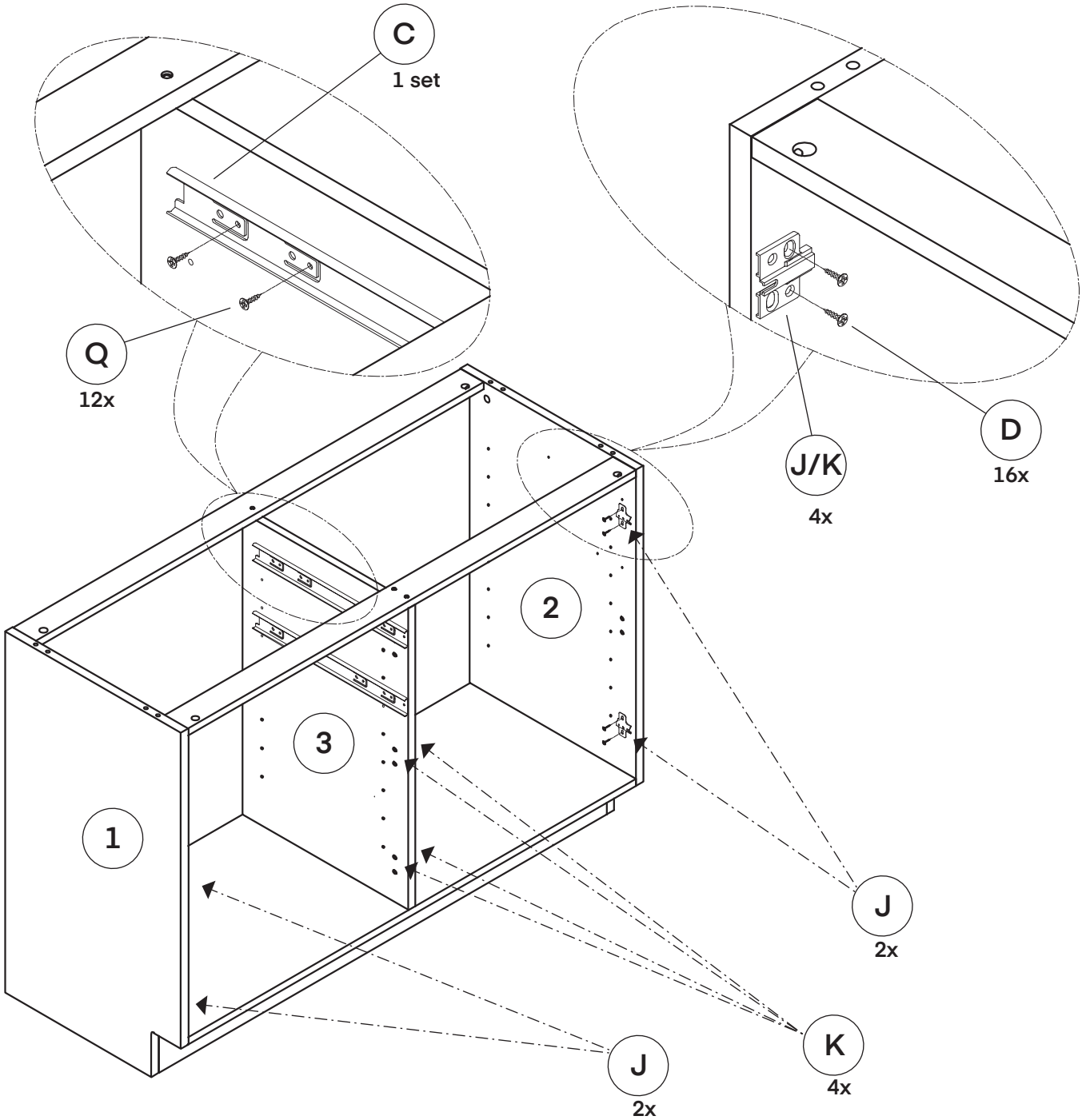

Step 14:

A. Insert two Wooden Dowels (I) in the middle holes located on the Left Side Panel (1) and the Right Side Panel (2) by lightly tapping them using a rubber mallet.

B. Insert four Cam Lock Bolts (A) into the Right Cutout Top (31).

C. Place the Right Cutout Top (31) on top of the installed hardware.

D. Insert four Cam Locks Bolts (B) into the accompanying holes located on the side panels.

E. Install the Shelf Supports (F) where you want, and then place both Removable Shelve 1 (5), and Removable Shelf 2 (6) on top of the Shelf Supports (F).

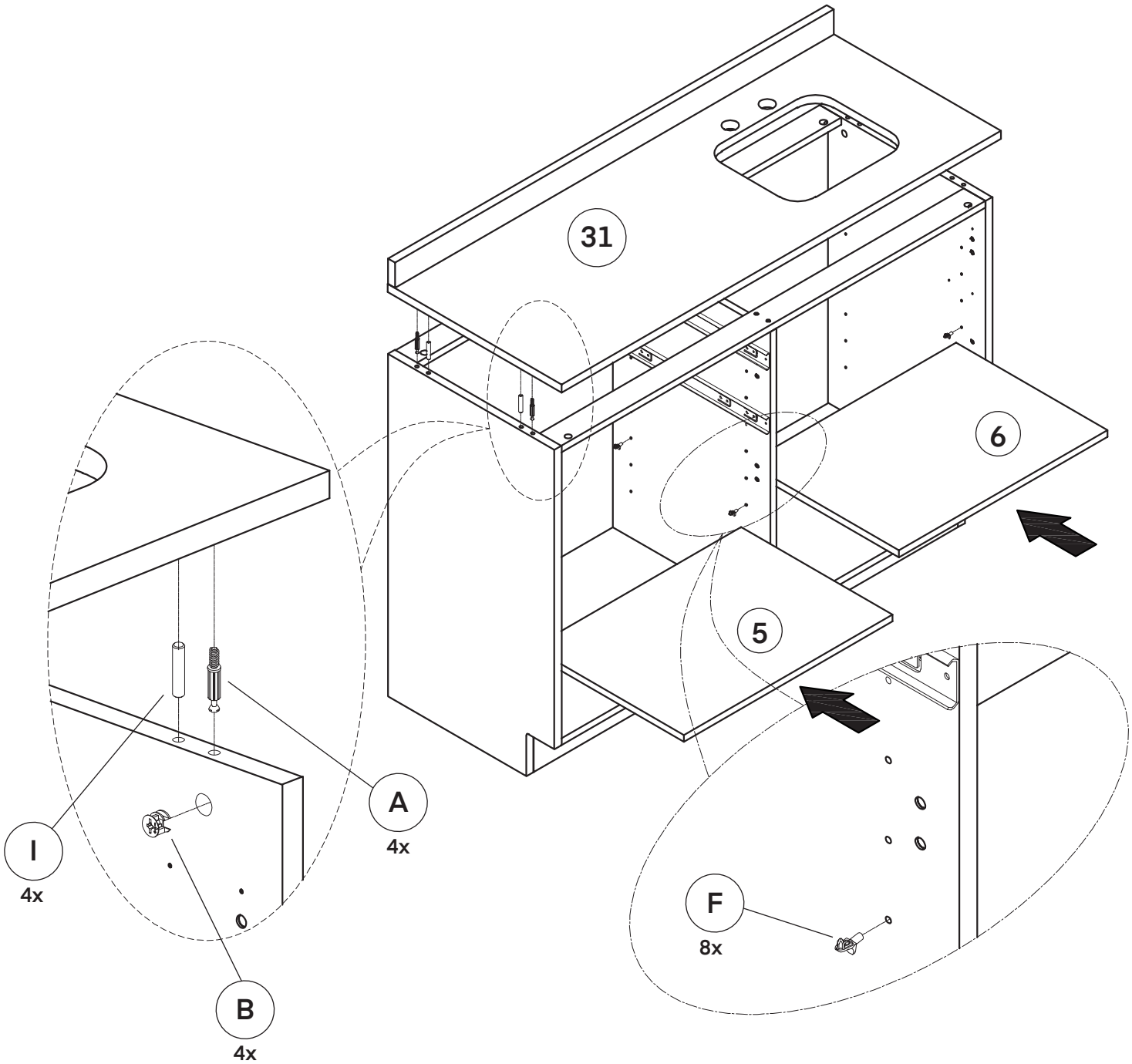

Step 15:

A. Attach the assembled left and right doors to the Hinges (J)/(K) by pushing the Hinge (J)/(K) on the door into its accompanying piece in the cabinet until it clicks into place.

B. Insert the assembled drawers by sliding them onto the sliders.

a. Should the drawers not fit properly, adjust them by doing the following:

i. Loosen the Ø4x28mm Wooden Screws (E) on the Drawer 1 Face (28) and Drawer 2 Face (29).

ii. Move the drawer's face up, down, left, and right until it fits.

iii. Tighten the Ø4x28mm Wooden Screws (E).

iv. Insert and tighten the Ø4x30mm Wooden Screws (G).

C. Use Sticker's 1 (O) to cover the Ø4x30mm Wooden Screws (G) and Ø4x40mm Wooden Screws (H) on the drawers.

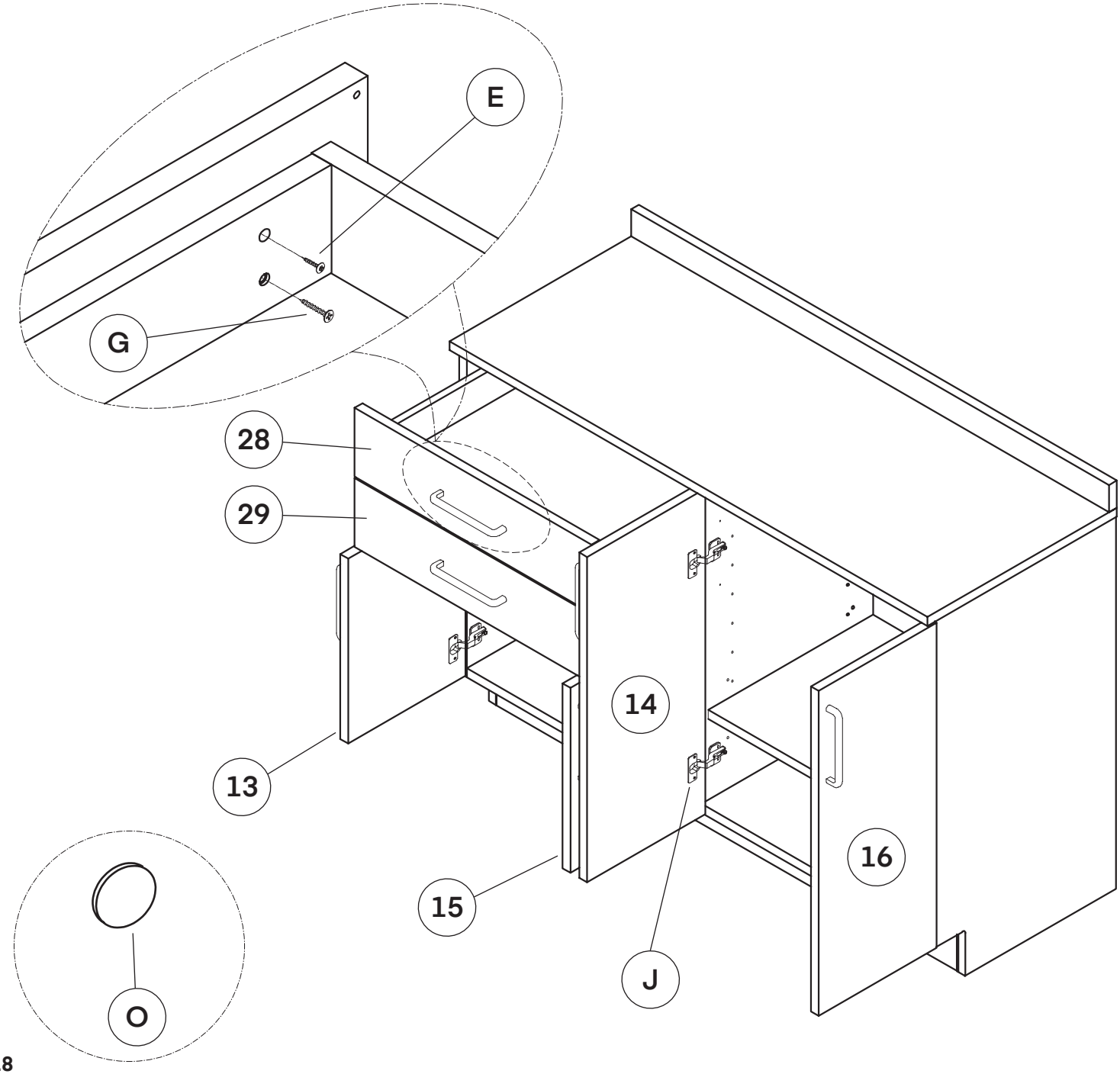

Step 16:

A. If the door isn't lining up, adjust the screw on the Hinges (J)/(K) by loosening or tightening it until the door sits straight.

B. Should you choose to anchor your cabinet to the wall, we've included Antitip (L) for you, but it is not required.

C. Add Sticker's 1 (O) and Sticker's 2 (P) to cover the Cam Locks (B) and any unused holes inside your cabinet.

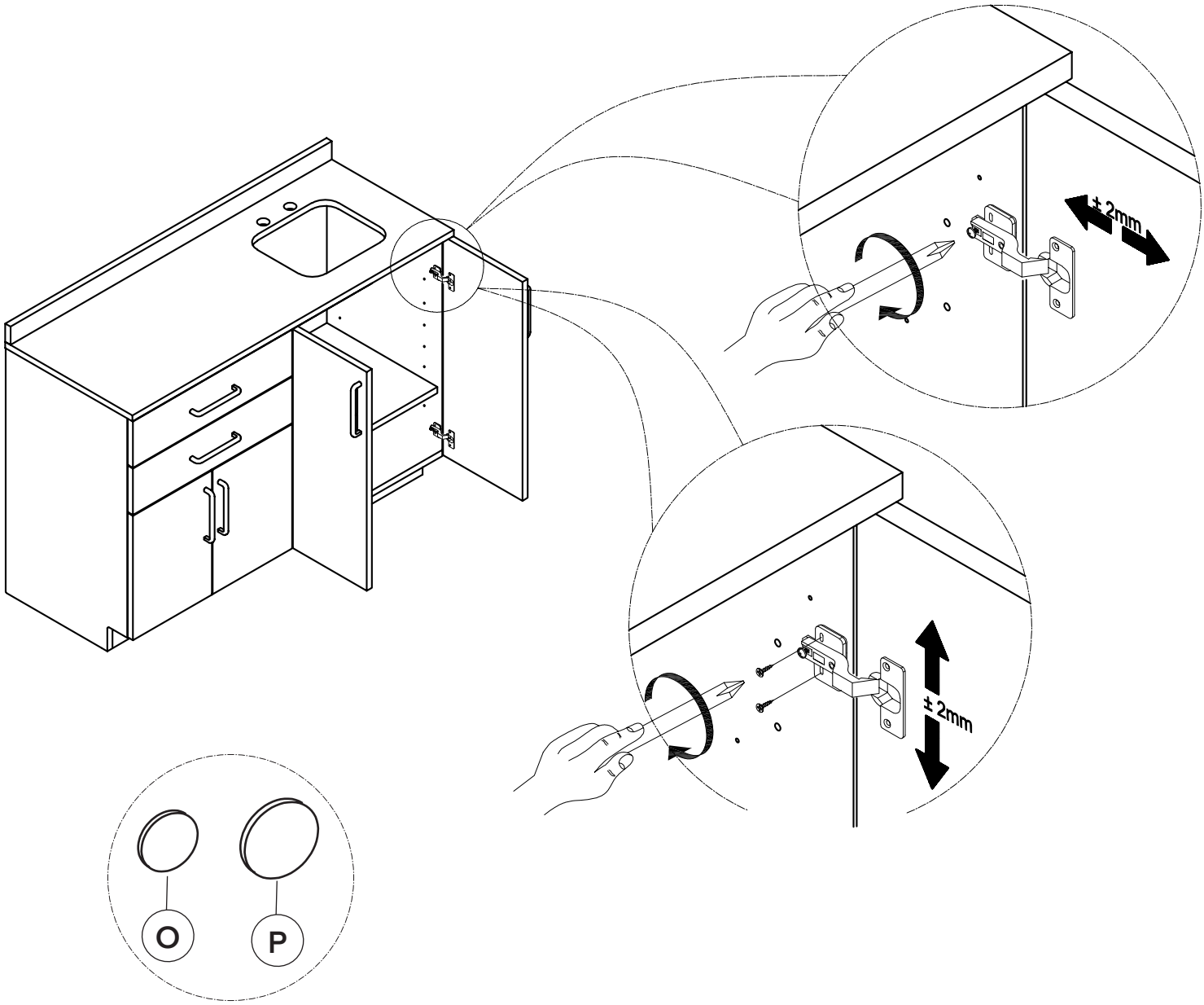

Medical Sink with Faucet and Handles Installation

Parts:

A	B
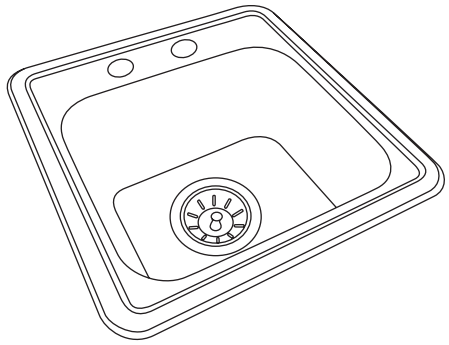 Medical Sink	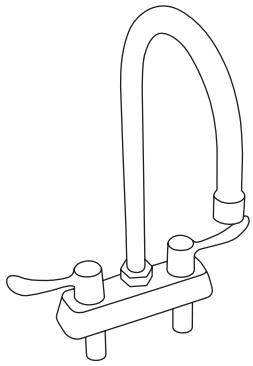 Faucet and Handles

Hardware:

1	2	3	4
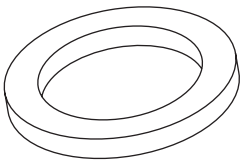 Rubber Washer (x2)	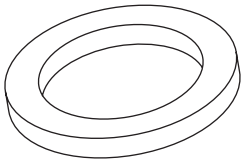 Metal Washer (x2)	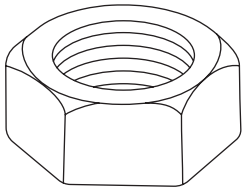 Hex Nut (x2)	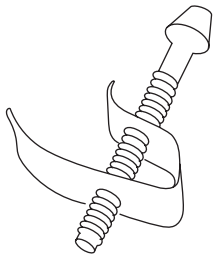 Sink Clips (x8)
5	**6**	**7**	**8**
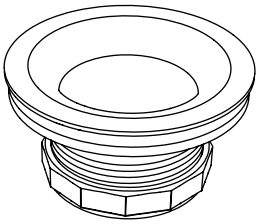 Plastic Drainer	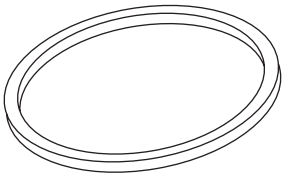 Rubber Washer (Drainer)	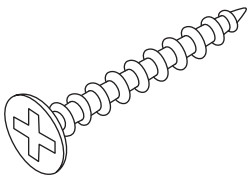 M6 x 20mm Screw	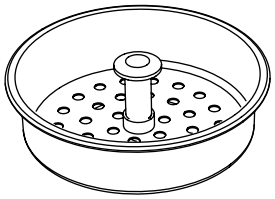 Metal Drainer

Tools Needed (But Not Included):

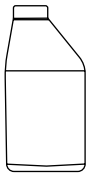 Latex or 100% Silicone Caulk	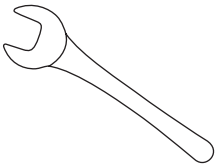 Hex Nut Wrench	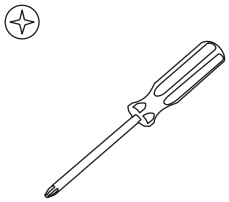 Phillips Head Screwdriver

NOTE:
We highly recommend using two people to install your Medical Sink.

Step 1:

A. Before installing your Medical Sink (A), apply a bead of caulk around the edge of the cutout.

B. Line up and insert the Medical Sink (A) into the cutout and apply even pressure from both sides.

C. Grab your Sink Clips (4) and partially thread the included screws into each clip.

D. Under the sink, you will see mounting rails; slide your Sink Clips (4) in between the rails.

- **a.** The clips need to be evenly placed around the entire bottom of the sink.
- **b.** There should be two on each side, two on the back and two on the front.

E. Slowly start securing every other clip, working in a clockwise formation, and tighten the screws until the Medical Sink (A) is drawn down to the countertop.

- **a.** All clips should be secured in place.
- **b.** Do not over-tighten them.
- **c.** Wipe off any excess adhesive from the top of the sink.

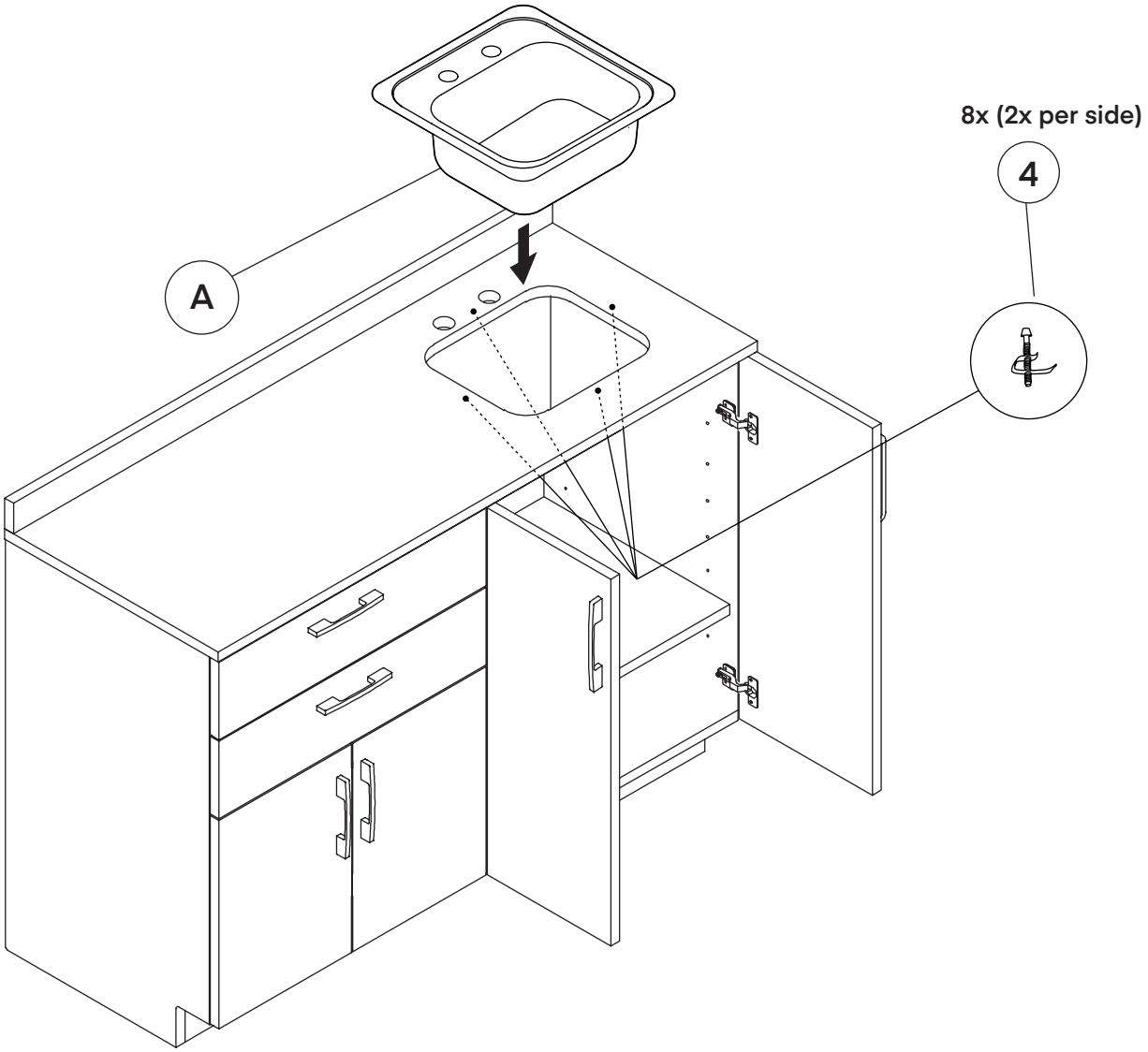

Step 2:

A. Locate your Faucet and Handles (B) and remove the following hardware on the bottom of the handles.

a. Two Rubber Washers (1).

b. Two Metal Washers (2).

c. Two Hex Nuts (3).

B. Place the Faucet and Handles (B) into the holes on top of the sink.

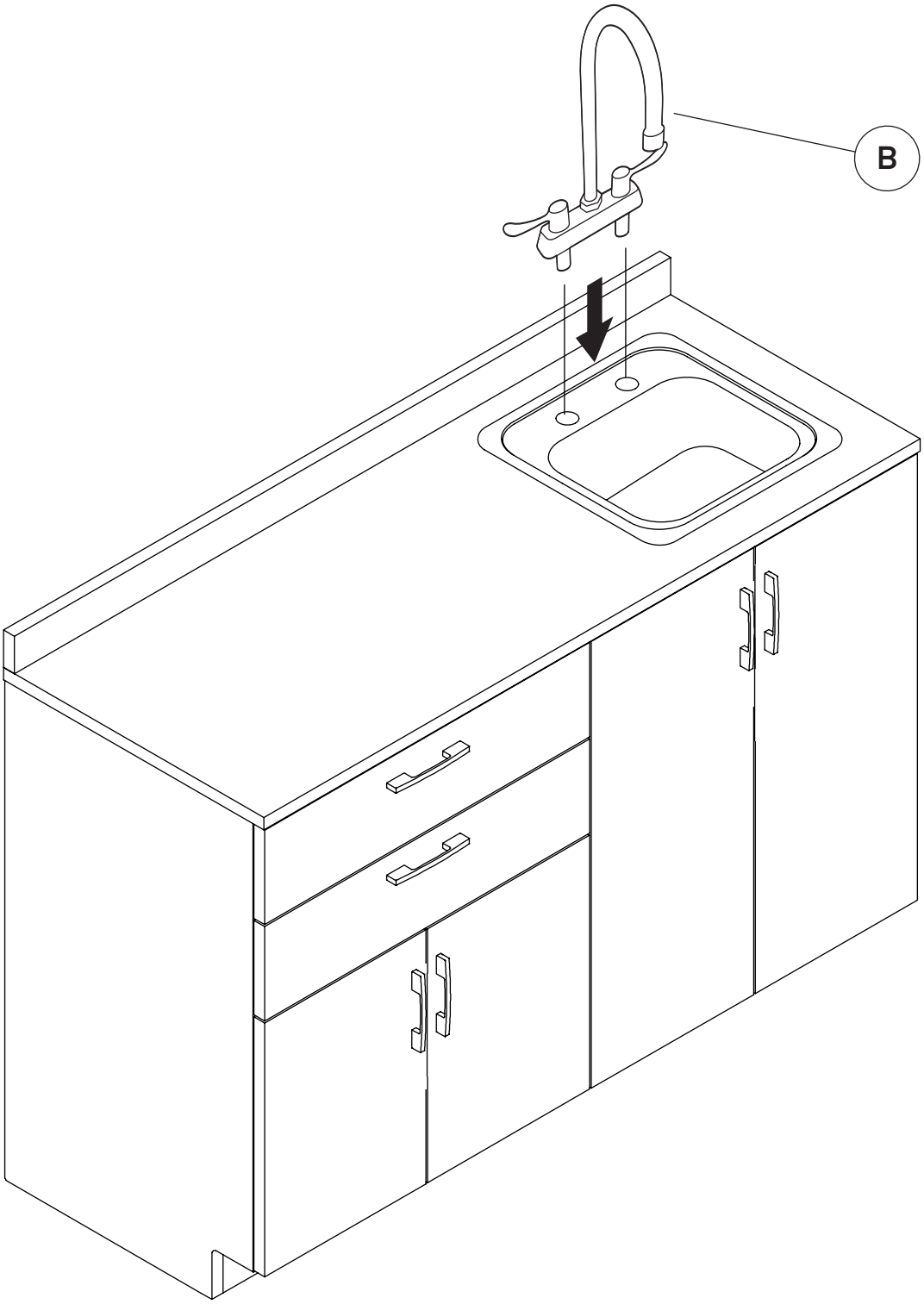

Step 3:

A. Open your cabinet door on your base cabinet and go under the countertop.

B. Secure a Rubber Washer (1) to one of the metal threads that connect to the handles.

C. Then secure a Metal Washer (2) and the Hex Nut (3).

a. For the Hex Nut (3), do not fully tighten just yet.

D. Repeat the above steps for the other handle.

E. Once all the hardware is on, firmly secure the Hex Nuts (3).

F. Locate your included drainer and unscrew the included M6 x 20 mm Screw (7) from it.

a. You should have the Plastic Drainer (5), a Rubber Washer (6), an M6 x 20 mm Screw (7), and a Metal Drainer (8).

G. Place the Rubber Washer (6) over the hole in your sink.

H. Next, place the Metal Drainer (8) on top of the Rubber Washer (6).

I. Place the Plastic Drainer (5) underneath the sink to match up with the hole.

a. Insert the M6 x 20 mm Screw (7) through the top of the Metal Drainer (8) and into the Plastic Drainer (5).

b. Secure the screw in place with a Philips head screwdriver.

J. Your Medical Sink (A) is now ready for plumbing to be installed.

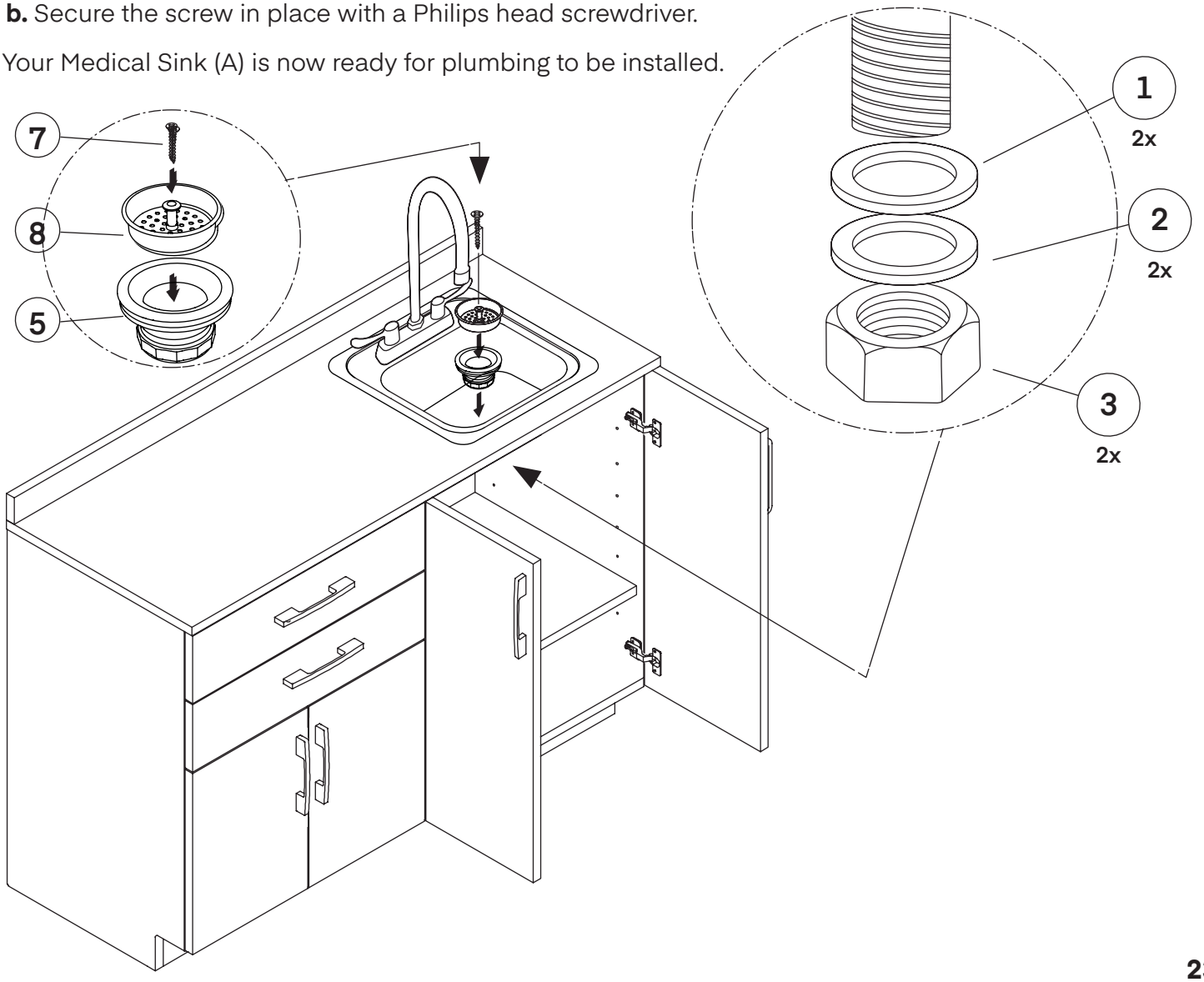

Warranty

1. Viva Comfort (the "Company" or "Tiger Companies") warrants to the purchaser that the product will be free from defects in workmanship and materials for a period of 3 years from the date of purchase. The warranty period is not extended if we repair, replace, exchange, or provide a refund for the product (as determined in our sole discretion). We may change the availability of this limited warranty at our discretion, but any changes will not be retroactive.
2. These warranties are not assignable or transferable to any other person, including, without limitation, any subsequent owner or other transferee of the product.
3. This Warranty does not apply to: (a) damage caused by misuse, tampering, abuse, neglect, or accident; (b) damage caused by improper installation, modification, or service; (c) alteration of the serial number; or (d) use that violates the instructions furnished by the Company will void this warranty.
4. The sole responsibility of the Company shall be limited to (a) the repair or replacement (in its sole discretion) of any component of the product which fails to conform to this; (b) a refund the purchase price of such product (in its sole discretion), at no cost to the purchaser for the period of the warranty, or (c) an exchange for a similar product, comparable in function and price.
5. Contact the Company directly at 1-(800)-805-1790 to obtain service under this warranty. If it becomes applicable to send a defective product to the Company, a Return Authorization Number must first be obtained from the Company. In order to obtain service under this warranty, purchaser may be required to provide the Company with the following items (a) proof of purchase, (b) photographs and or videos (of the damage, and (c) a written testimonial describing the defect.
6. Products shipped without prior Return Authorization and Return Authorization Number may not be accepted, and the Company will not be responsible for their disposition and/or cost of return to the owner.
7. The Company will not assume any responsibility for any loss or damage incurred in shipping and or delivery.
8. The product(s) must be returned within 14 calendar days of receiving the return authorization from the Company and must include the original proof of purchase for the warranty to be honored.
9. Any implied warranties that the purchaser may have are limited to the duration of the warranties described above. There are no further warranties that extend or apply beyond the face hereof, and the Company expressly disclaims and excludes any and all warranties of merchantability or fitness for a particular purpose. Some states do not allow limitations on how long an implied warranty lasts, so the above limitation may not apply to you.
10. THE REMEDIES DESCRIBED ABOVE ARE YOUR SOLE AND EXCLUSIVE REMEDIES AND THE COMPANY'S ENTIRE LIABILITY FOR ANY BREACH OF THIS LIMITED WARRANTY. OUR LIABILITY SHALL UNDER NO CIRCUMSTANCES EXCEED THE ACTUAL AMOUNT PAID BY YOU FOR THE DEFECTIVE PRODUCT, NOR SHALL WE UNDER ANY CIRCUMSTANCES BE LIABLE FOR ANY CONSEQUENTIAL, INCIDENTAL, SPECIAL OR PUNITIVE DAMAGES OR LOSSES, WHETHER DIRECT OR INDIRECT. SOME STATES DO NOT ALLOW THE EXCLUSION OR LIMITATIONS OF INCIDENTAL OR CONSEQUENTIAL DAMAGES, SO THE LIMITATION MAY NOT APPLY TO YOU.
11. This warranty gives you specific legal rights, and you may also have additional rights which vary from state to state.

Notes

ADIME902-BASE-48-LS-GRY

© 2024 Viva Comfort

vivacomfort.com