ASSEMBLY INSTRUCTION
44#

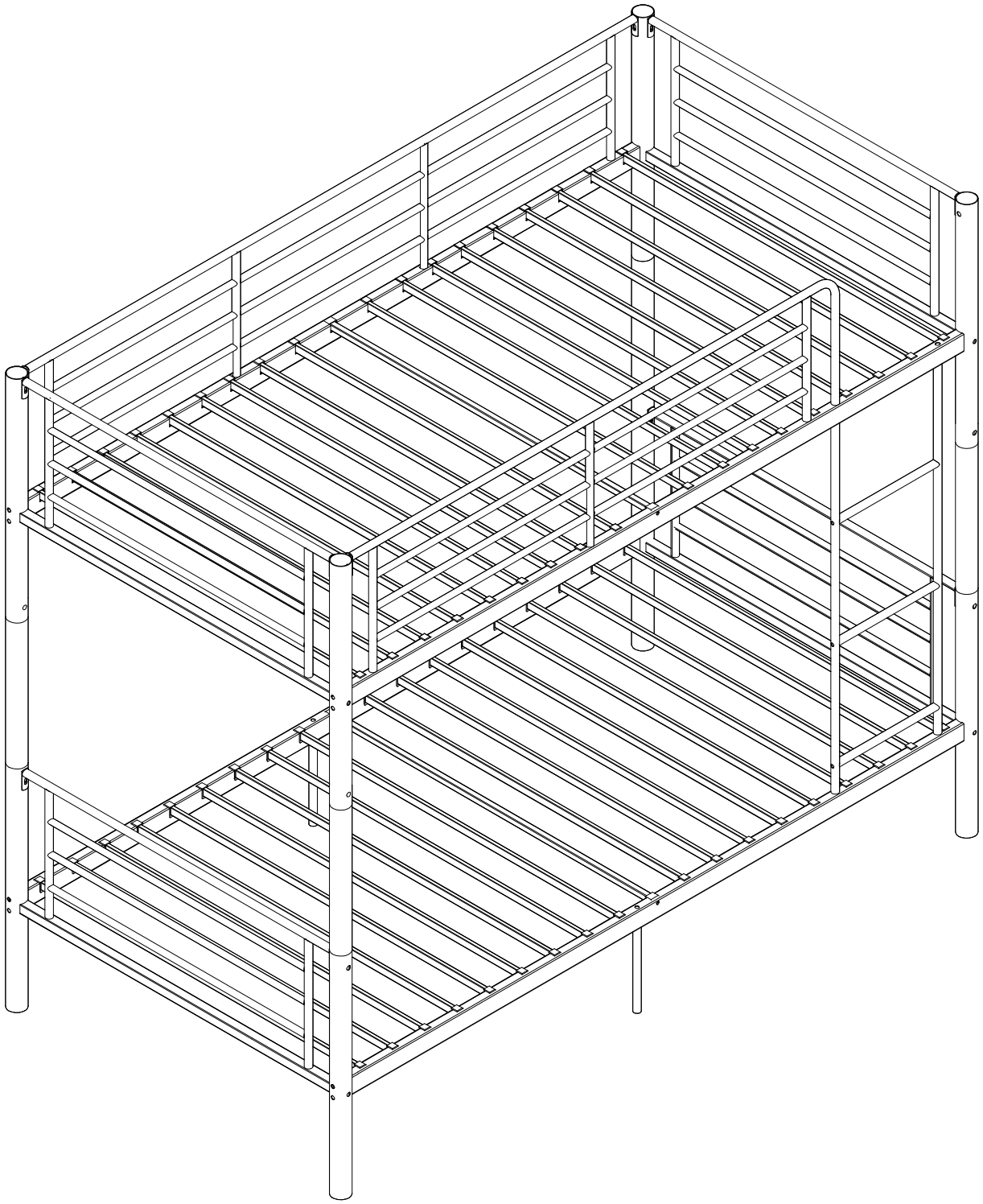

IMPORTANT NOTE

1.Please check that all parts are complete before installation.
2.Please strictly follow the installation steps to install.
3.Please install the bed on a clean and smooth surface to prevent any damage
4.Please do not use the power tools to assemble the bed.
5.Please periodically check all the fittings and re-tighten as necessary.
6. Please do not use the bed unless all bolts and screw are firmly secured.
7.When assembling the bed, first secure the screws loosely, then tighten them all at the end after all parts are assembled.

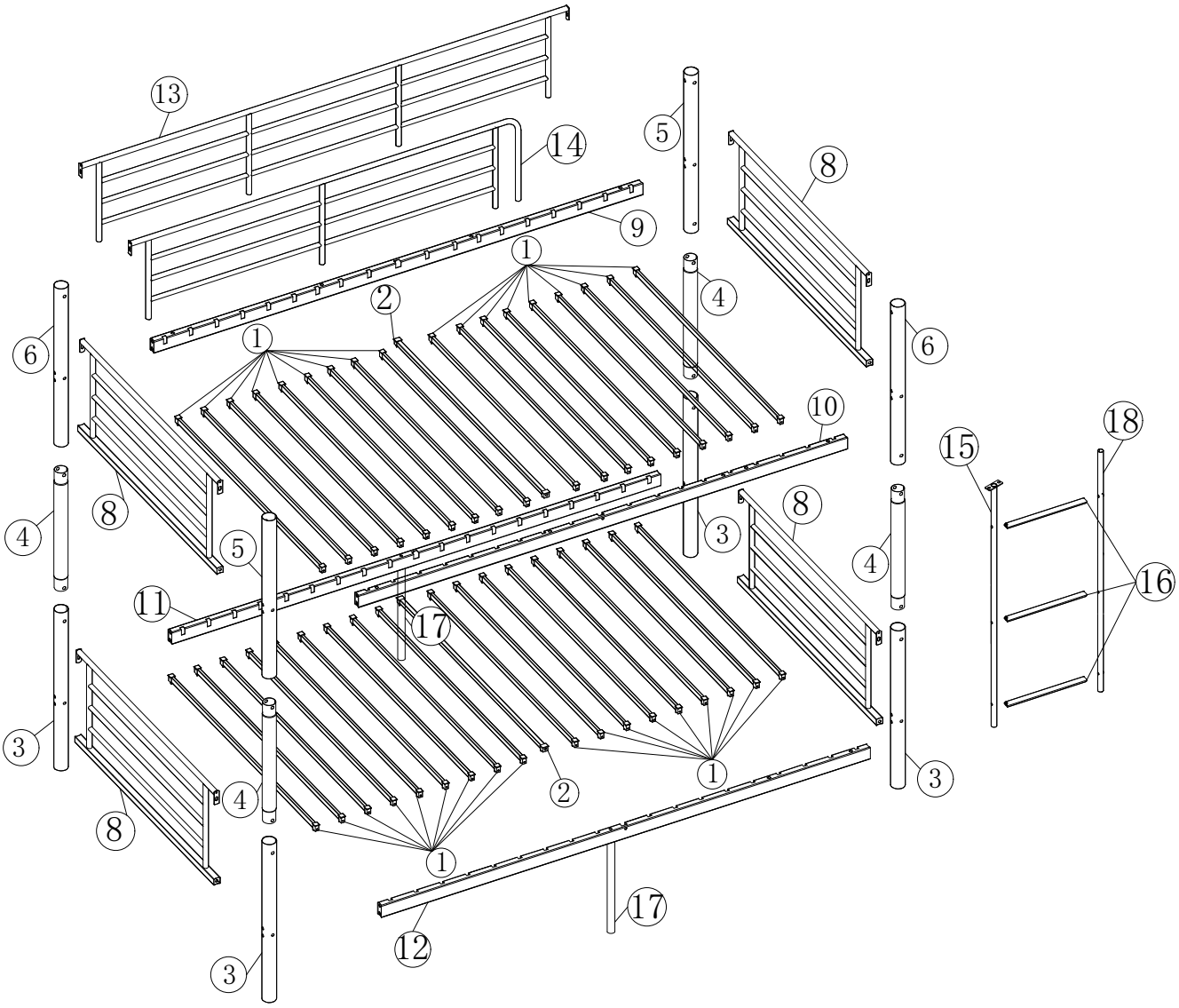

Components List

① x36 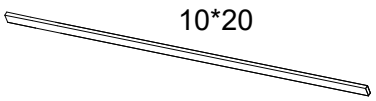	② x2 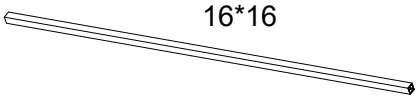
③ x4 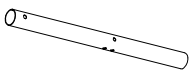	④ x4 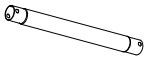
⑤ x2 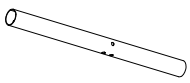	⑥ x2 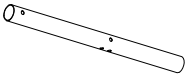
	⑧ x4 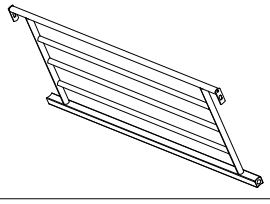

Components List

⑨ x1 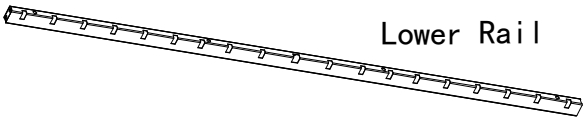 Lower Rail	⑩ x1 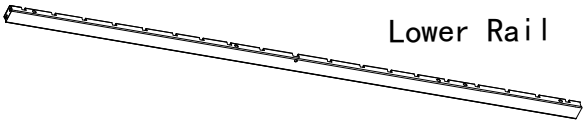 Lower Rail
⑪ x1 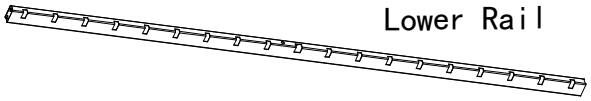 Lower Rail	⑫ x1 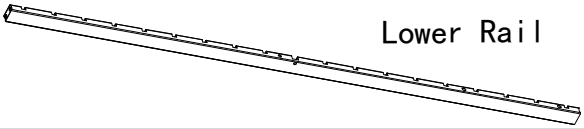 Lower Rail
⑬ x1 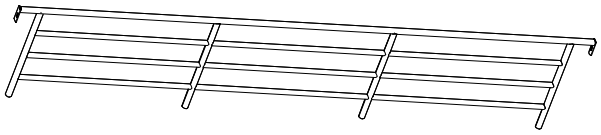	⑭ x1 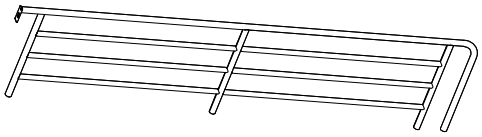
⑮ x1 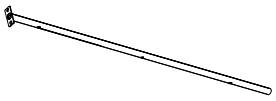	⑯ x3 
⑰ x2 	⑱ x1 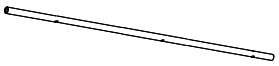

Hardwares List

Item	Description	Qty
A	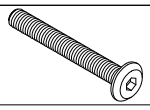 M8*70mm	24
B	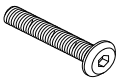 M8*60mm	11
C	 M8*40mm	8
D	 M8*35mm	6
E	 M8x16	9
F	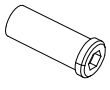 M8x25	8
G	 M6x40	4
R	 M6x16	2

Item	Description	Qty
H	 (16x16)	4
I	 (10x20)	72
J	 Big	40
K	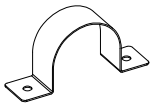	2
L	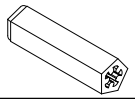	4
M	 M6*35mm	4
N		8
P	 M8 Allen key	2
T	 M6 Allen key	2

STEP1

A		M8x70	8	C		M8x40	4	E		M8x16	4
F		M8x25	4	J		Big	16				

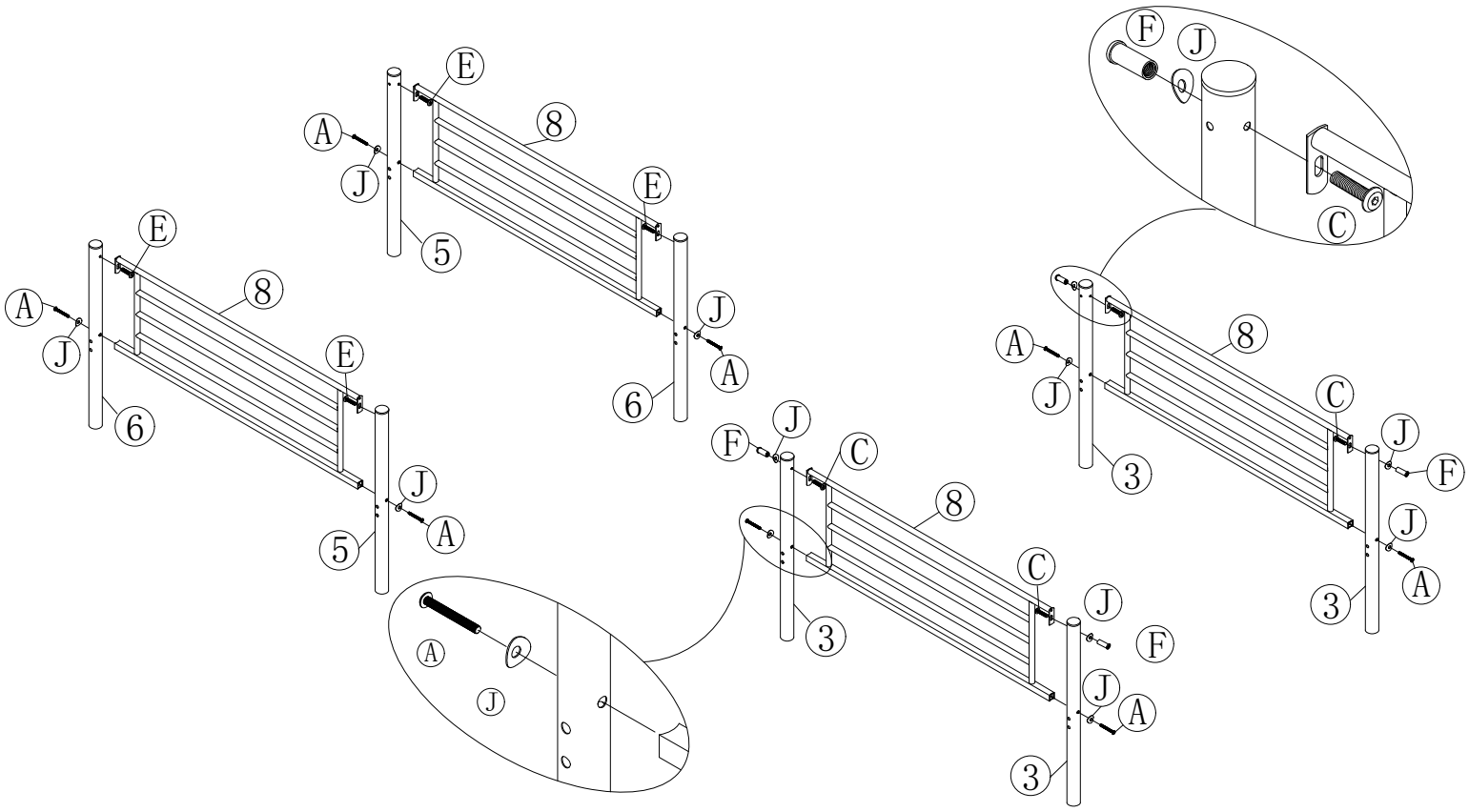

STEP2

A		M8x70	16	E		M8x16	2	J		Big	16

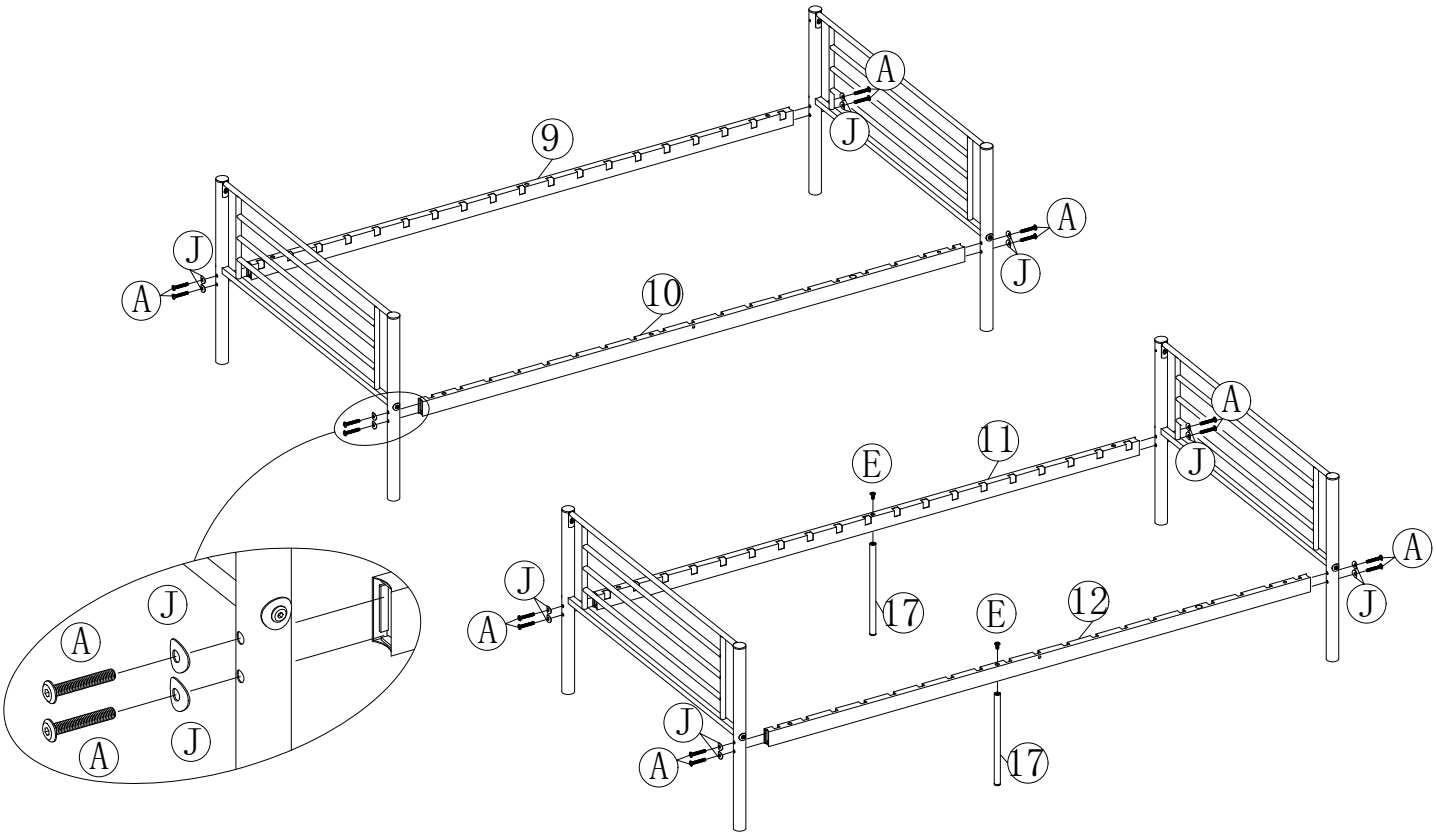

STEP3

G	M6x40	4	
N		8	

H	(16x16)	4	
I	(10x20)	72	

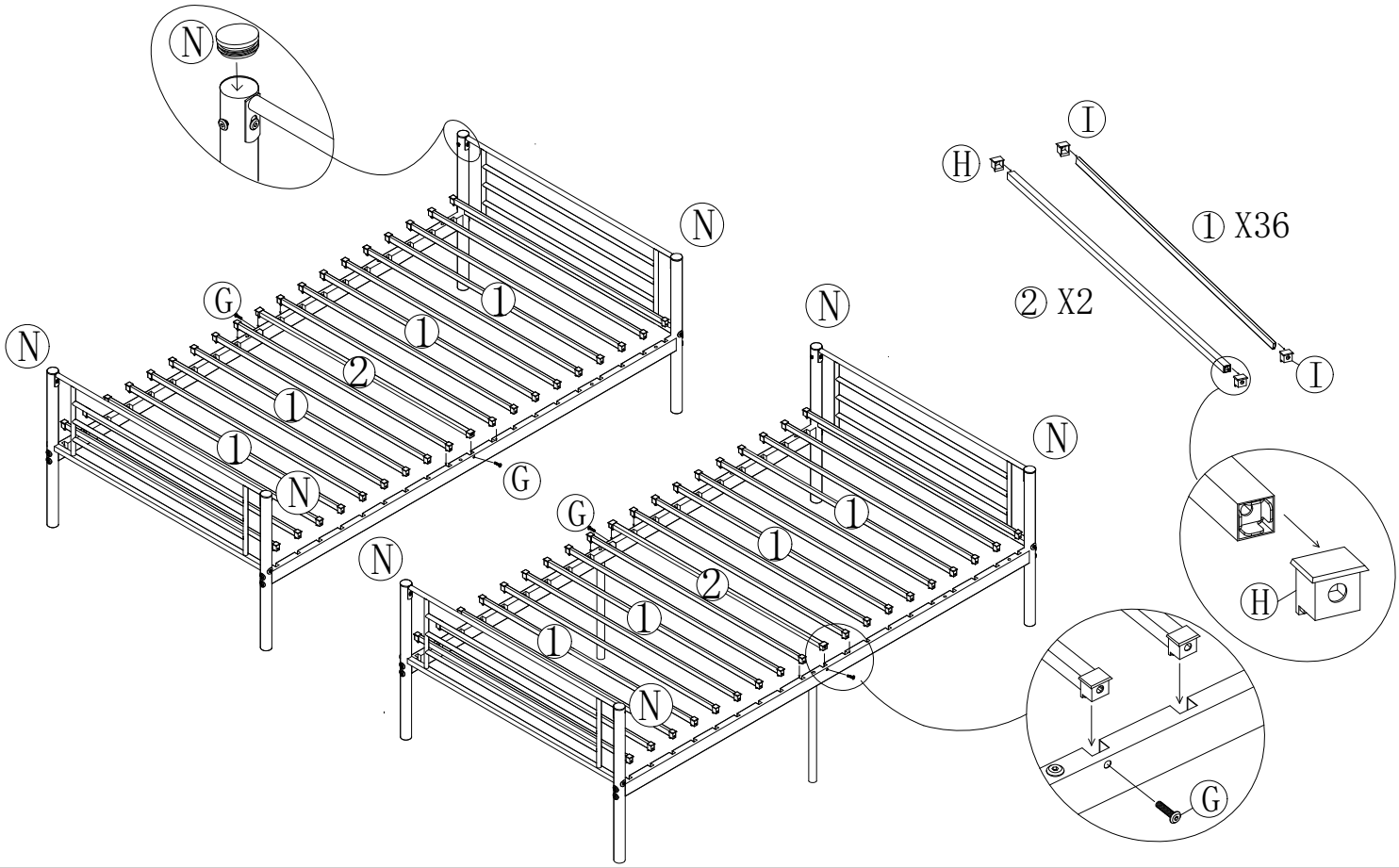

STEP4

B	M8x60	8	
E	M8x16	3	

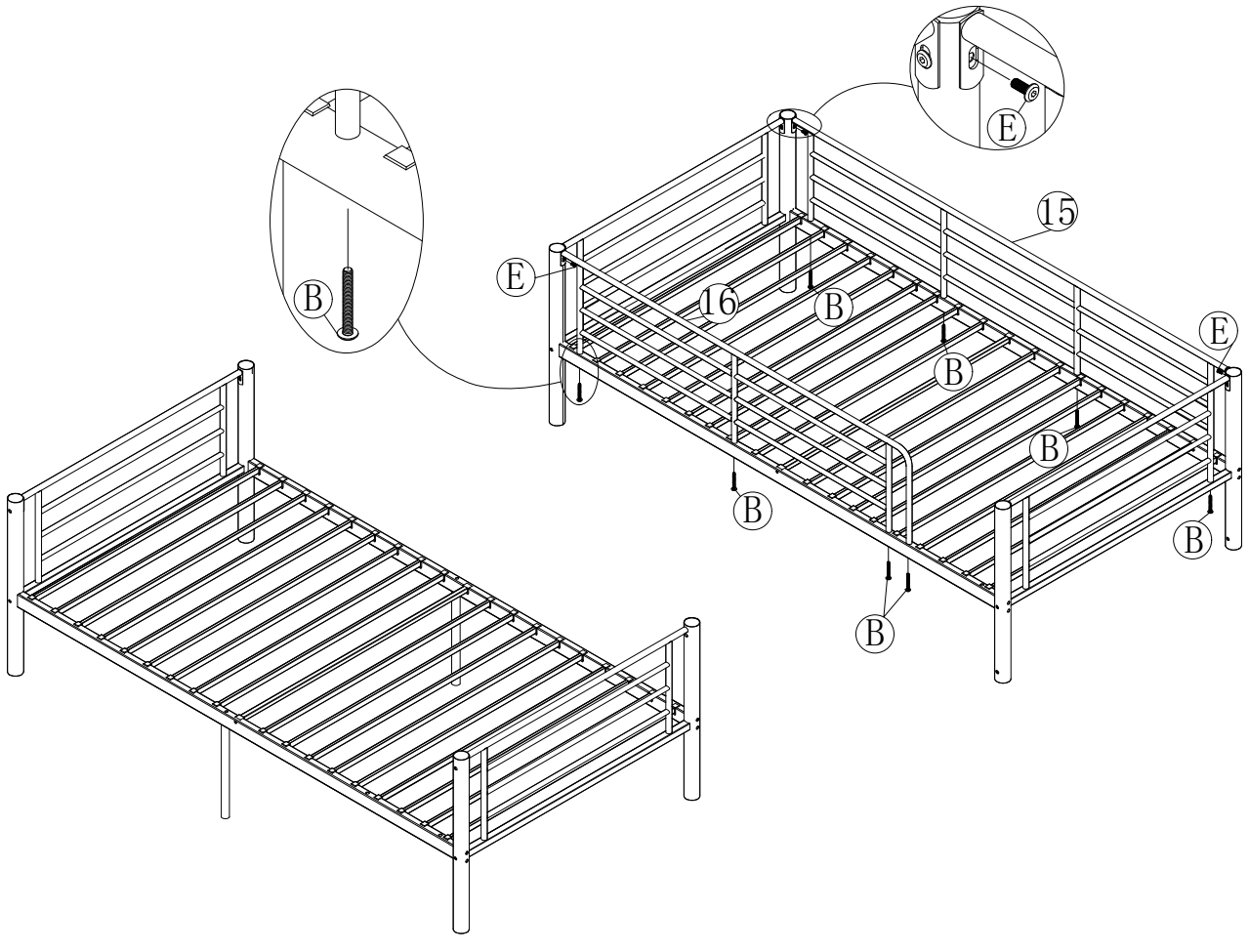

STEP5

C	M8x40	4	
F	M8x25	4	
J	Big	8	

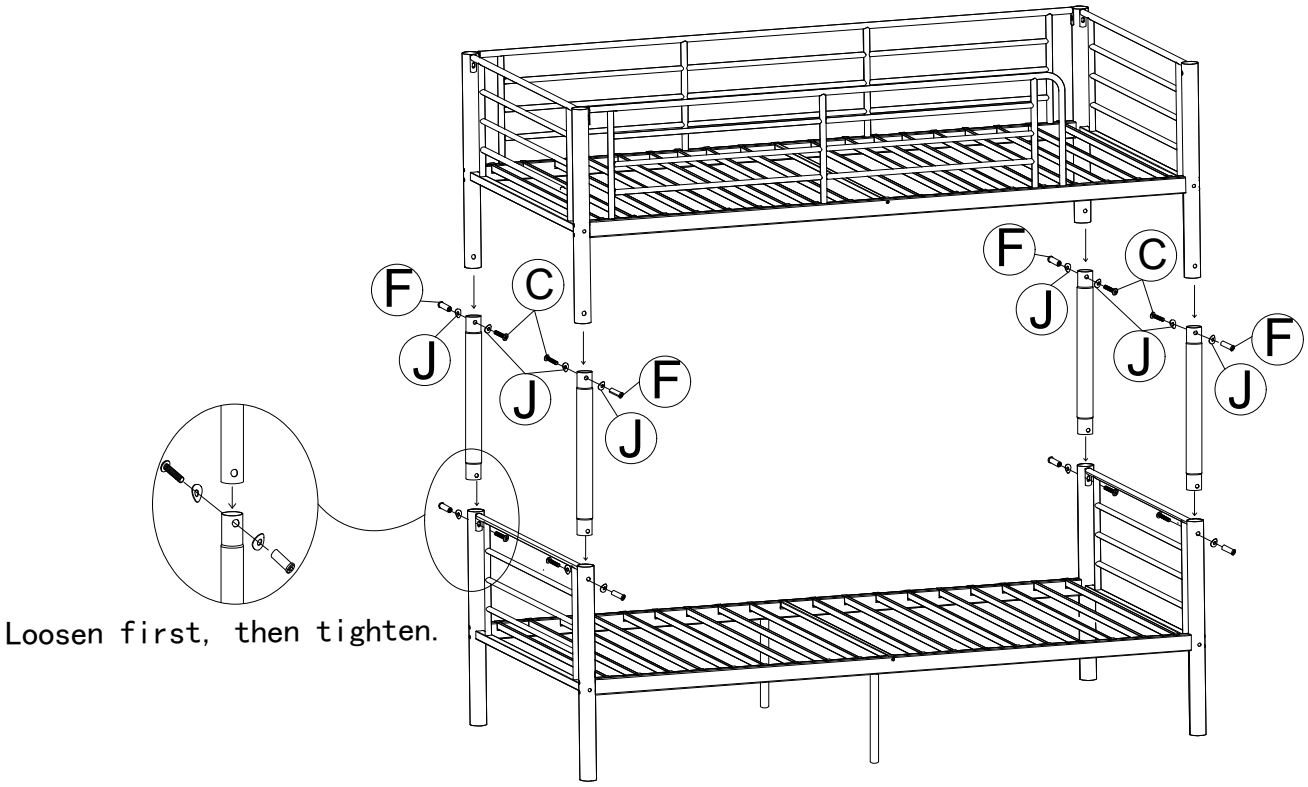

Loosen first, then tighten.

STEP6

B	M8x60	3	
D	M8x35	6	
R	M6x16	2	
M	M6x35	4	
L		4	
K		2	

