# USE AND CARE GUIDE

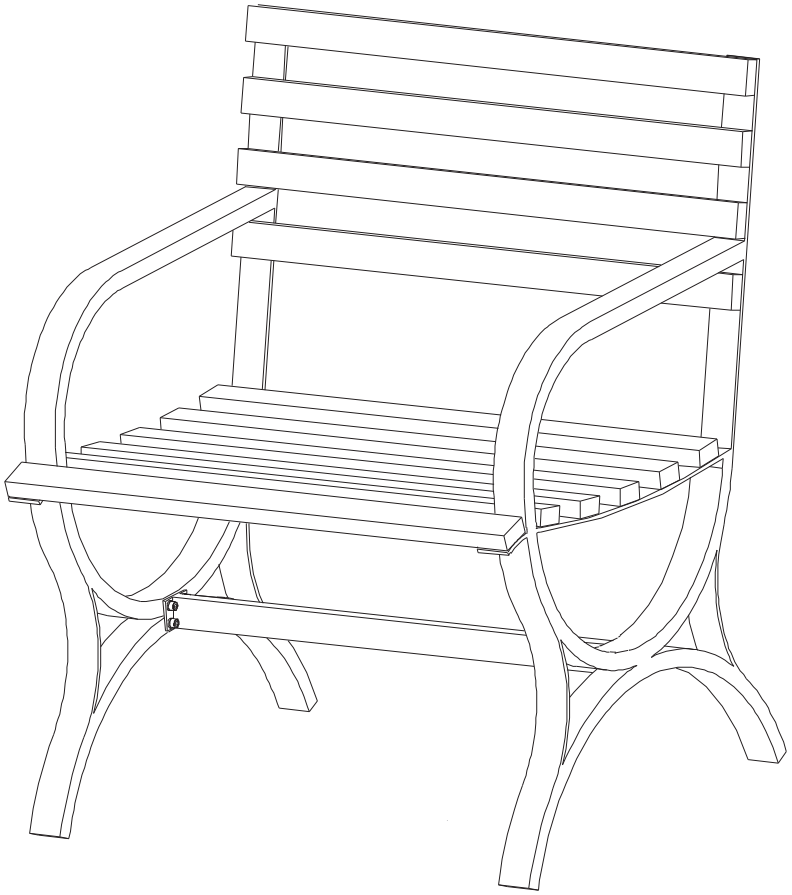

# Before starting assembly:

- Read all instructions throughly.
- Open and check boxes for parts list.
- If any parts are broken or missing call or email customer service.
- Keep all packaging until you are satisfied with your product.
- Returns are not accepted without original packaging.
- Make sure you have ample space for assembly.

# Safety Information

- Tighten each bolt firmly and properly. Do not completely tighten screws until all screws are started.
- Some parts may contain sharp edges. Wear protective gloves as necessary.
- Children under the age of 16 should not be engaged in the assembly, removal or disassembly of the product. Children under the age of 10 should be supervised by a competent adult while using this furniture.
- Please keep children out of the assembly area during assembly.
- This set is heavy, and may require two adults for safe assembly.
- Never use this product as a support. Do not shake, lean, or climb on the product at any time.



**DANGER :** Do not allow children to play with plastic wraps or small parts to prevent potential chocking hazard.



**CAUTION:** Read all the instructions before assembly. Failure to do so may result in faulty assembly and potential injury!

# Warranty

## LIMITED WARRANTY

This warranty is a limited warranty, and applies to the original purchase is required. This is a residential warranty and does not apply to commercial use. This collection carries a (1) year limited warranty and is valid from original date of purchase to the original owner (proof of purchase required).

## WHAT IS COVERED

We warrant the frame to be free of Manufacturing defects to the original purchaser for one year.

## WHAT IS NOT COVERED

This warranty does not cover commercial use, hardware, acts of nature, fire, freezing and abusive.
In addition, purchased parts are not covered under this warranty.
We reserve the right to make substitutions with similar merchandise, if the model in question is no longer in production.

For a copy of our full limited warranty, please contact our customer service team below.

# Pre-assembly

Assemble the item on a soft, non-abrasive surface, such as carpet or cardboard to avoid damaging the item. Seek assistance to assemble bulky or heavy items.

**NOTE:** Identify all parts packed in the carton against the parts list.
Remove all the protective material carefully and DO NOT use a knife to prevent scratching the furniture.

## PACKAGE CONTENTS

**NOTE:** Hardware not shown to actual size.

**A** X1

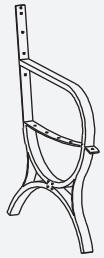

**B** X1

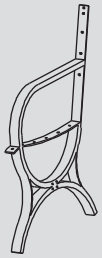

**C** X9



**D** X1



**E** X30

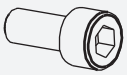

**F** X22



**G** X1

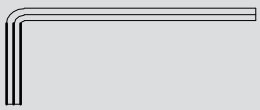

**H** X1



**I** X8



# Assembly

**1**

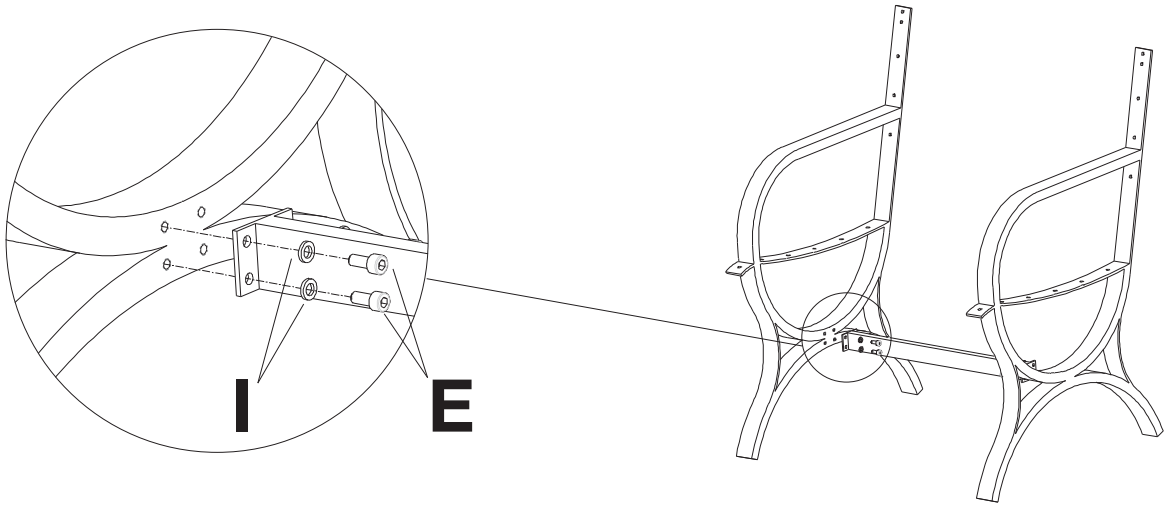


**2**

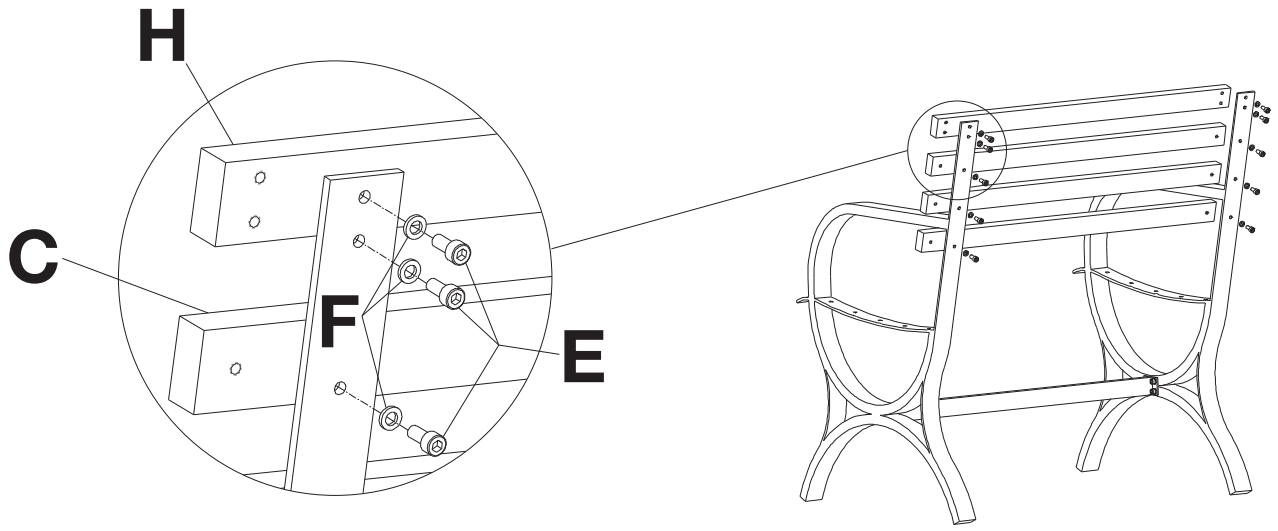

# Assembly

**3**

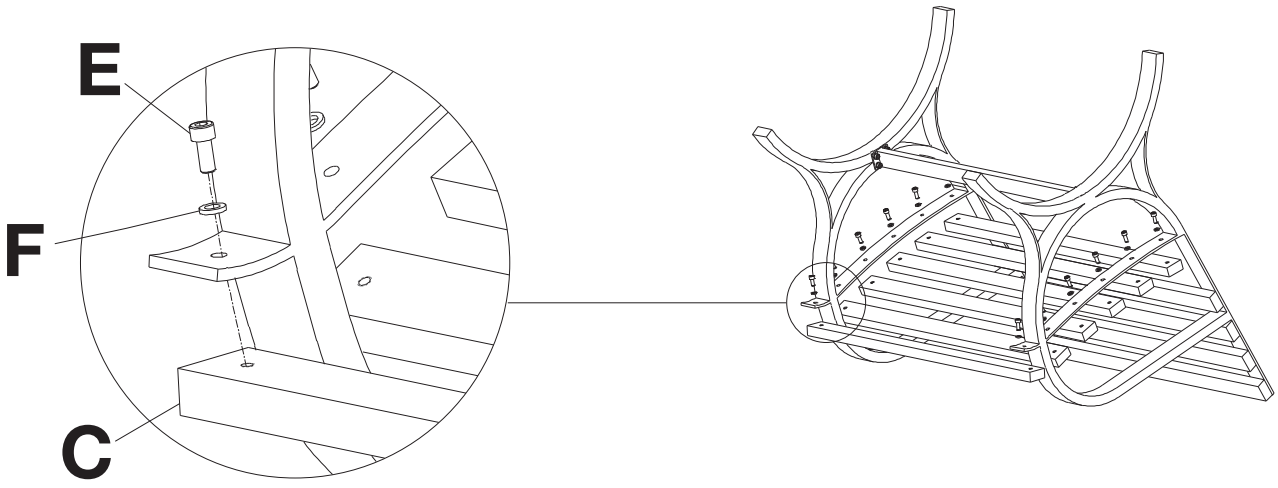


**4**

