Assembly Instructions

Caution : You must read this before you proceed

Care & Maintenance



- Not for commercial use. For residential use only.



- Furniture may scratch floors. We recommend using furniture pads to protect your floors.



- Do not put hot items directly on furniture surface.



- Do not clean furniture with harsh cleansers or polish.



- Do not place furniture under direct sunlight.



- Do not place furniture near heating or cooling vents.



- Do not write on furniture without a padded barrier to protect the surface.



- Do not place furniture outside . For indoor use only.



- Stains may be removed with mild soap solution and damp cloth.



- Children should not climb or jump on the furniture.



- Dust and pick-up spills using a clean, non-colored, lint-free cloth.

Please look in carton for hardware packs and legs.
Sets often ship in multiple boxes and may arrive a day or two apart.

Upholstered Bed

N757P551482

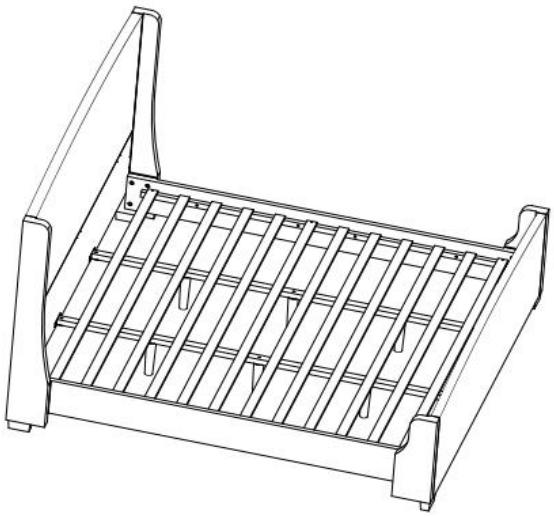

Parts List N757P551482

Label	Picture	Description	QTY
A	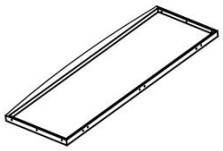	Headboard A	1
B	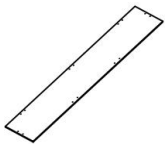	Headboard B	1
C		Side Frame C	1
D	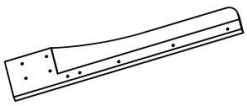	Side Frame D	1
E		Side rail E	1
F		Side rail F	1
G	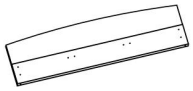	Footboard	1
H	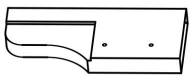	Side Frame H	1

I	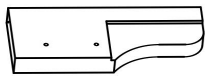	Side Frame I	1
J	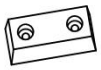	Leg-J	4
K	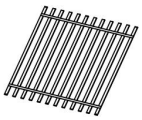	Bed Slat	1
L	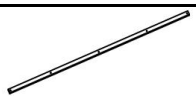	Center Rail	2
M		Middle support leg	6
N		Iron Bracket	4
O		L-Iron O	5
P		L-Iron P	2

Hardware N757P551482

Label	Picture	Description	QTY
①		Bolt Ø1/4"×3/4"	25
②		Bolt Ø1/4"×1-1/2"	11
③		Flat Washer Ø1/4"×16mm×1.5	19
④		Flat Washer Ø20"x Ø10.5mmx 1.5	9
⑤		Bolt Ø1/4"×2-1/2"	21
⑥		Bolt Ø1/4"×1"	13
⑦	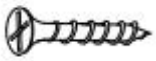	Screw #8×1"	7
⑧		Allen Wrench 4.0×21×57	1
⑨	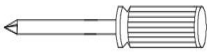	Screwdriver (Not provided)	1

Assembly Preparation

Before Beginning Assembly:

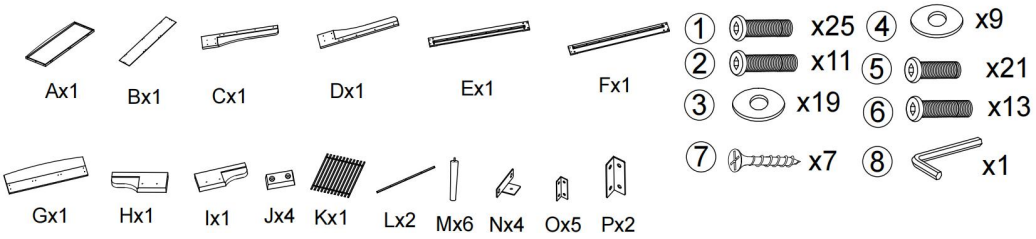

- Read instructions, cover to cover-
- Have 2 adults on hand for assembly-
- Do not assemble on flooring or carpet-
- Assemble on a clean non-marring surface (packing foam)-
- Save all packaging until finished-

Assembly Steps

Overview

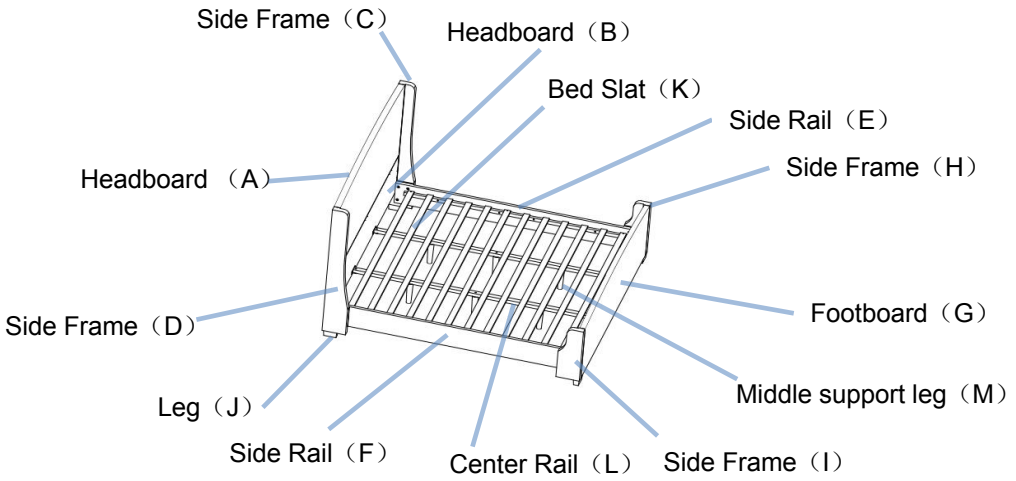

This Upholstered Bed has multiple parts and may require up to some 30 minutes to assemble. To give you an overview of the Upholstered Bed parts, the above picture is to help you put the various parts into perspective. Please read through the instructions below to familiarise yourself with the parts and steps before assembly.

Step 1

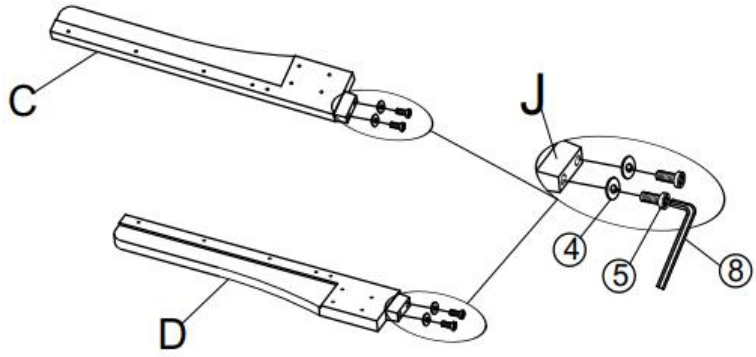

Attach Leg （J）to Side Frame（C/D）by using Bolt（⑤）, Flat Washer （④） and Allen Wrench（⑧）, as pictured above.

Step 2

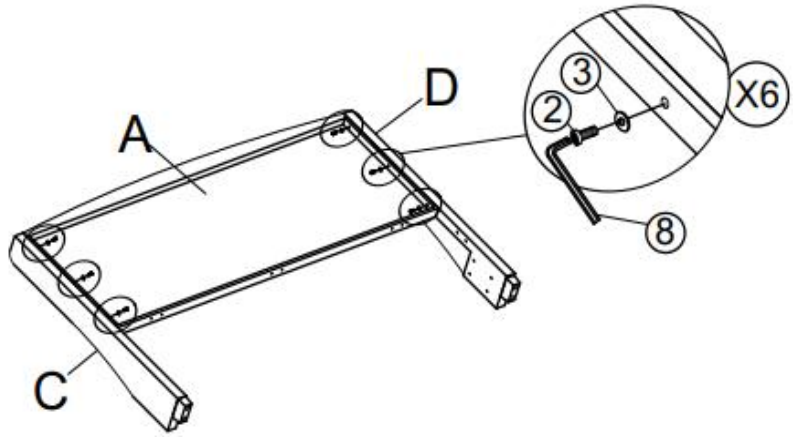

Attach Headboard（A）to Side Frame（C/D）by using Bolt（②）, Flat Washer（③） and Allen Wrench（⑧）, as pictured above.

Step 3

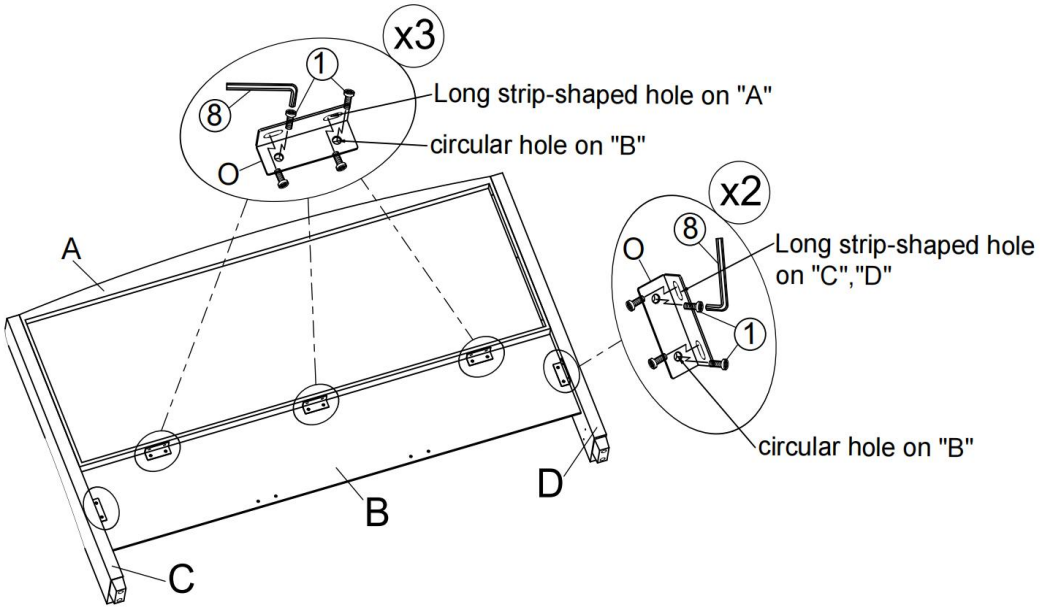

Attach Headboard（B）to Headboard（A）and Side Frame（C/D）by using L-Iron（O）,Bolt（①） and Allen Wrench（⑧）, as pictured above.

Step 4

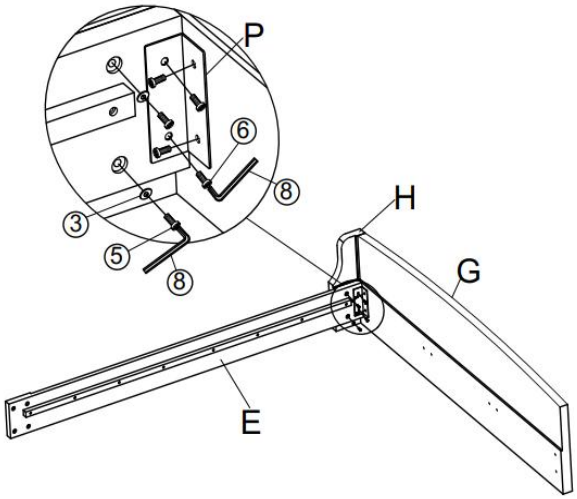

1.Attach L-Iron（P）to Side rail（E）and Footboard（G） by using Bolt（⑥）and Allen Wrench（⑧）,as pictured above.
2.Attach Side rail（E）to Side Frame（H）by using Bolt（⑤）,Flat Washer（③）and Allen Wrench（⑧）,as pictured above.

Step 5

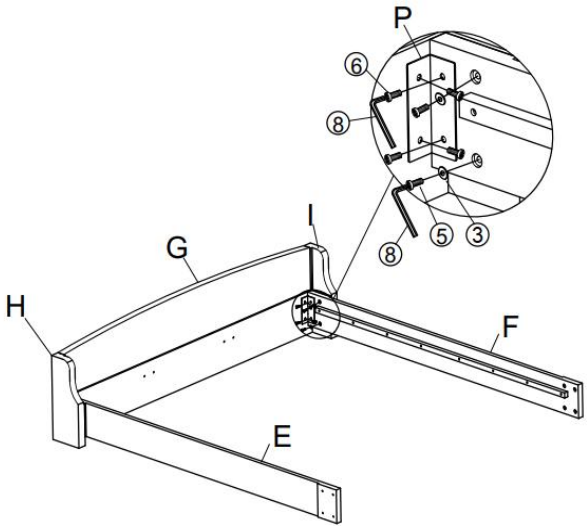

1.Attach L-Iron（P）to Side rail（F）and Footboard（G） by using Bolt（⑥）and Allen Wrench（⑧）,as pictured above.
2.Attach Side rail（F）to Side Frame（I）by using Bolt（⑤）,Flat Washer（③）and Allen Wrench（⑧）,as pictured above.

Step 6

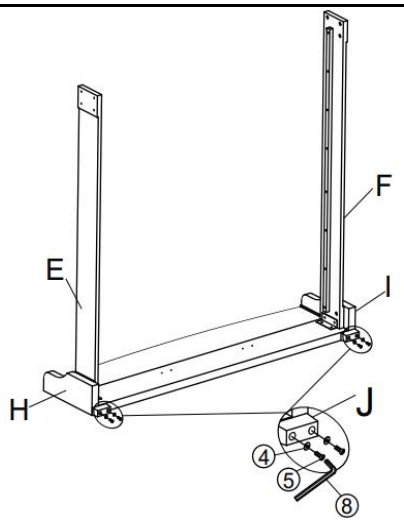

Attach Leg （J）to Side Frame（H/I）and Footboard（G）by using Bolt（⑤）, Flat Washer（④） and Allen Wrench（⑧）, as pictured above.

Step 7	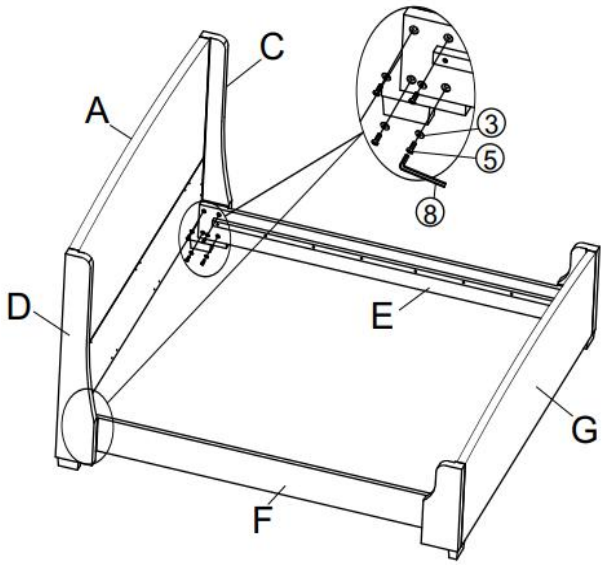
Attach Side rail（E/F）to Side Frame（C/D）by using Bolt（⑤）,Flat Washer（③）and Allen Wrench（⑧）,as pictured above.	
Step 8	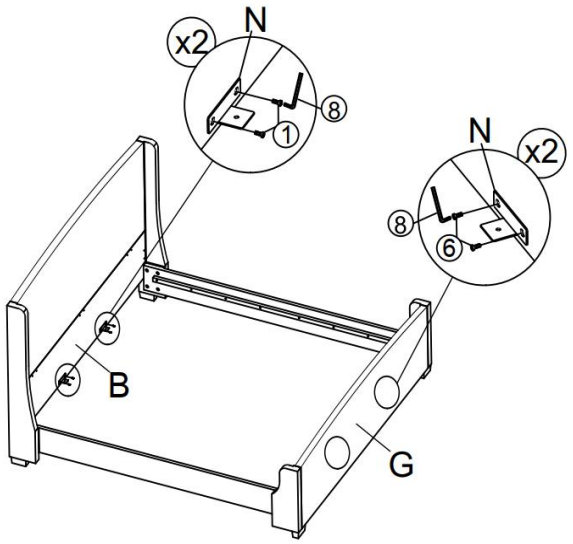
1.Attach Iron Bracket（N）to Headboard（B）by using Bolt（①）and Allen Wrench（⑧）, as pictured above. 2.Attach Iron Bracket（N）to Footboard（G）by using Bolt（⑥）and Allen Wrench（⑧）, as pictured above.	
Step 9	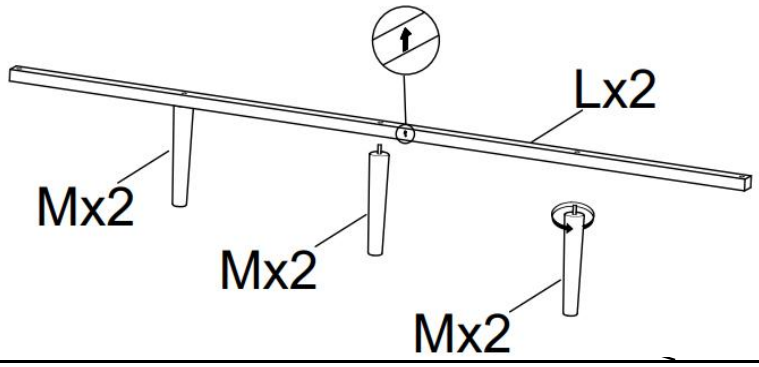
Install Middle support legs (M) on Center Rail (L) , as pictured above.	

Step 10	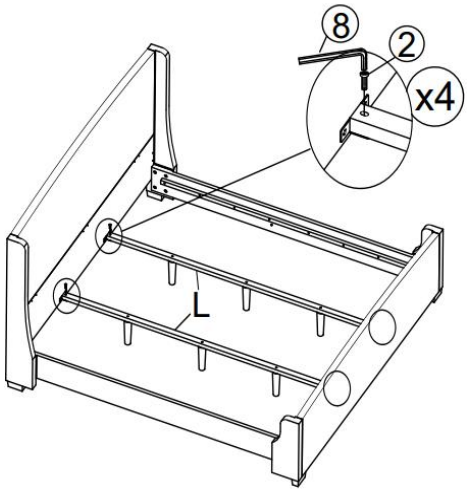
Attach Center Rail (L) to Iron Bracket (N) by using Bolt (②) and Allen Wrench (⑧), as pictured above.	
Step 11	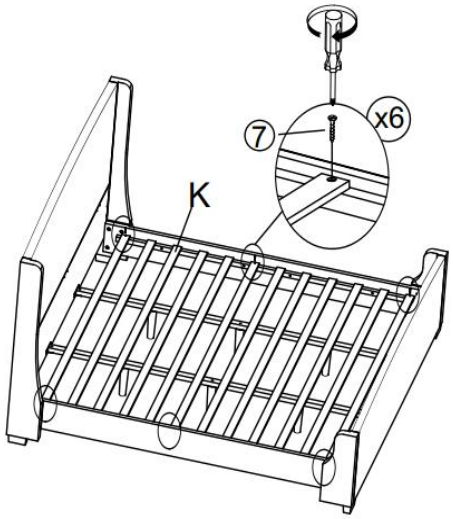
Attach Bed Slat（K）to Side rail（E/F） by using Screw（⑦）, as pictured above.	
Step 12	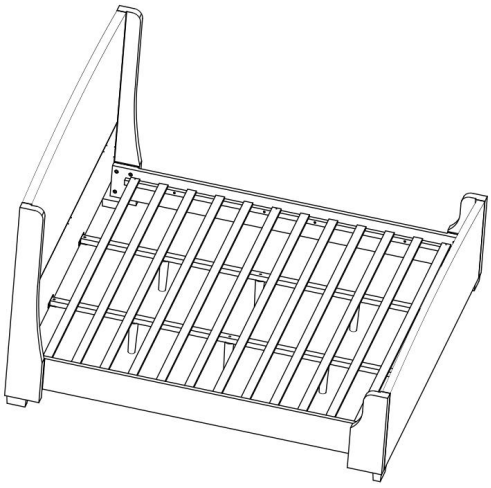
This Upholstered Bed is ready for use. This Upholstered Bed can only be used on a flat, level surface.	