CORONA SMALL 5 DRAWER CHEST #COR94

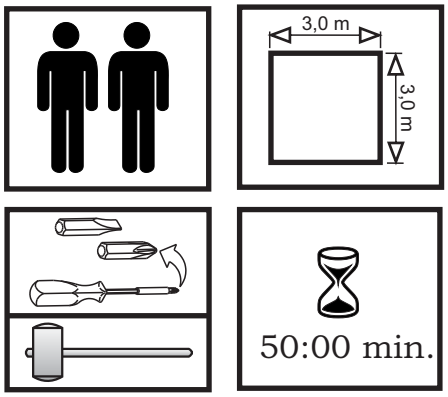

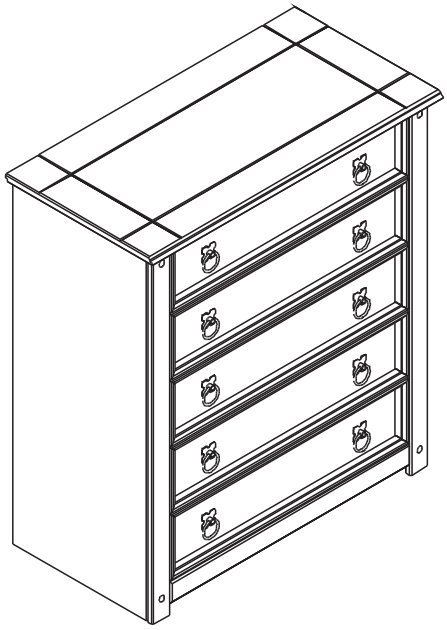

- Please check that all fittings are correct before assembling the item.
- Replacement parts can be supplied for any damages to the item.
- Please keep all packaging until the item is assembled as we will require information from this if replacement parts are required.
- If you have any questions regarding the assembly of your item please call 01709 836856 or email admin@mercersfurniture.co.uk

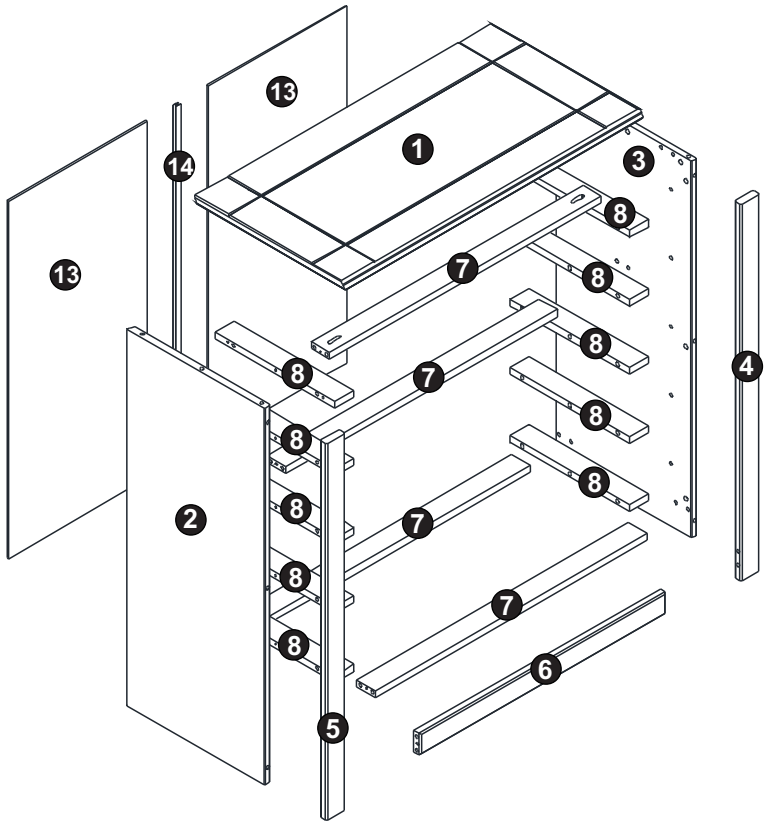

Width = 80cm
Depth = 40,5cm
Height = 89,1cm

5x

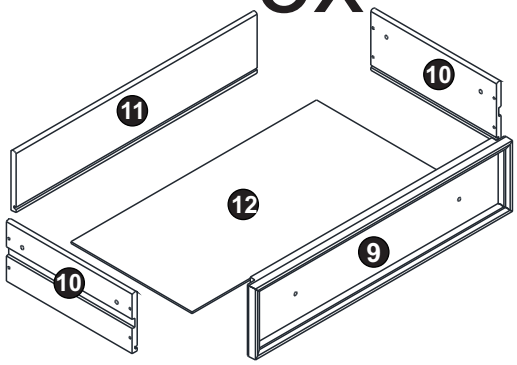

A	8,0 x 25 mm	52 x	D	8 x 8	24 x	G	04 x
B	3,5 x 30 mm	38 x	E		10 x	H	3,0 x 14 mm 02 x
C	8,0 x 40 mm	10 x	F		10 x	I	3,0 x 30 mm 42 x

J		12x
K		01x
L	4,0 x 25 mm	12 x
Y		01x

ORDER: 2025-01-03 PROFORMA: 09/2025 BATCH NUMBER: 24/0160

01

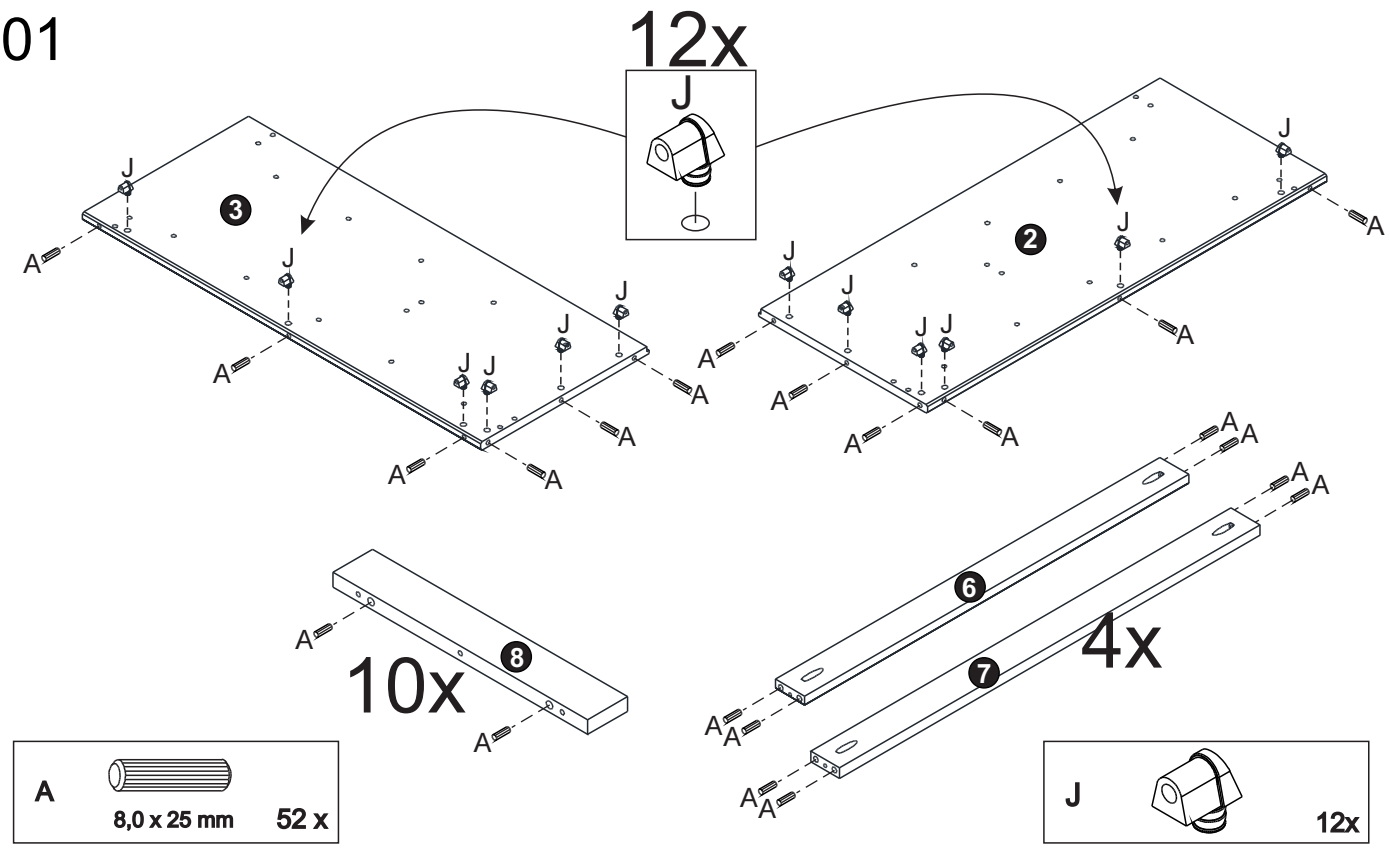

A	8,0 x 25 mm	52 x

J	12x

02

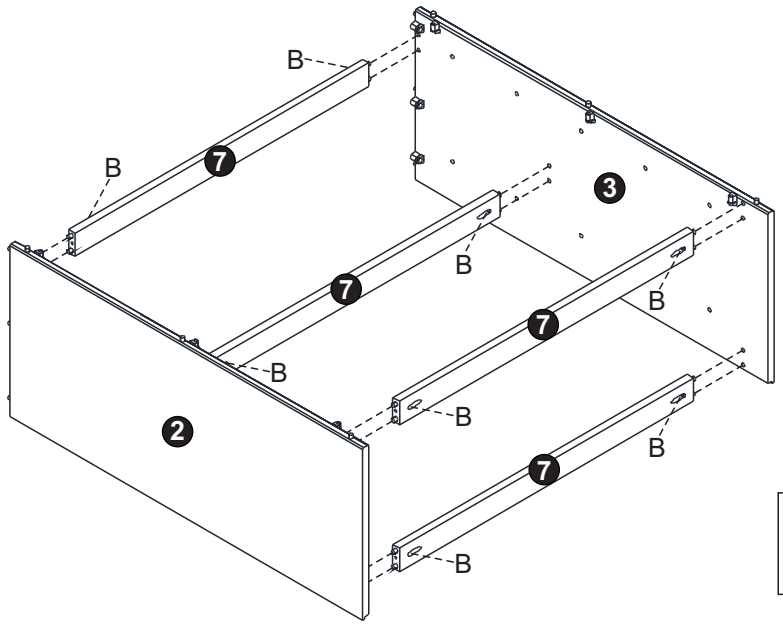

B	3,5 x 30 mm	08 x

03

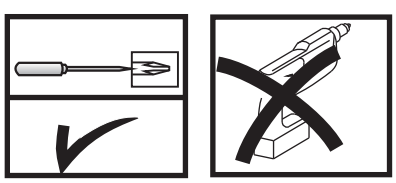

ASSEMBLE ON A FLAT SURFACE

I	3,0 x 30 mm	02 x

04

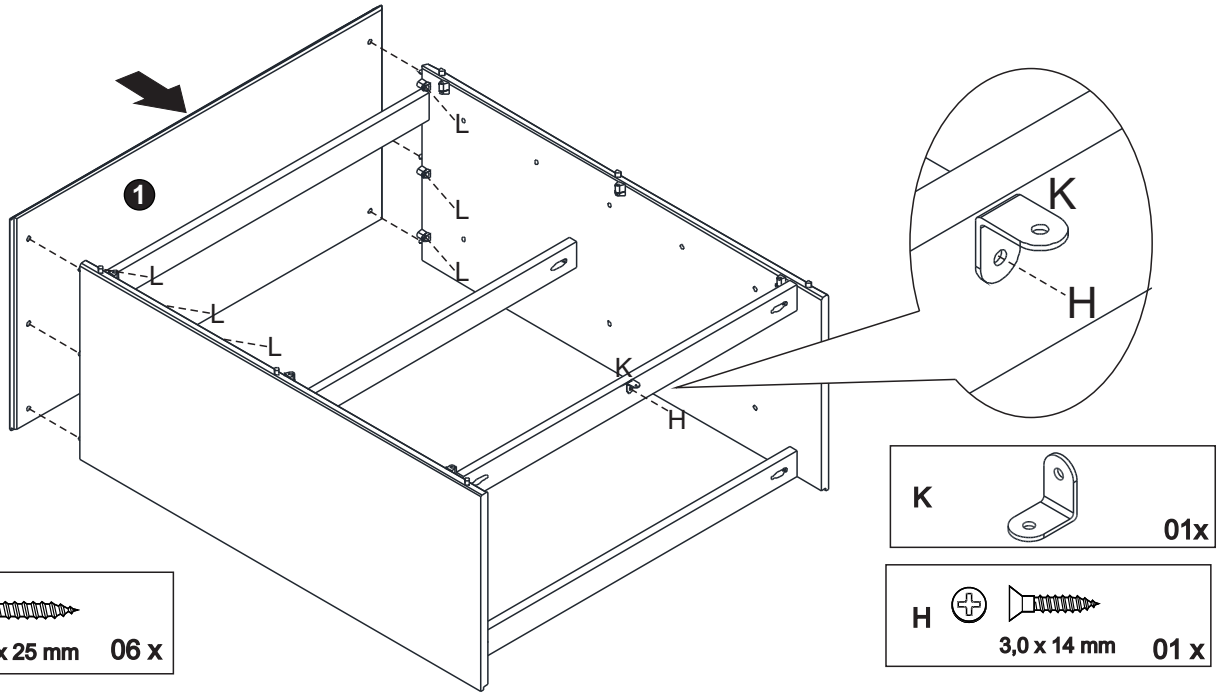

L 4,0 x 25 mm 06 x

K 01x

H 3,0 x 14 mm 01 x

05

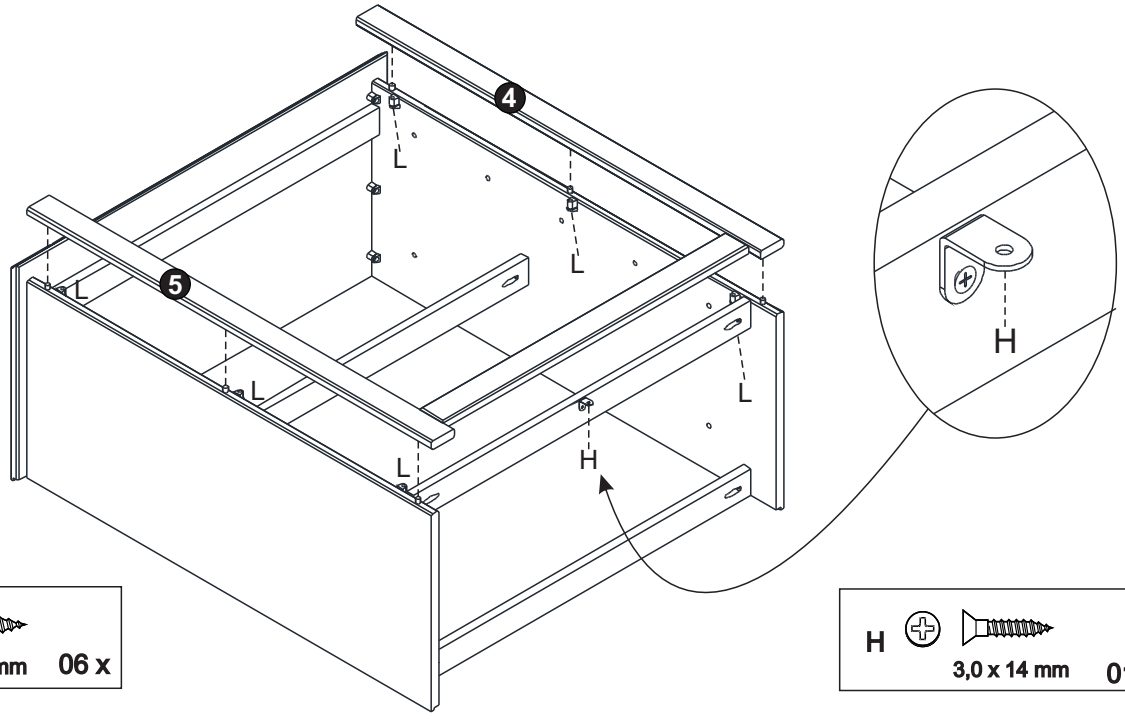

L 4,0 x 25 mm 06 x

H 3,0 x 14 mm 01 x

06

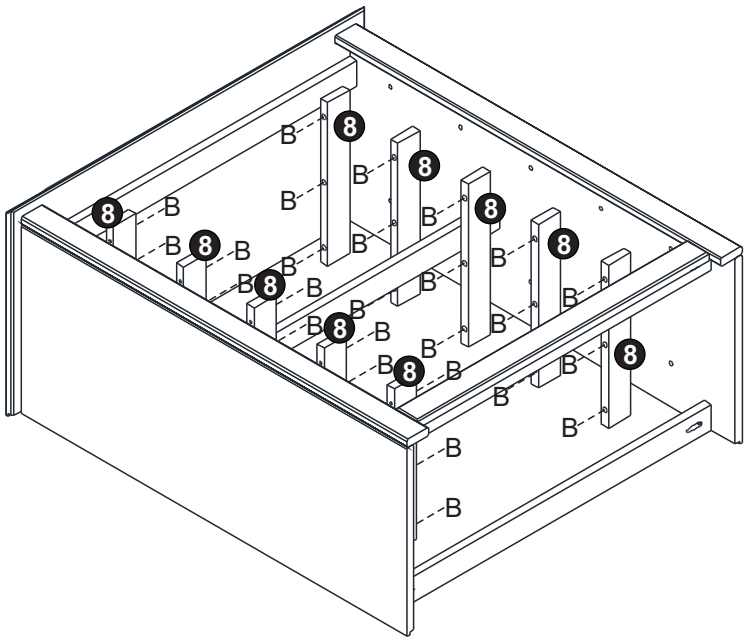

B 3,5 x 30 mm 30 x

07

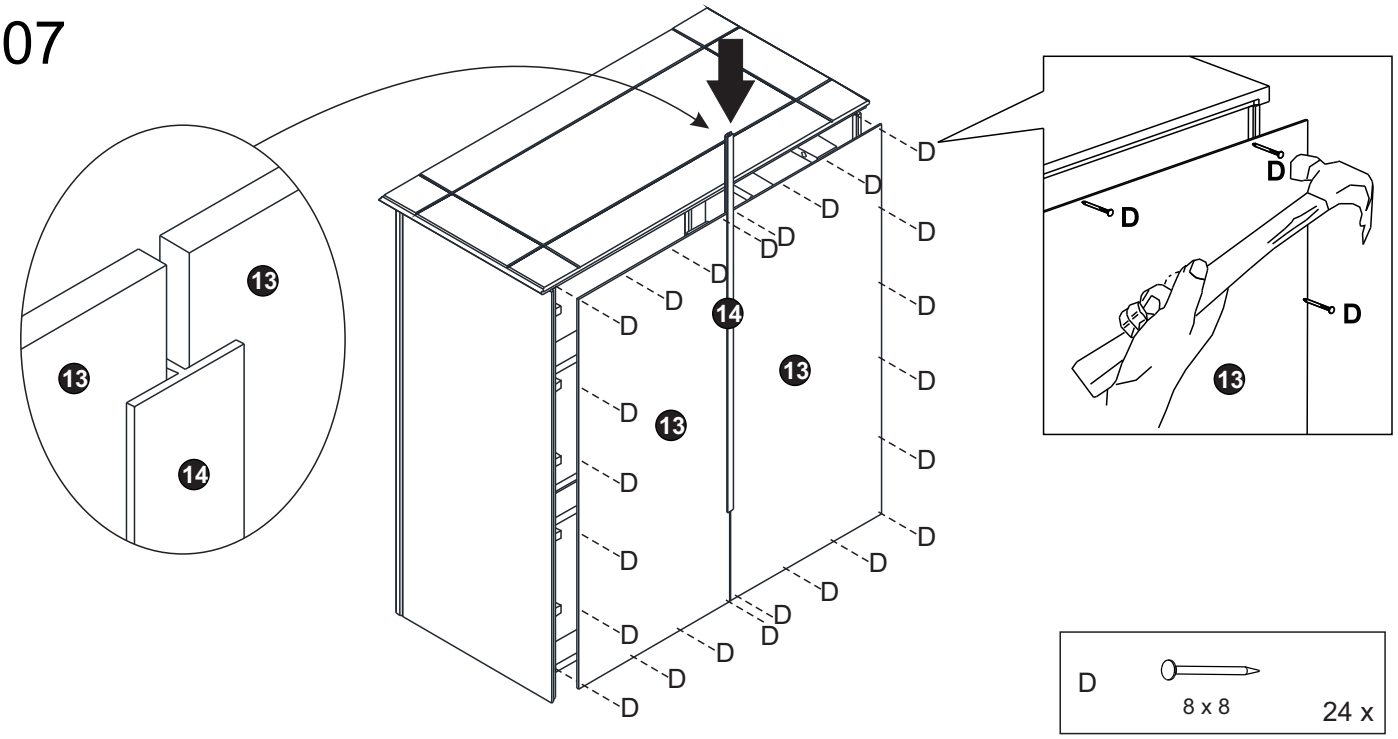
13
14
D
D
D

10

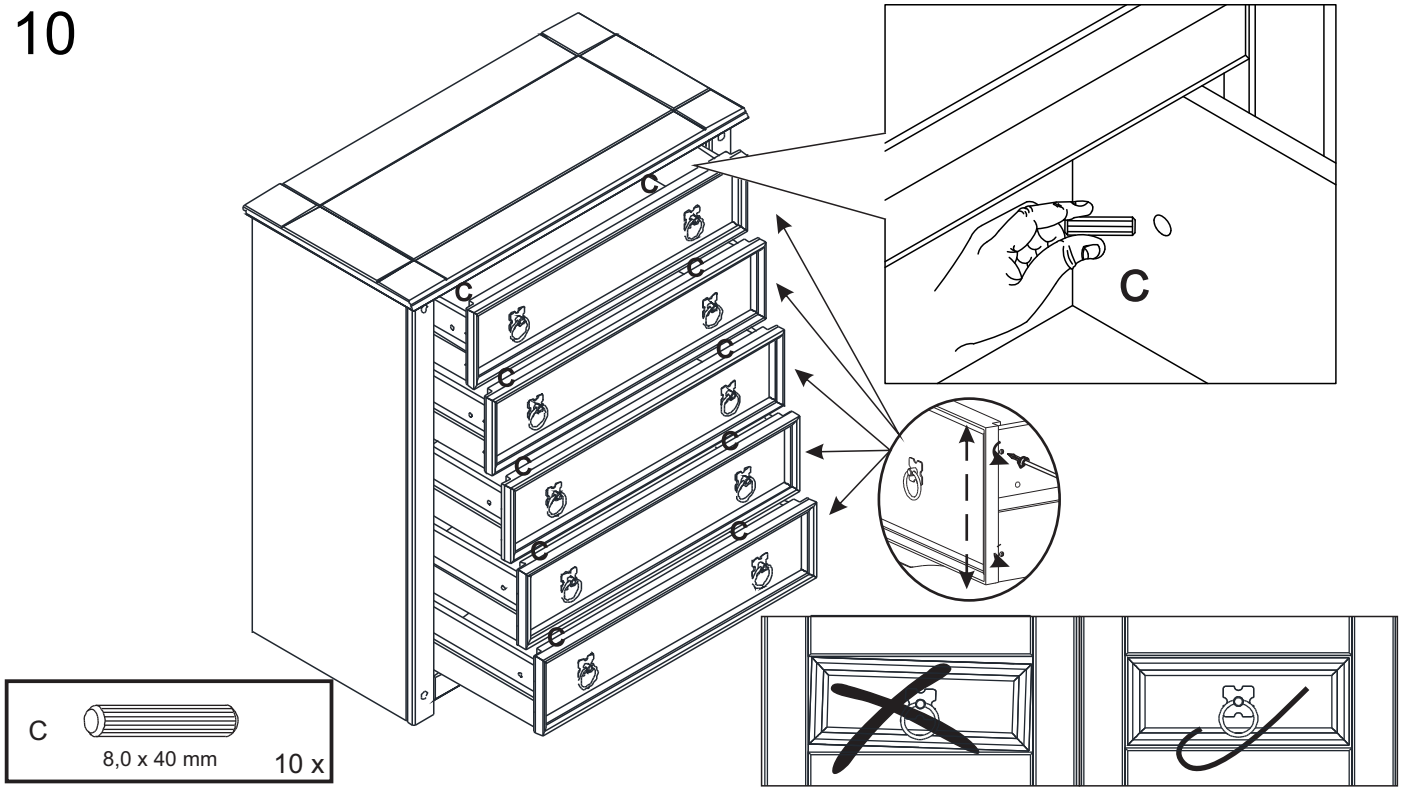

11

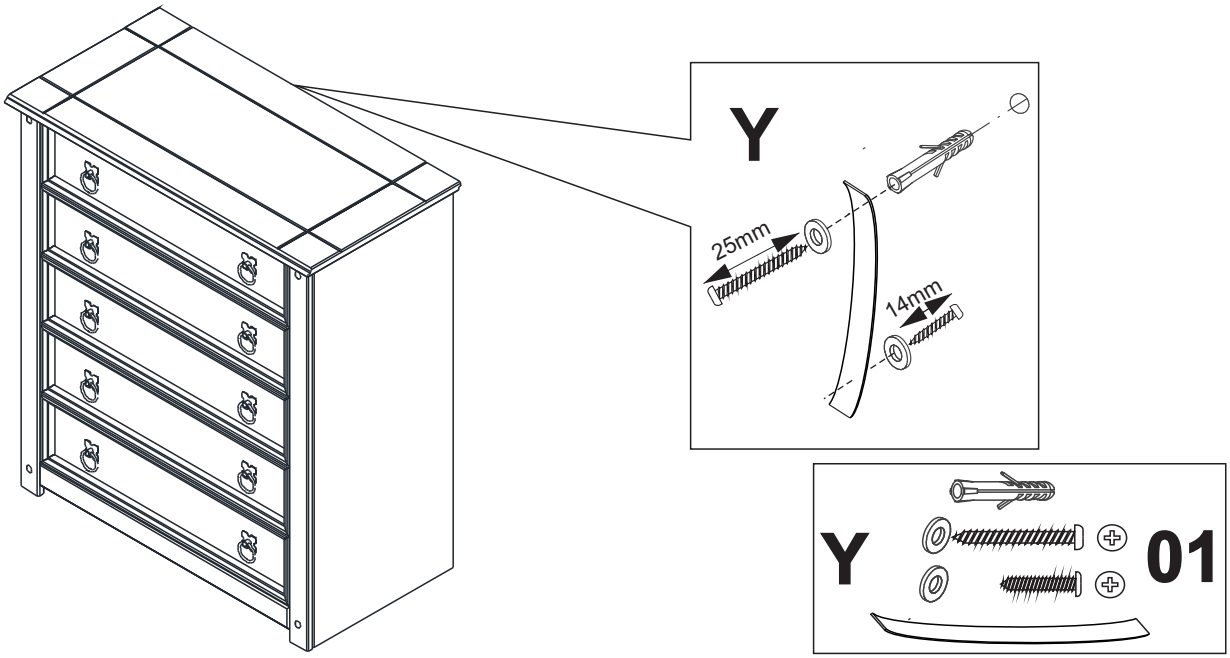

WARNING: CHECK FOR HIDDEN PIPES AND CABLES BEFORE DRILLING.

IMPORTANT: IF YOUR WALLS ARE NOT SOLID LIKE BRICK OR STONE, IT WILL REQUIRE SPECIAL FITTINGS (NOT SUPPLIED).

- Place the fixing strip against the wall and mark the position for drilling hole.

- Drill a hole in the wall to a depth of 30mm by using a 6mm drill bit. If the surface of your wall is soft and crumbly, we would advise you

to use a 5mm drill bit for a tighter fit.

- Insert the wall plug into the hole with end flush to the wall surface.

- Attach fixing strip to the wall using the 25mm screw + washer and securely tighten.

- Pre-drill small pilot hole on the back edge of the furniture top using a 2mm drill bit. Attach the other end fixing strip to the back

edge of the furniture top using the 14mm screw + washer and securely tighten.