Assembly Instruction

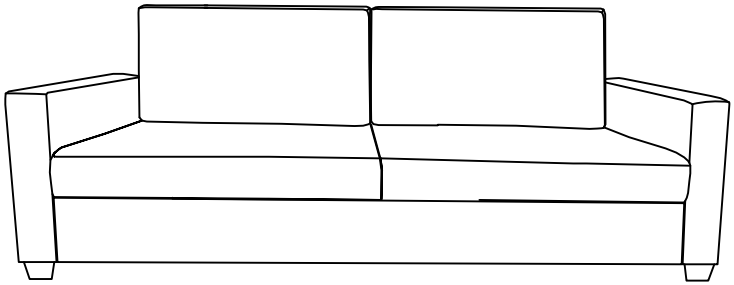

Team Assembly Recommended

Trouble shooting:

Missing / Wrong / Broken parts and installation issues

↓

Send email with your question, pic and order NO. to

↓

Respond within 24 hours

↓

Issue resolved

A	B	B1	C	C1	D	E	F	G	G1	H	H1	I
2PCS	1PC	1PC	1PC	1PC	2PCS	1PC	1PC	1PC	4PCS	1PC	1PC	2PCS

J	K	L	M	N	O	O1	P
4PCS	M8*90 4PCS	M8*40 3PCS	M8*30 12PCS	M8*20 8PCS	2PCS	2PCS	1PC

Product Diagram

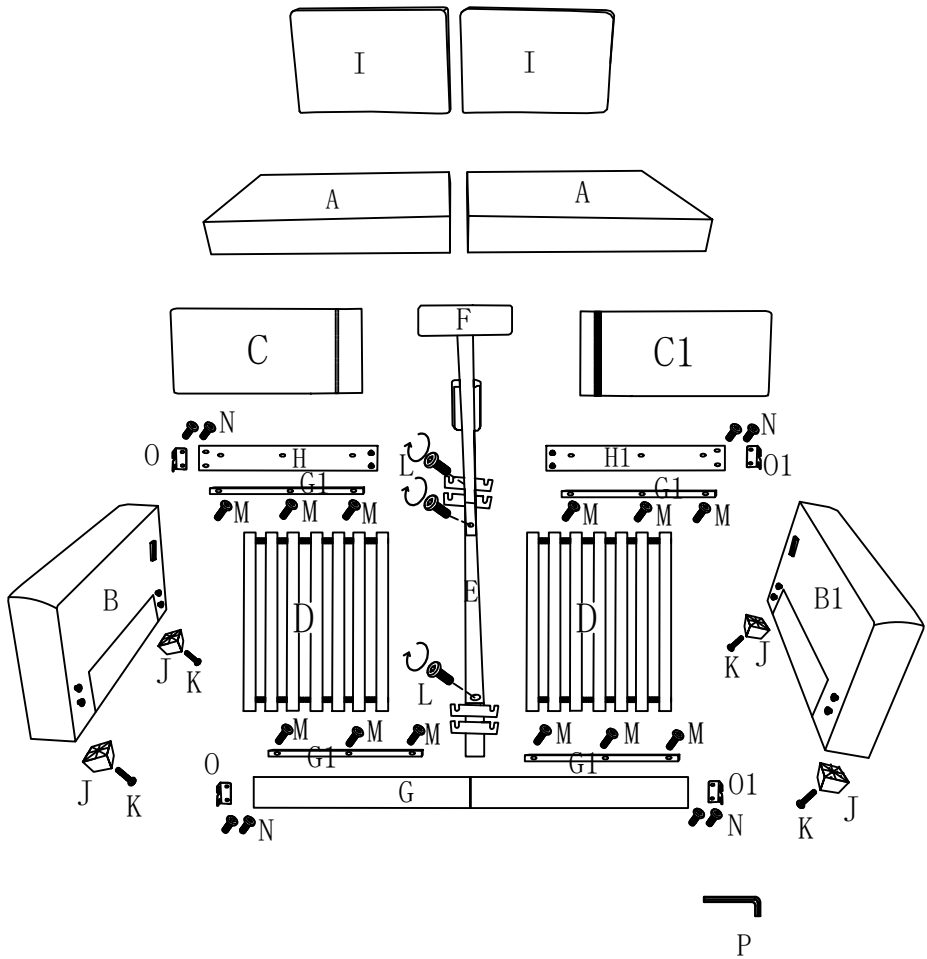

Step1

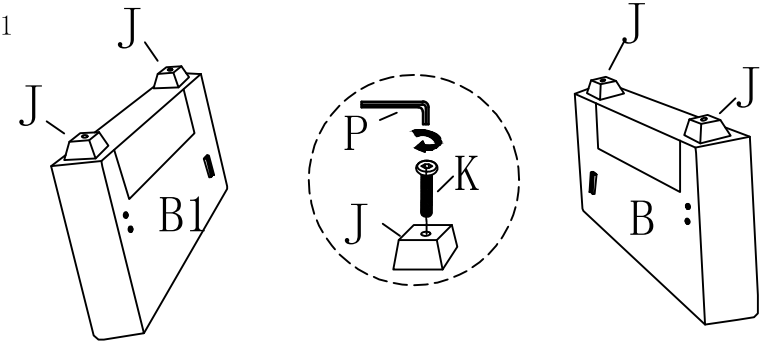

Step2

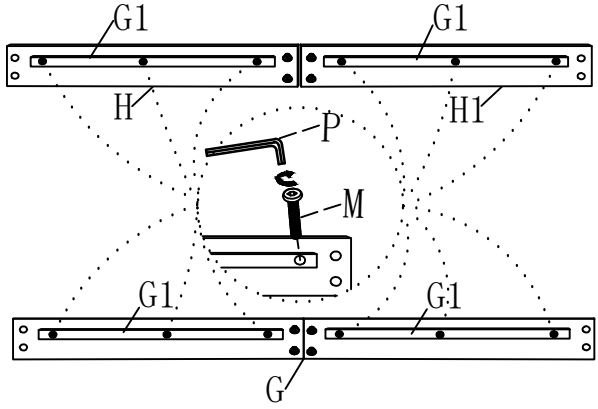

Step3

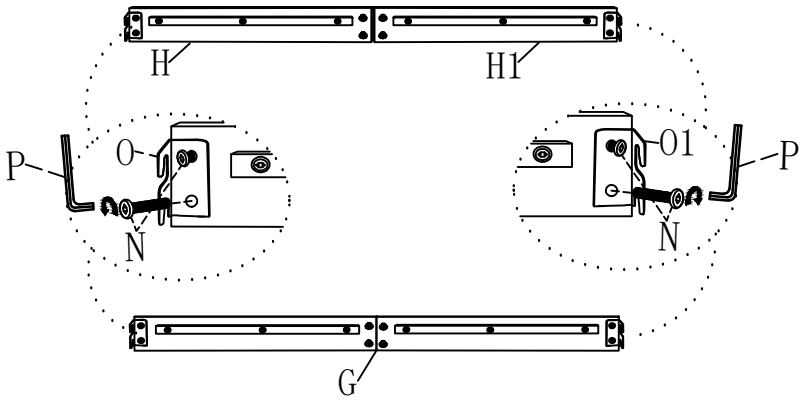

Step4

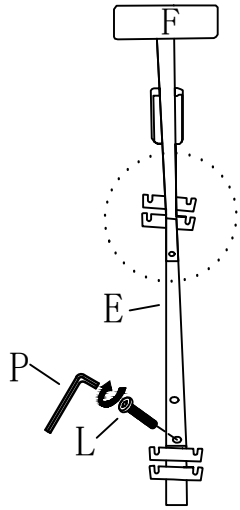

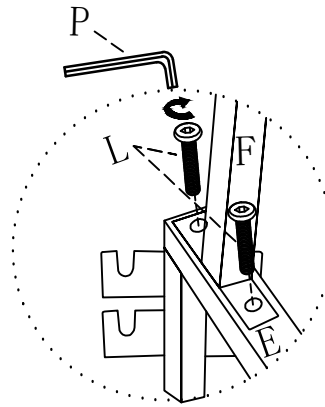

Step5

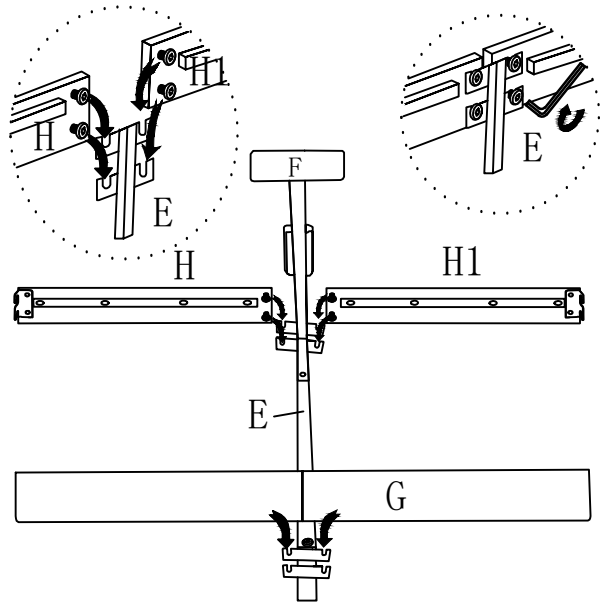

Step6

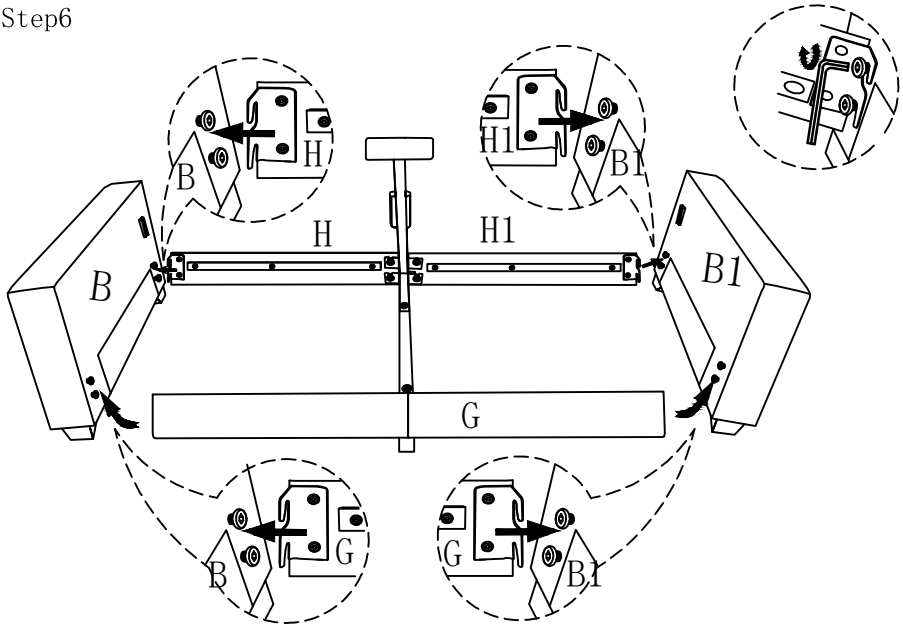

Step7

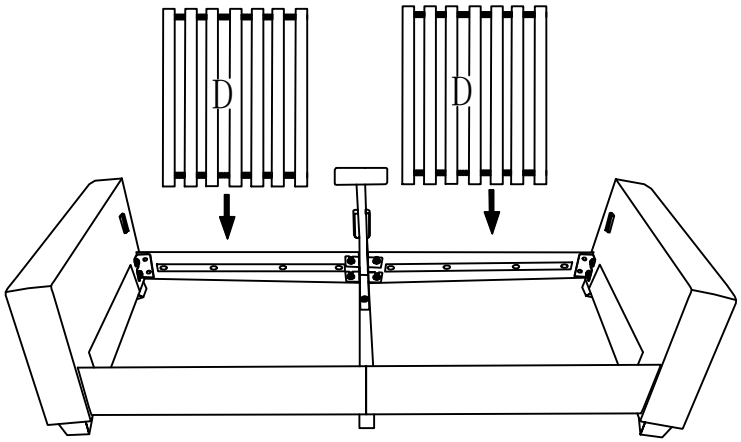

Step8

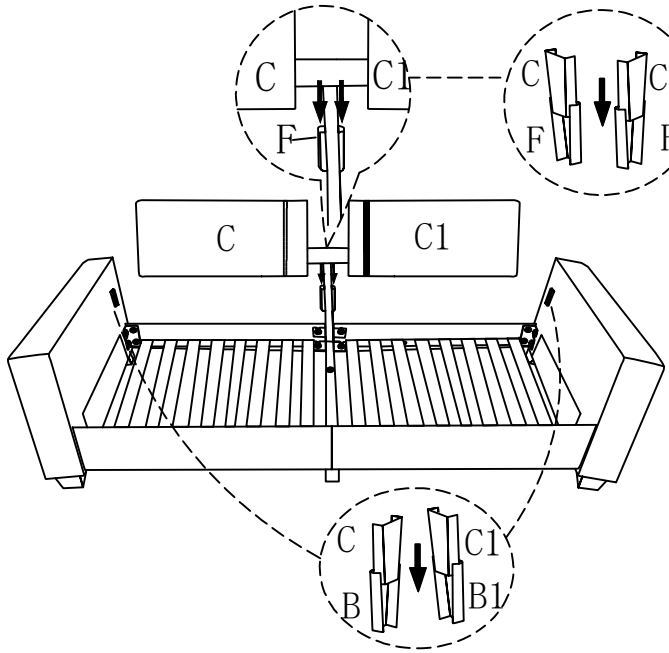

Step9

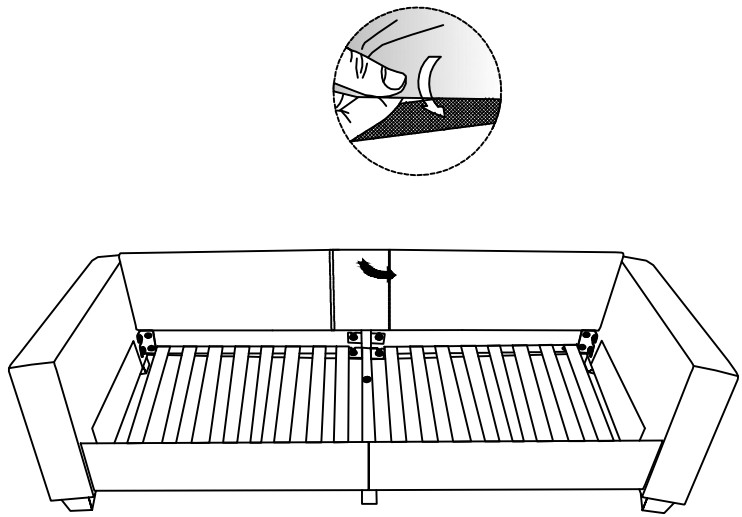

Step10

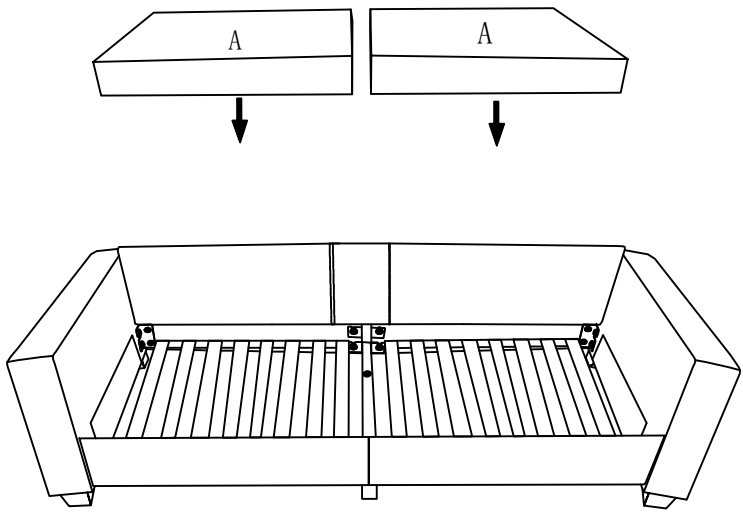

Step11

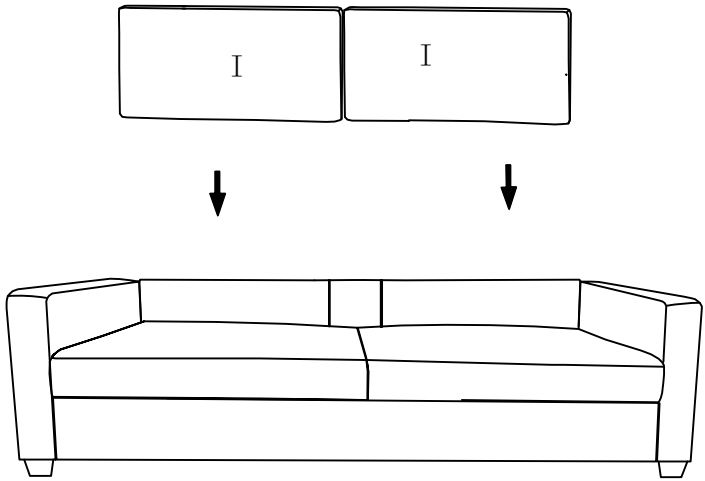

Limited Liability & Warning

No Unauthorized Modifications/Repairs: Do not modify or attempt to repair this product unless you are an authorized technician. Unauthorized actions may create hazards and void all warranties
Misuse & Non-Compliance: We are not liable for any injury, damage, or loss resulting from:
(a) misuse, abuse, neglect, or improper installation;
(b) failure to follow instructions or safety precautions;
(c) use of unauthorized parts/accessories;
(d) unauthorized modifications/repairs;
(e) accidents, natural disasters, or external causes.
If you doubt any step of installation or operation, stop using the product and contact authorized service or the customer support.

LIMITACIÓN DE RESPONSABILIDAD Y ADVERTENCIA

Modificaciones o Reparaciones No Autorizadas: NO modifique ni intente reparar este producto a menos que sea un técnico autorizado. Las acciones no autorizadas pueden generar riesgos y
anularán todas las garantías.
Uso Indebido e Incumplimiento: No asumimos responsabilidad alguna por lesiones, daños o pérdidas que resulten de:
(a) uso indebido, abuso, negligencia o instalación incorrecta;
(b) incumplimiento de las instrucciones o precauciones de seguridad;
(c) uso de piezas o accesorios no autorizados;
(d) modificaciones o reparaciones no autorizadas;
(e) accidentes, desastres naturales o causas externas.
Si tiene dudas sobre algún paso de la instalación o el funcionamiento, deje de usar el producto y póngase en contacto con el servicio técnico autorizado o con atención al cliente.

IMPORTANT SAFETY INFORMATION

Please carefully read the instructions and caution warnings below before assembling the product . Following this guide will ensure that you install, use and maintain the product properly.

- Please keep this installation and user manual/instructions for future reference in case you need to assemble the product.
- Do not assemble if you notice serious damage such as cracks or bends.
- During installation, please use work gloves for hand safety.
- Please assemble the unit on carpeted floor or the flat cardboard box to avoid scratching the surface or your floor while assembling on the floor.
- To assemble, please use the complimentary installation tools (Allen Wrench). Pay more attention to the direction of components at each steps.
- It is recommended that two people work together to assemble the product.
- Please do not tighten the screws up too much, just to 80% before you finish to make the installation go on successfully.

RETURN POLICY

We believe you will absolutely love your new product. But for some reason you want to return your item, please contact us within 30 days after receiving and ensure that the product which you want to return is in a good condition in the original box with all original certificates of purchase, manuals and accessories attached.

HOW TO MAINTAIN YOUR PRODUCT:

- Check the screws of the product are not loose from regular use.
- Do not use sharp instruments, rubbing alcohol, corrosive chemicals, or abrasive cleaners to clean the product.
- Do not keep the product in a damp environment for a long period of time. The damp environment may cause the iron components to rust and the plates to bulge and crack.