LC02-002

Assembly Instruction

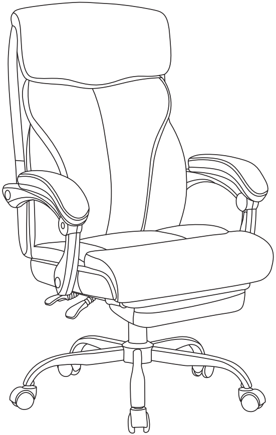

Accessories List

(1) Backrest	(2) Seat Cushion	(3) 2 Armrests	(4) Air Rod	(5) Base Plate
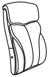	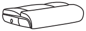	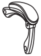	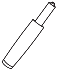	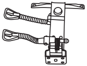
(6) Split Base Tube	(7) Central Base Tube	(8) 5 Castors	(9) Footrest	(10) 2 Footslide Rails
	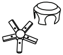	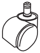	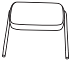	
(11) Backrest Plate	(12) 4 Screws (M6*18mm)	(13) 5 Screws (M6*20mm)	(14) 4 Screws (M6*20mm)	(15) 4 Screws (M6*25mm)
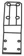				
(16) 4 Screws (M8*20mm)	(17) 4 Screws (M8*40mm)	(18) 1 Screw (M5*8mm)	(19) 4 Gaskets	(21) Hexagon Wrench
			 (20) 4 Covers 	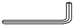

Warning

Please check if the quantity of product part is complete. You can make a reference to the above accessories list. If there're any broken or wrong parts, please kindly contact us to exchange.

Notice

- This is a single chair, so please do not seat 2 or more persons
- Do not stand on the chair
- Do not sit reverse or sit outside of the seat cushion
- Check the screws once every 6 months, to make sure the screws are tight.
- Do not use the chair when the screws are loose
- *It is important to assemble all parts so that the directional "Arrows" point in the same direction.Make certain that all screws are FULLY tightened before using the chair.

Assembly Instruction

Please assemble in a wide and flat place.

Step 1

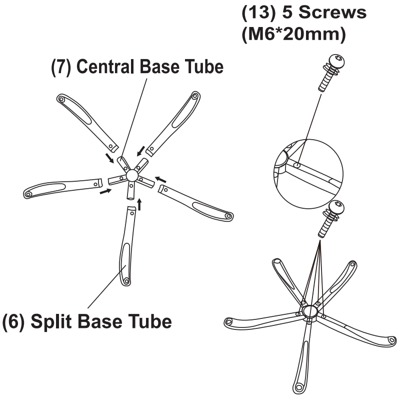
(13) 5 Screws
(M6*20mm)
(7) Central Base Tube
(6) Split Base Tube

Step 2

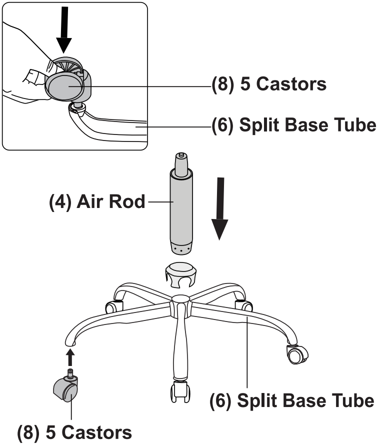
(8) 5 Castors
(6) Split Base Tube
(4) Air Rod
(6) Split Base Tube
(8) 5 Castors

Step 3

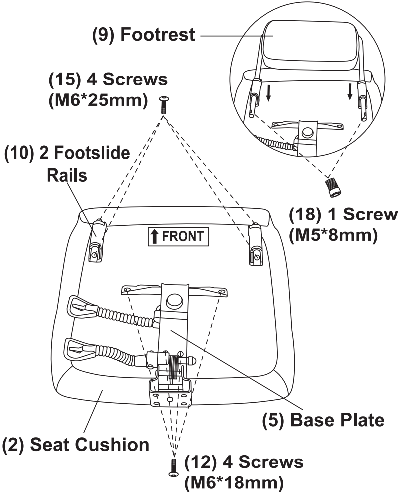
(9) Footrest
(15) 4 Screws
(M6*25mm)
(10) 2 Footslide
Rails
FRONT
(18) 1 Screw
(M5*8mm)
(5) Base Plate
(2) Seat Cushion
(12) 4 Screws
(M6*18mm)

Step 4

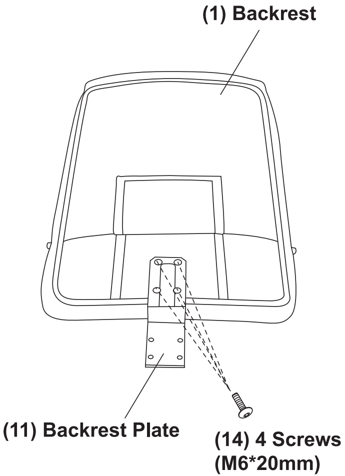
(1) Backrest
(11) Backrest Plate
(14) 4 Screws
(M6*20mm)

Step 5

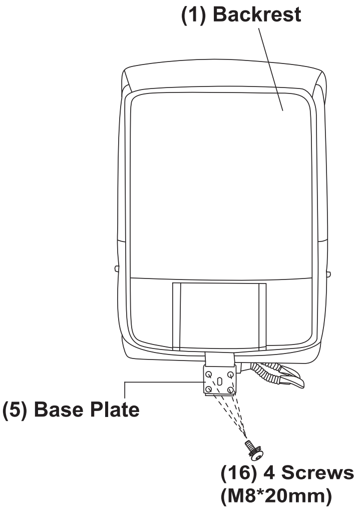
(1) Backrest
(5) Base Plate
(16) 4 Screws
(M8*20mm)

Step 6

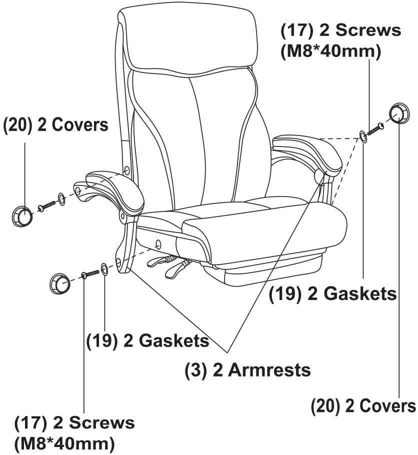
(17) 2 Screws
(M8*40mm)
(20) 2 Covers
(19) 2 Gaskets
(19) 2 Gaskets
(3) 2 Armrests
(20) 2 Covers
(17) 2 Screws
(M8*40mm)

Step 7

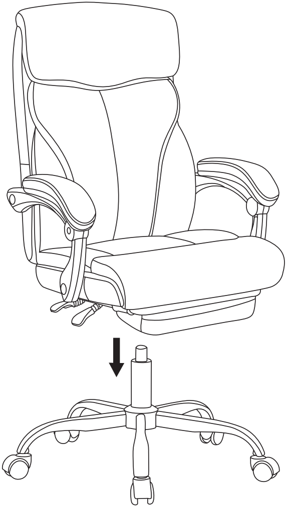

Step 8

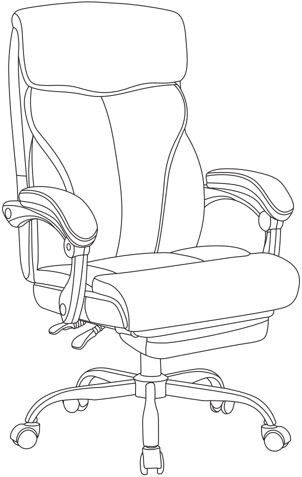

WARRANTY

3-YEAR Warranty Program

1. For a period of one (3) years after date of purchase, the Manufacturer will either repair or replace defective components in accordance with this Limited Warranty. This warranty is between the Manufacturer and the original purchaser and is valid only when accompanied by the original purchaser's sales receipt showing original date of purchase and location of purchase.Replacements under this warranty revert back to the date of original purchase for future warranty.

2. The manufacturer or its authorized dealer can accept or reject warranty claims based on its findings. This warranty applies in normal residential use only and is not intended for commercial use. The Manufacturer can make substitutions as required of materials, components, and sub-components of comparable value and utility. This warranty is limited to product repair or replacement (to be determined solely by the Manufacturer). Warranty return is limited to only the single affected component.

3. This limited warranty covers only manufacturing defects and does not cover normal wear and tear, damage due to acts of nature (such as, but not limited to freezing or high winds), abuse or misuse, including chemical damage from suntan oil or other chemicals, exposure to extreme heat or cold, abrasion or excessive weight. This product is intended to be used in standard installations only. This warranty is void if the product is not used for its intended purpose. The Manufacturer disclaims liability for any aspect of installation and any inconvenience caused by a defective part of a component.

HELP CENTER

Question about your product?

We are here to help, contact us by

chairaftersales@outlook.com

24/7
Support Service
Email