# ASSEMBLY INSTRUCTIONS

# QUEEN MURPHY BED WITH DRAWER

TYPE 1

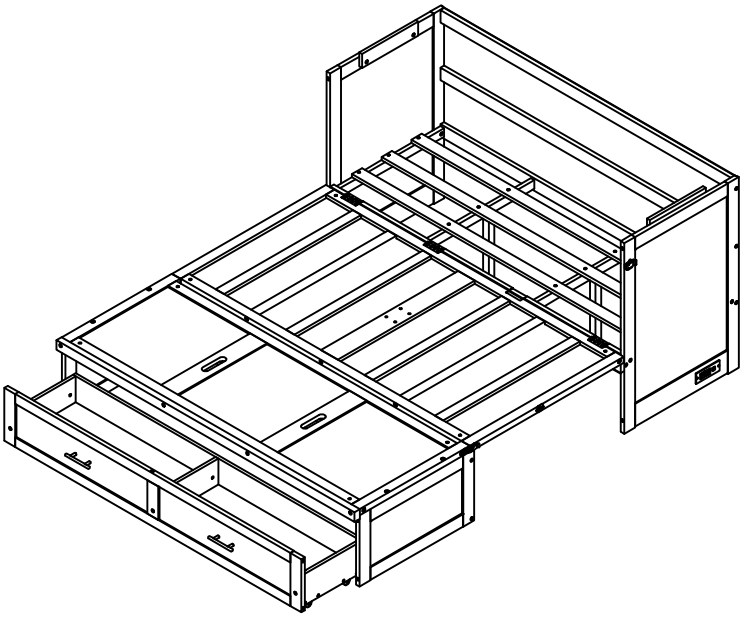

TYPE 2

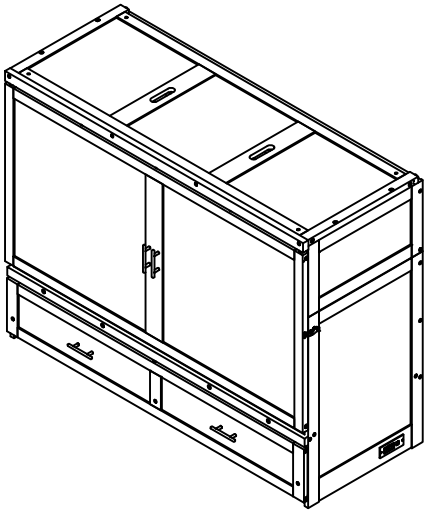

**SA33873**

# Detail View

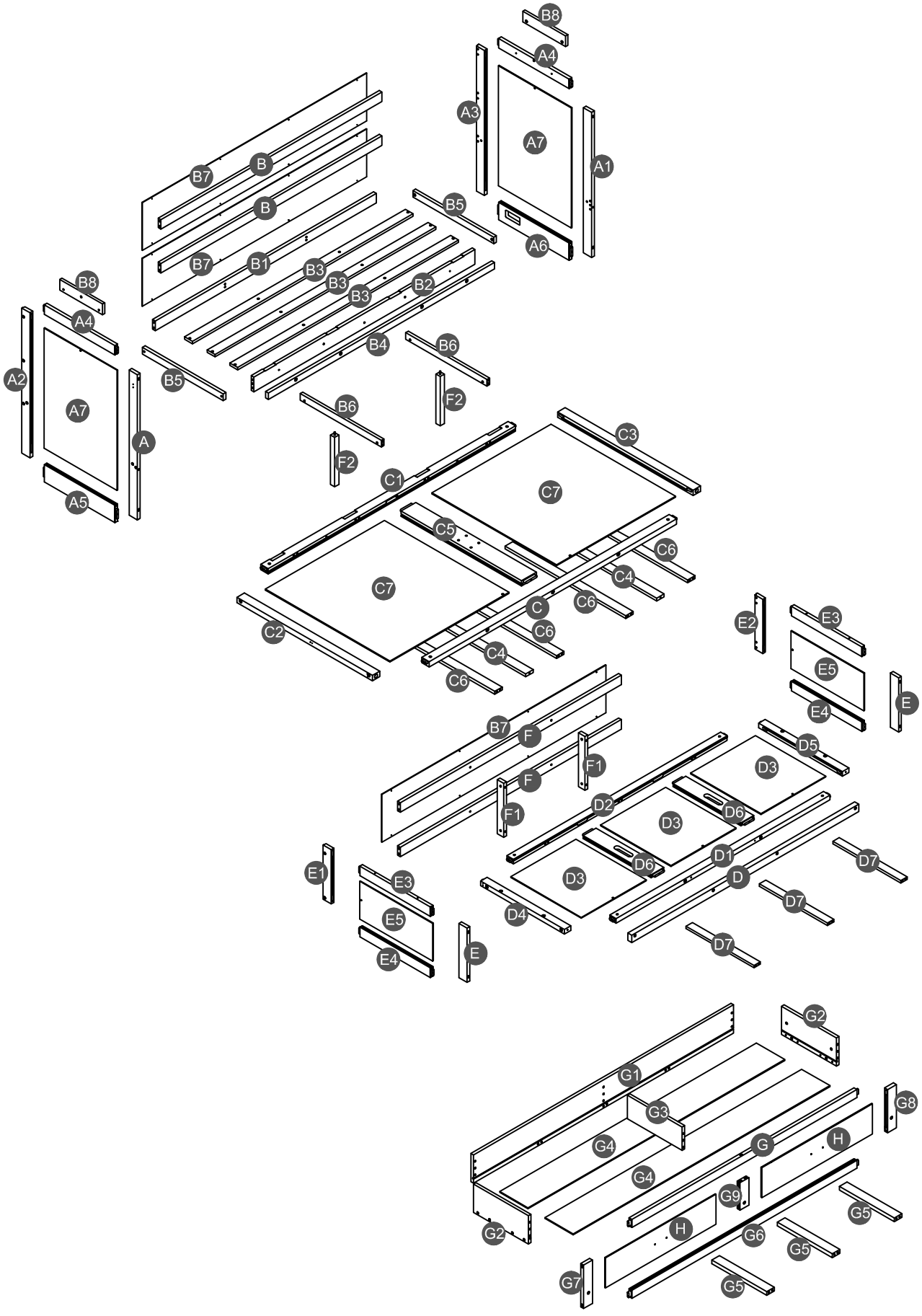
B8
A4
A3
A7
A1
B7
B
B
B5
A6
B7
B1
B3
B3
B3
B2
B8
A4
B4
B6
A2
B5
A7
F2
B6
A
F2
C3
C1
C7
A5
C5
C6
C4
C7
C
C6
C2
C6
C4
C6
E2
E3
E5
E
E4
B7
F
D5
F1
D3
F
D2
D6
F1
D3
D1
D7
E1
D6
D3
D
E3
D7
E5
D4
E4
E
D7
G2
G1
G8
G3
G4
G
H
G4
G9
G5
G2
H
G6
G5
G7
G5

# Part list (Box 1 - SA33873 (1-2))

| | | |
|---|---|---|
| **A** 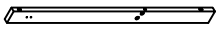 Vertical bar HB (left front) -1pc | **A1** 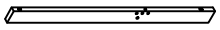 Vertical bar HB (right front) -1pc | **A2** 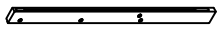 Vertical bar HB (left back) -1pc |
| **A3**  Vertical bar HB (right back) -1pc | **A4** 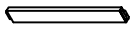 Upper horizontal bar HB- 2pcs | **A5**  Lower horizontal bar HB (left) -1pc |
| **A6**  Lower horizontal bar HB (right) -1pc | **B** 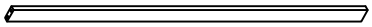 Upper horizontal bar HB - 2pcs | **B1** 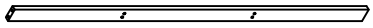 Lower horizontal bar HB -1pc |
| **B2** 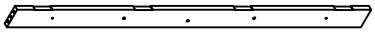 Horizontal bar HB (front) - 1pc | **B3** 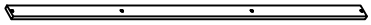 Slat - 3pcs | **B4**  Support HB (front) - 1pc |
| **B5**  Horizontal bar HB (left/right) - 2pcs | **B6**  Lower support slat - 2pcs | **B7** 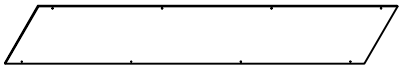 Back panel HB/FB - 3pcs |
| **B8** 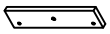 Support HB - 2pcs | **C** 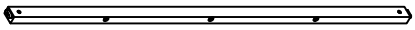 Horizontal bar (front) - 1pc | **C1**  Horizontal bar (back) - 1pc |
| **D** 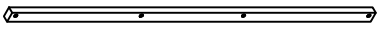 Support FB (front) - 1pc | **D1** 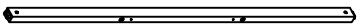 Horizontal bar FB (front) - 1pc | **D2**  Horizontal bar FB (back) - 1pc |
| **D6**  Divider horizontal bar FB - 2pcs | **E**  Vertical bar FB (left/right) - 2pcs | **E1**  Vertical bar FB (left back) -1pc |
| **E2**  Vertical bar FB (right back) -1pc | **E3** 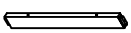 Upper horizontal bar FB- 2pcs | **E4** 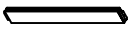 Lower horizontal bar FB - 2pcs |
| **E5** 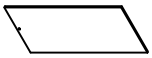 Side panel FB - 2pcs | **F** 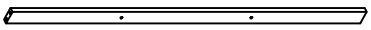 Upper horizontal bar FB - 2pcs | **F1**  Vertical bar support FB -2pcs |

| | | |
|---|---|---|
| **F2**  Leg support - 2pcs | **G**  Upper horizontal bar front drawer - 1pc | **G1**  Back drawer panel - 1pc |
| **G2** 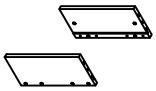 Left / right drawer panel - 2pcs | **G3**  Divider drawer panel - 1pc | **G4** 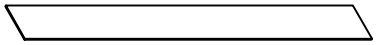 Drawer bottom - 2pcs |
| **G6**  Lower horizontal bar front drawer - 1pc | **G7**  Vertical bar front drawer (left)- 1pc | **G8**  Vertical bar front drawer (right)- 1pc |
| **G9**  Mid vertical bar front drawer - 1pc | **H** 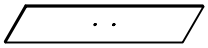 Front drawer panel - 2pcs | |

# Part list & Hardware list (Box 2 - SA33873 (2-2))

| | | |
|---|---|---|
| **A7** 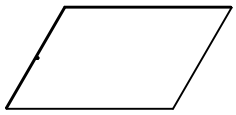 Side panel HB - 2pcs | **C2** 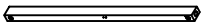 Horizontal bar (left) - 1pc | **C3**  Horizontal bar (right) - 1pc |
| **C4** 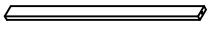 Horizontal bar - 2pcs | **C5**  Mid horizontal bar support - 1pc | **C6**  Horizontal bar support - 4pcs |
| **C7** 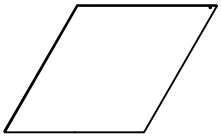 Side panel - 2pcs | **D3** 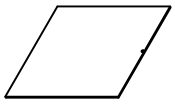 Side panel FB - 3pcs | **D4** 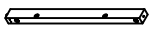 Horizontal bar FB (left) - 1pc |
| **D5**  Horizontal bar FB (right) - 1pc | **D7**  Horizontal bar support - 3pcs | **G5**  Support drawer - 3pcs |

# Hardware List (Box 2 - SA33873 (2-2))

| | | |
|---|---|---|
| **1**  Ø10*20mm<br>Wood dowel (6pcs) | **2** 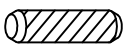 Ø8*30mm<br>Wood dowel (75pcs) | **3** 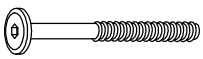 (Ø15)1/4"*80mm<br>Hex-Head bolts (10pcs) |
| **4**  (Ø12)1/4"*60mm<br>Hex-Head bolts (24pcs) | **5**  (Ø12)1/4"*35mm<br>Hex-Head bolts (4pcs) | **6**  (Ø12)1/4"*65mm<br>Hex-Head bolts (32pcs) |
| **7**  (Ø12)1/4"*40mm<br>Hex-Head bolts (8pcs) | **8**  (Ø12)1/4"*30mm<br>Hex-Head bolts (6pcs) | **9**  1/4"*15 (9.5mm)<br>Horizontal-Hole bolts(34pcs) |
| **10** 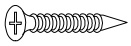 Ø4*30mm<br>Wood screws (20pcs) | **11**  Ø3.5*15mm<br>Wood screws (34pcs) | **12** 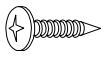 Ø3*12mm<br>Wood screws (24pcs) |
| **13**  Ø3.5*19mm<br>Wood screws (36pcs) | **14** 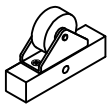 100*52*20 mm<br>Wheels (4pcs) | **15**  45*20*33 mm<br>Wheels (2pcs) |
| **16** 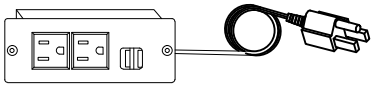 125*47*43mm<br>Power outlet (1pc) | **17** 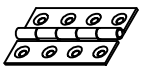 76*42*2mm<br>Hinger (4pcs) | **18**  60*28*15mm<br>Metal bracket (4sets) |
| **19** 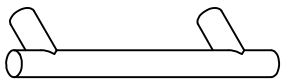 125*33*10mm<br>Handle (4pcs) | **20**  5/32"*10mm<br>Ph zinc(Knob) (4pcs) | **21**  (1/4")4.5*58mm<br>Allen key (1pc) |
| **22** 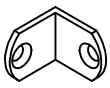 21*17*17*2mm<br>Metal bracket (6pcs) | **23**  Ø9*32mm<br>Plastic anchor (2pcs) | **24** 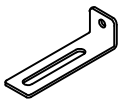 58*16*16*(1.5mm)<br>Metal bracket (2pcs) |
| **25**  Ø4*38mm<br>Wood screws (2pcs) | **26**  5/32"*15mm<br>Ph zinc(Knob) (4pcs) | |

OPTIONAL TOOLS FOR ASSEMBLY (NOT INCLUDED)

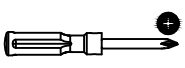
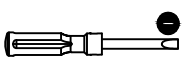

Electric Screwdriver

PLEASE BE CAREFUL DO NOT DAMAGE THE HOLE POSITION WHEN YOU USE POWER TOOLS !

# STEP 1:

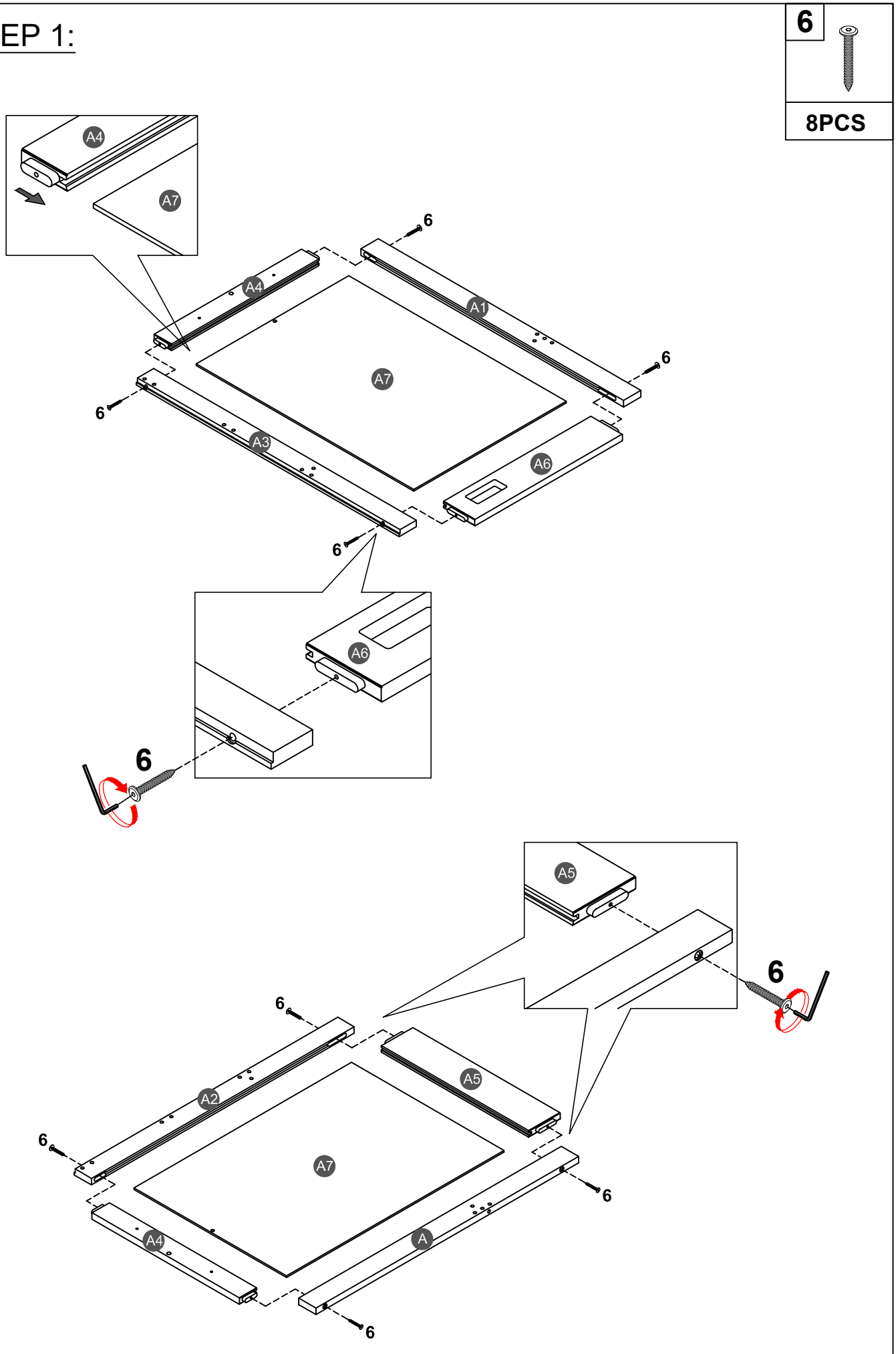

## STEP 2:

| 5 |
|---|
| 4PCS |

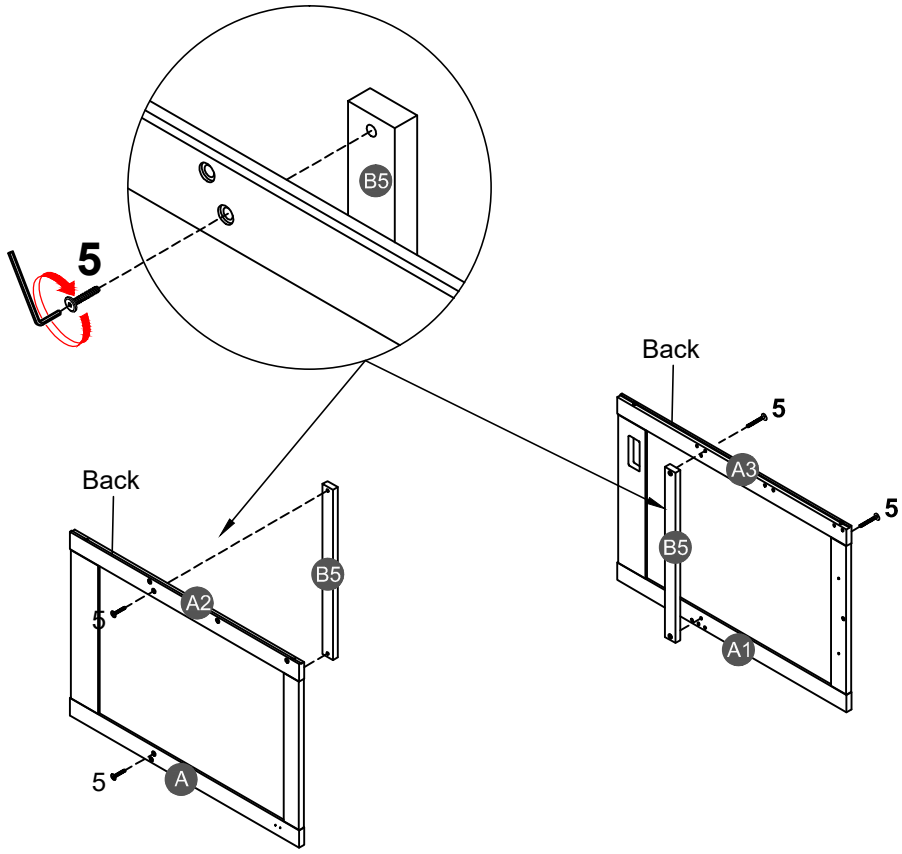


## STEP 3:

| 2 | 4 | 9 |
|---|---|---|
| 2PCS | 2PCS | 2PCS |

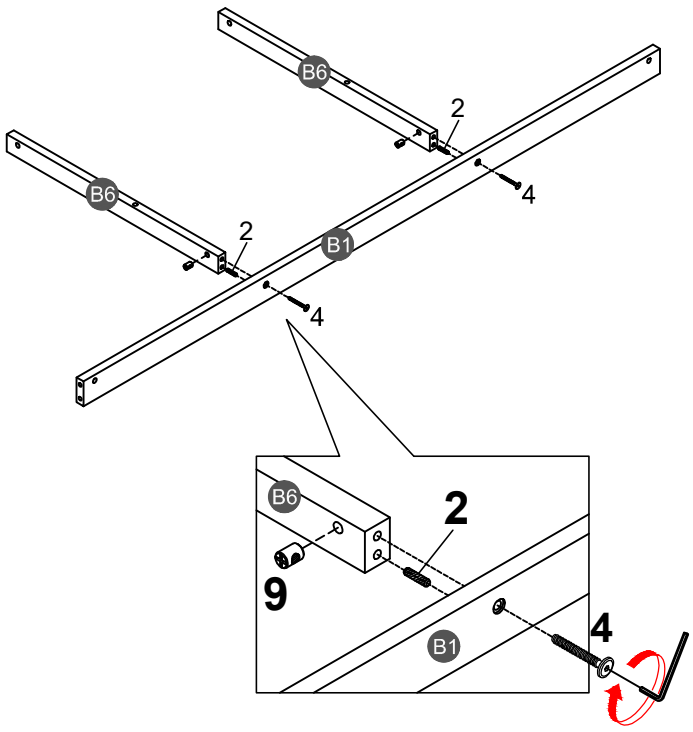

## STEP 4:

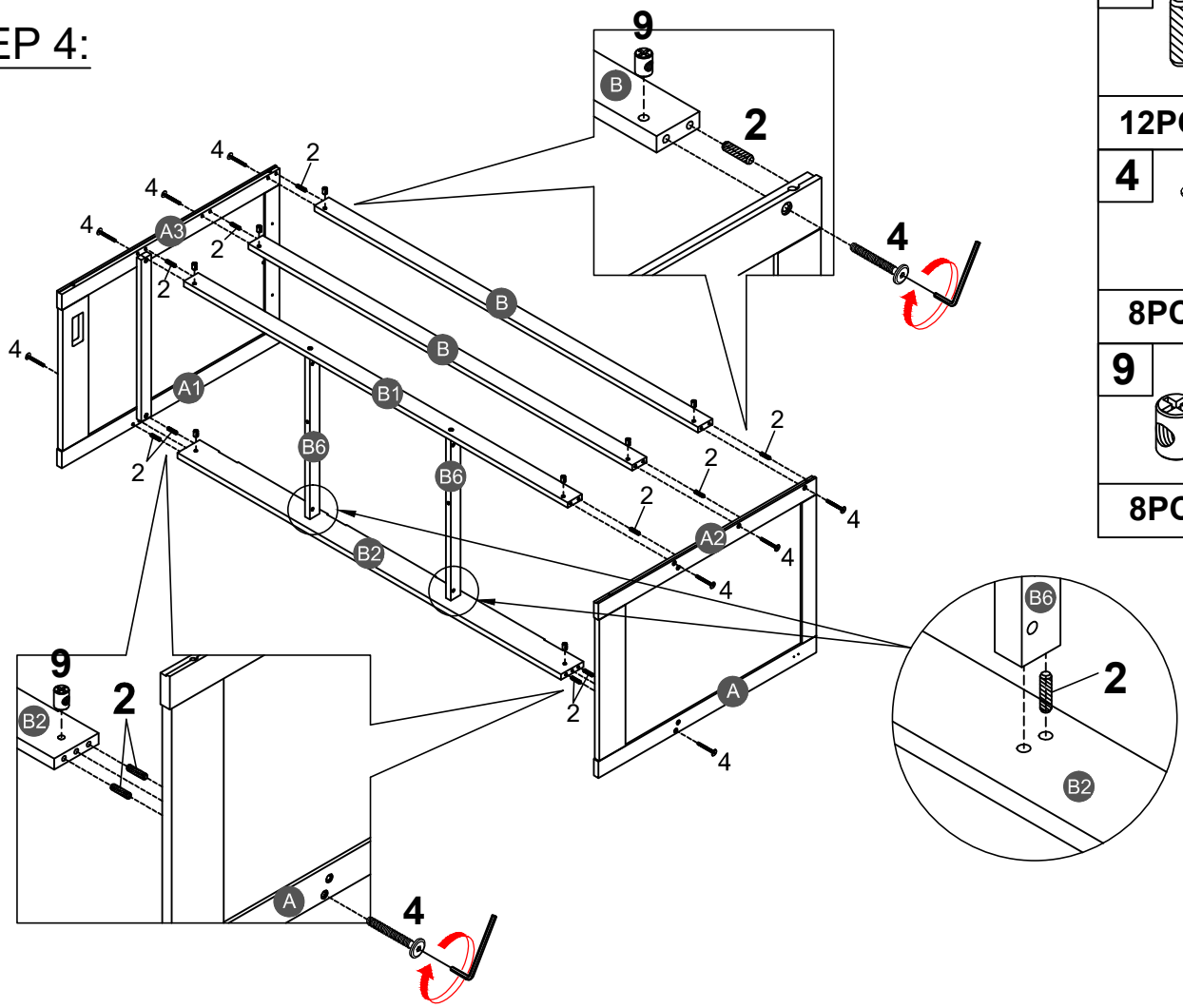


| | |
|---|---|
| 2 | 12PCS |
| 4 | 8PCS |
| 9 | 8PCS |

## STEP 5:

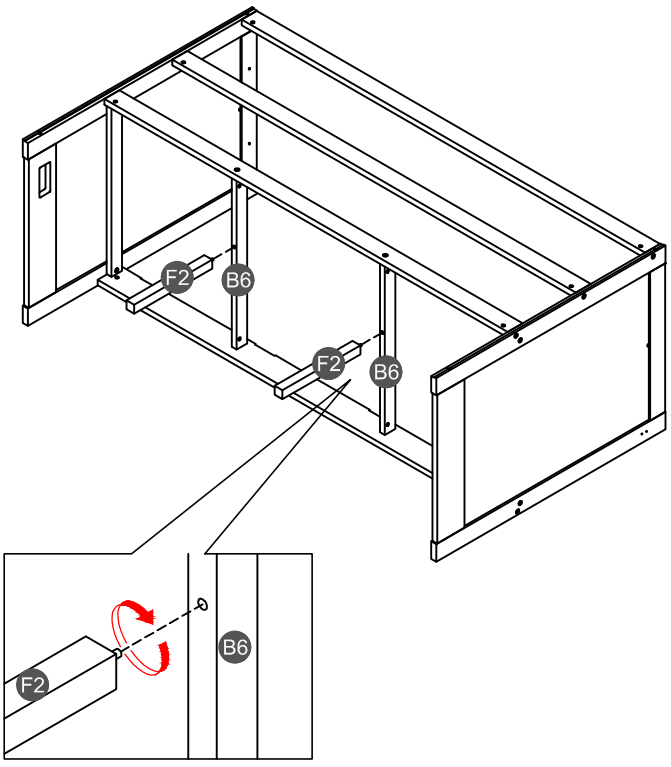

## STEP 6:

| 1 | 8 |
|---|---|
| 2PCS | 4PCS |

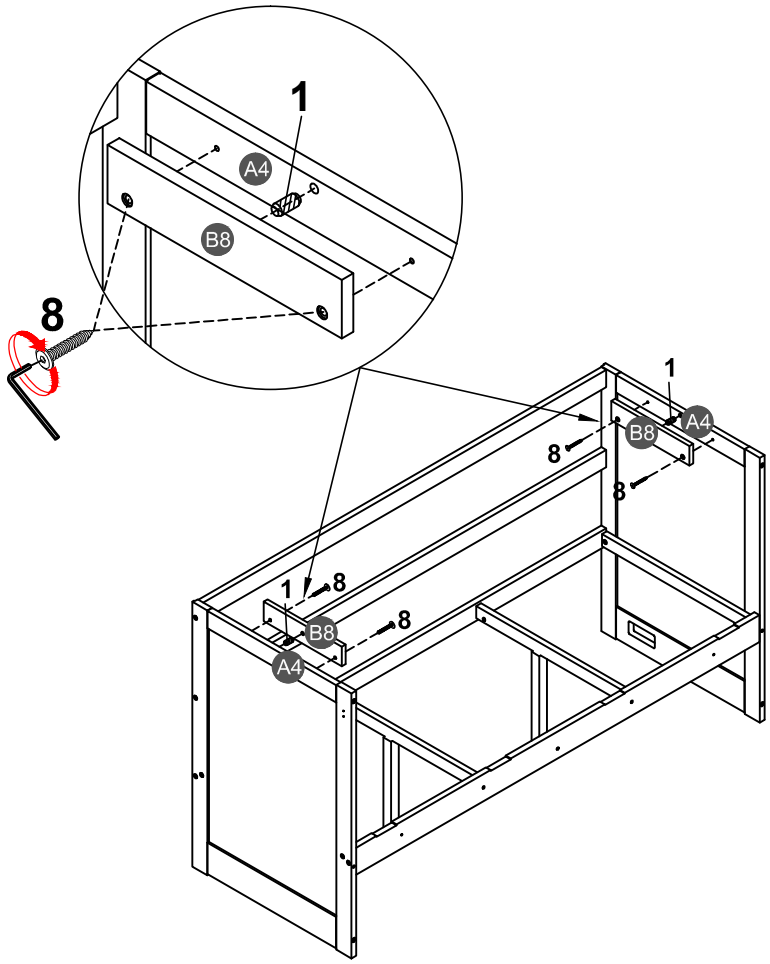


## STEP 7:

| 2 | 8 | 3 | 9 |
|---|---|---|---|
| 3PCS | 2PCS | 2PCS | 2PCS |

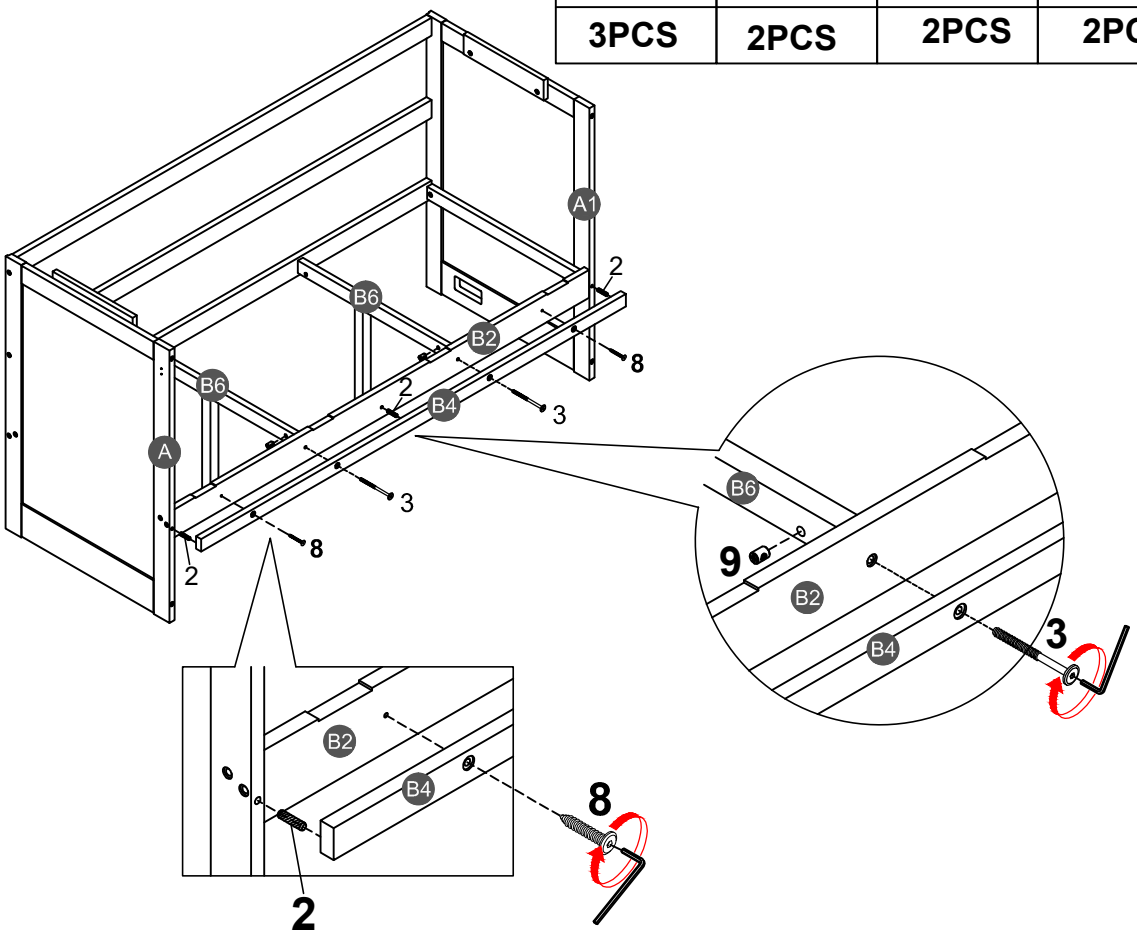

## STEP 8:

10

12PCS

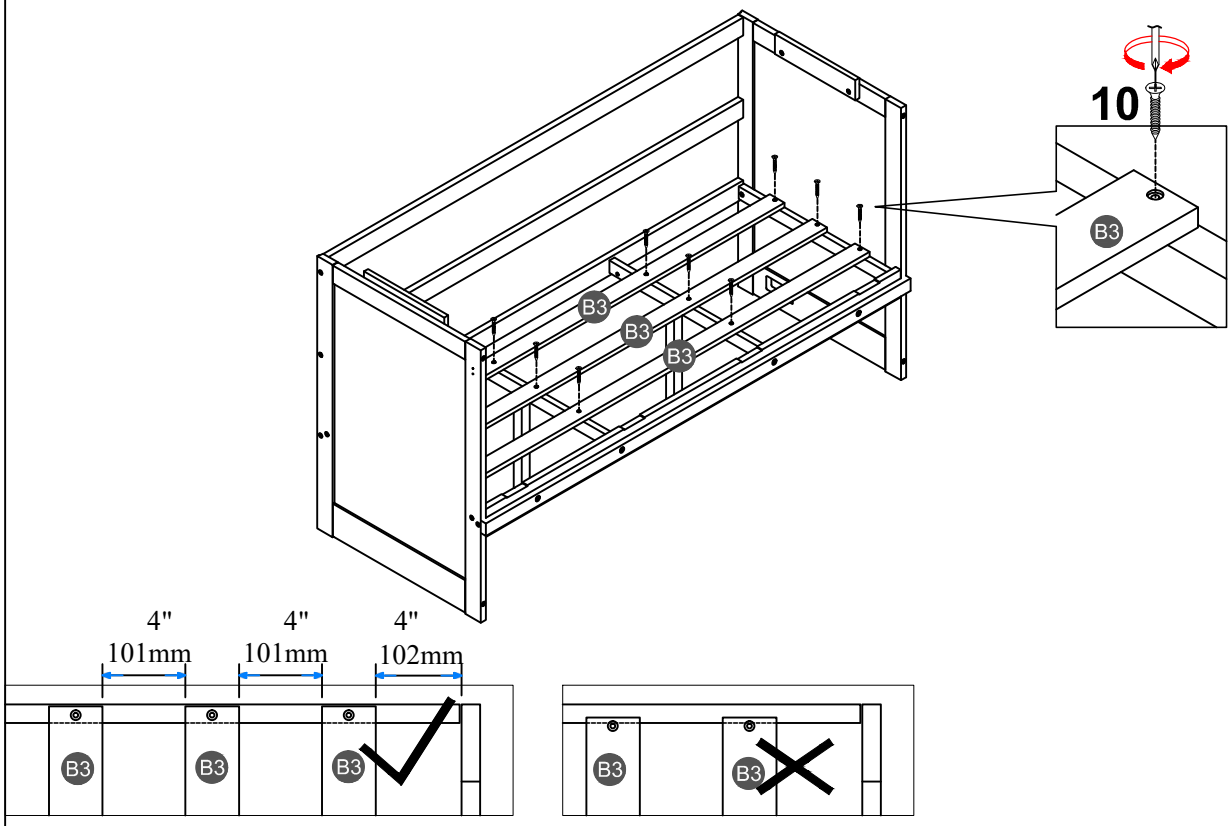


**NOTE:** Please make sure the bed slats close to the side rail before locking the screws to avoid breakage. This step is required for both the left and right sides. Moreover, please do not lock the screws of the bed slats at the outermost edge to avoid damaging.

## STEP 9:

12

16PCS

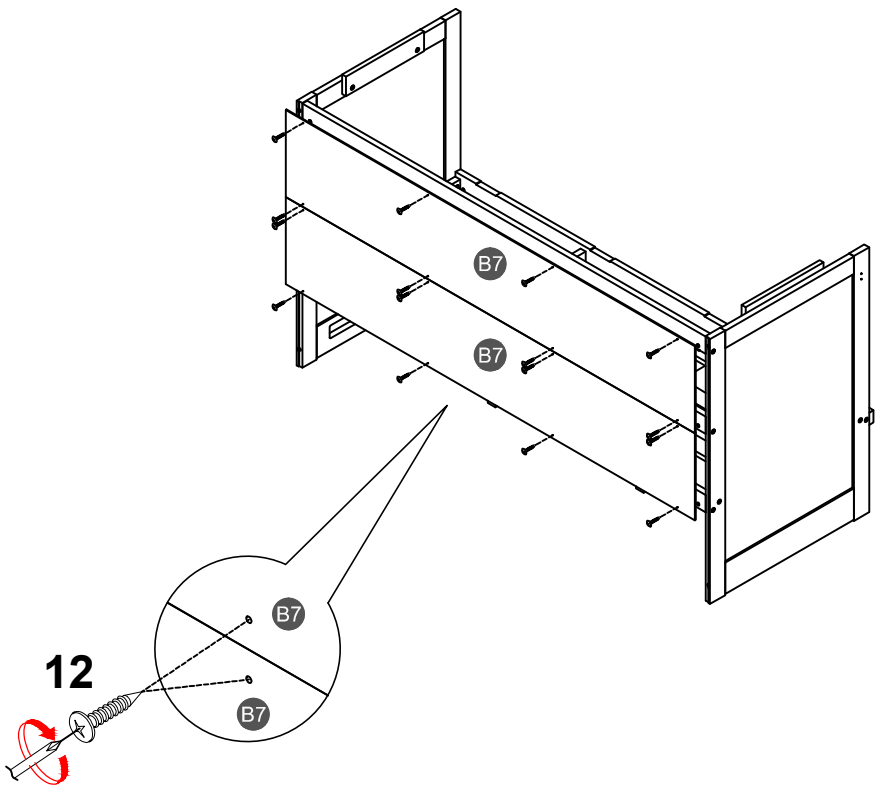

## STEP 10:

| 11 | 16 | 18 |
|---|---|---|
| 6PCS | 1PC | 2PCS |

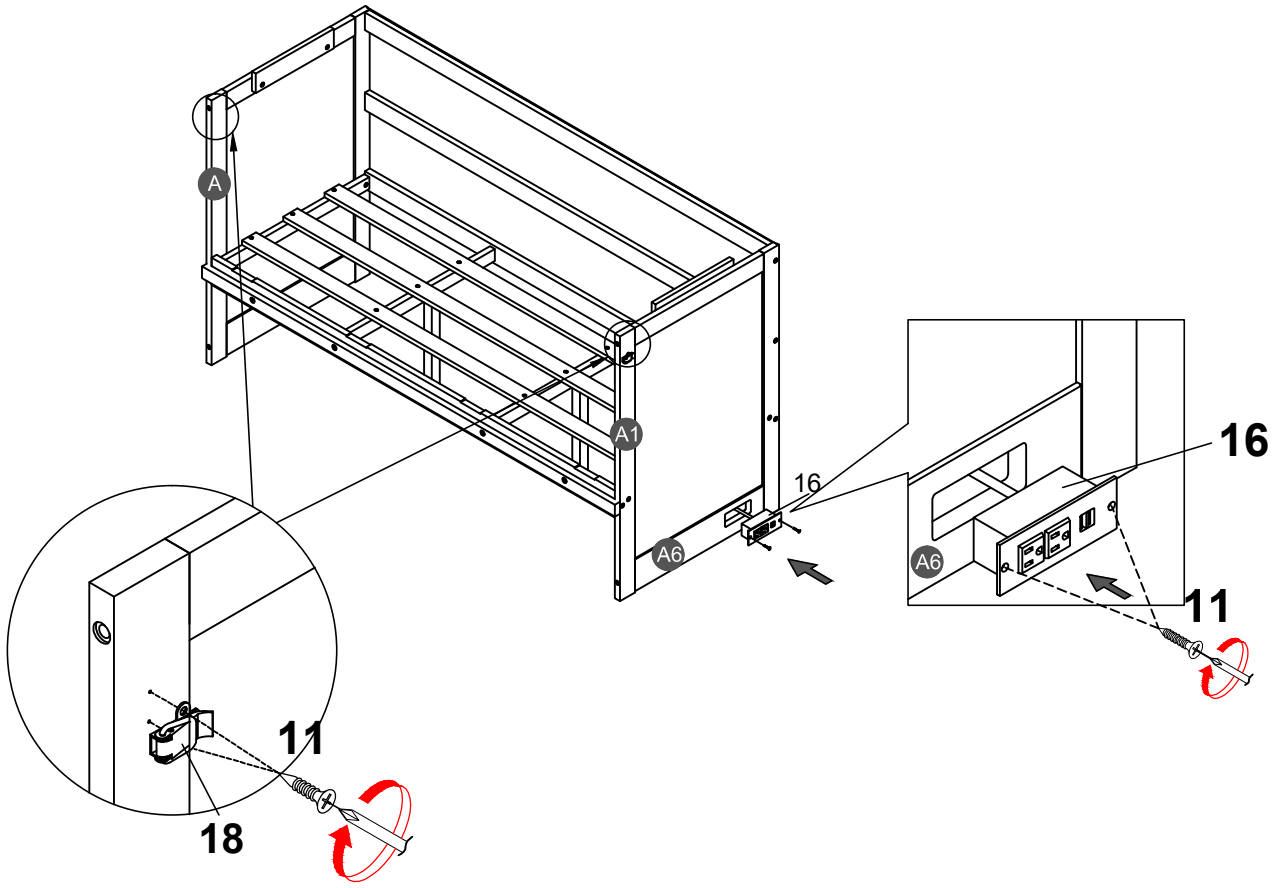


## STEP 11:

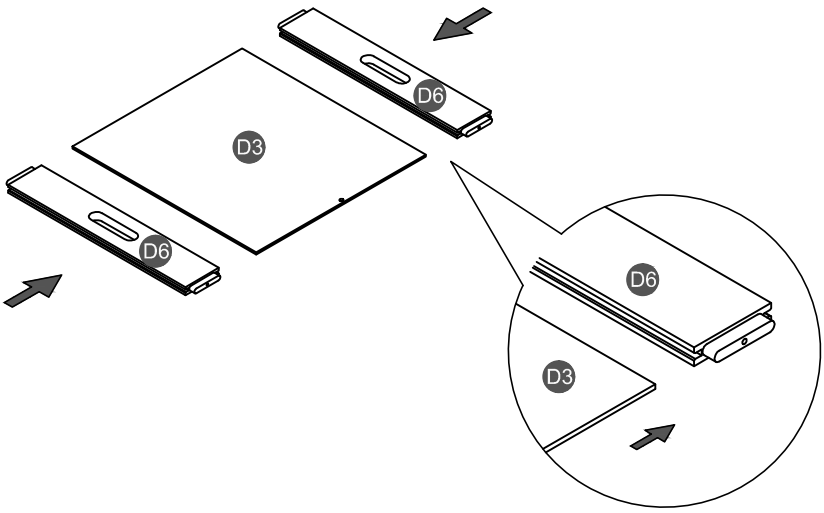

## STEP 12:

| 2 | 6 |
|---|---|
| 12PCS | 4PCS |

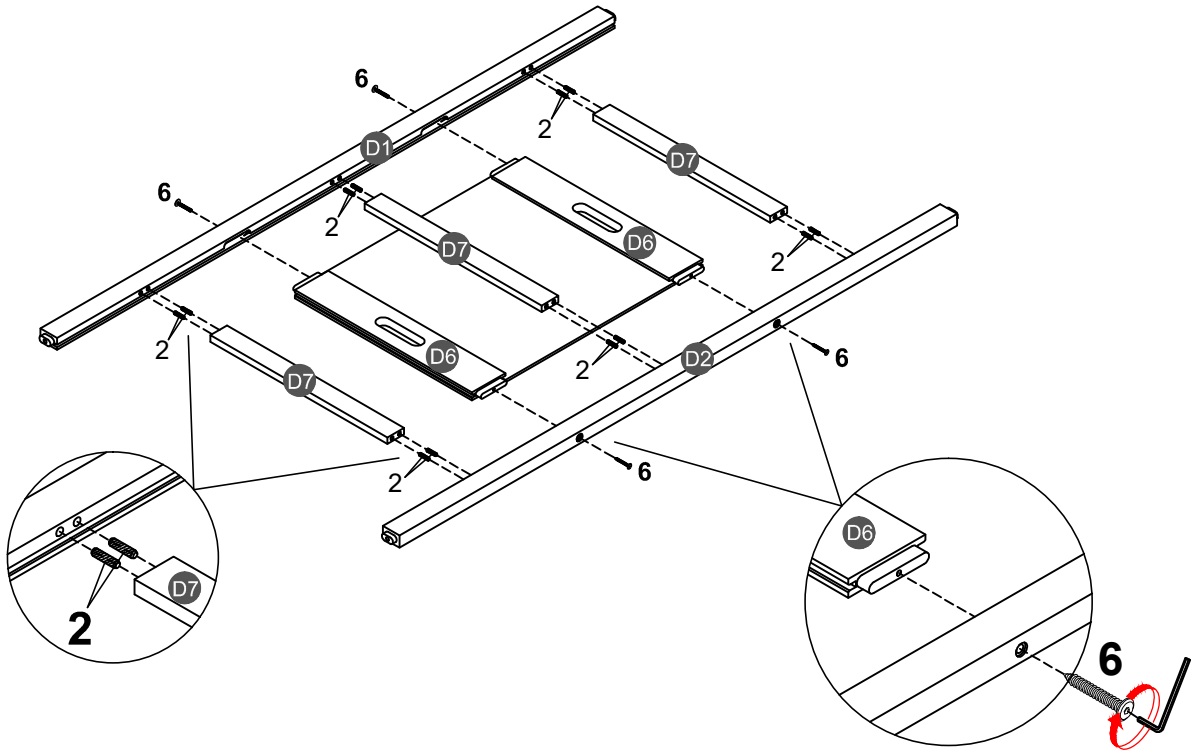


## STEP 13:

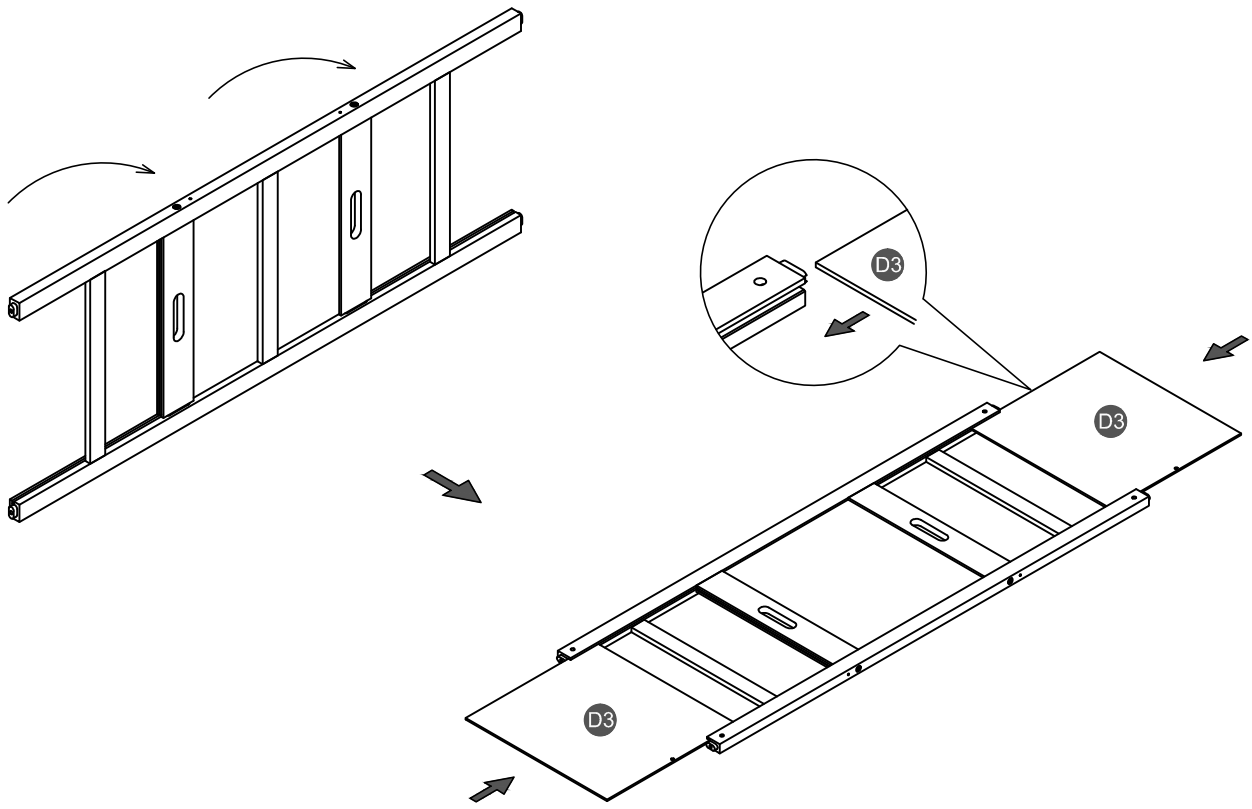

# STEP 14:

| 3 | 9 |
|---|---|
| 4PCS | 4PCS |

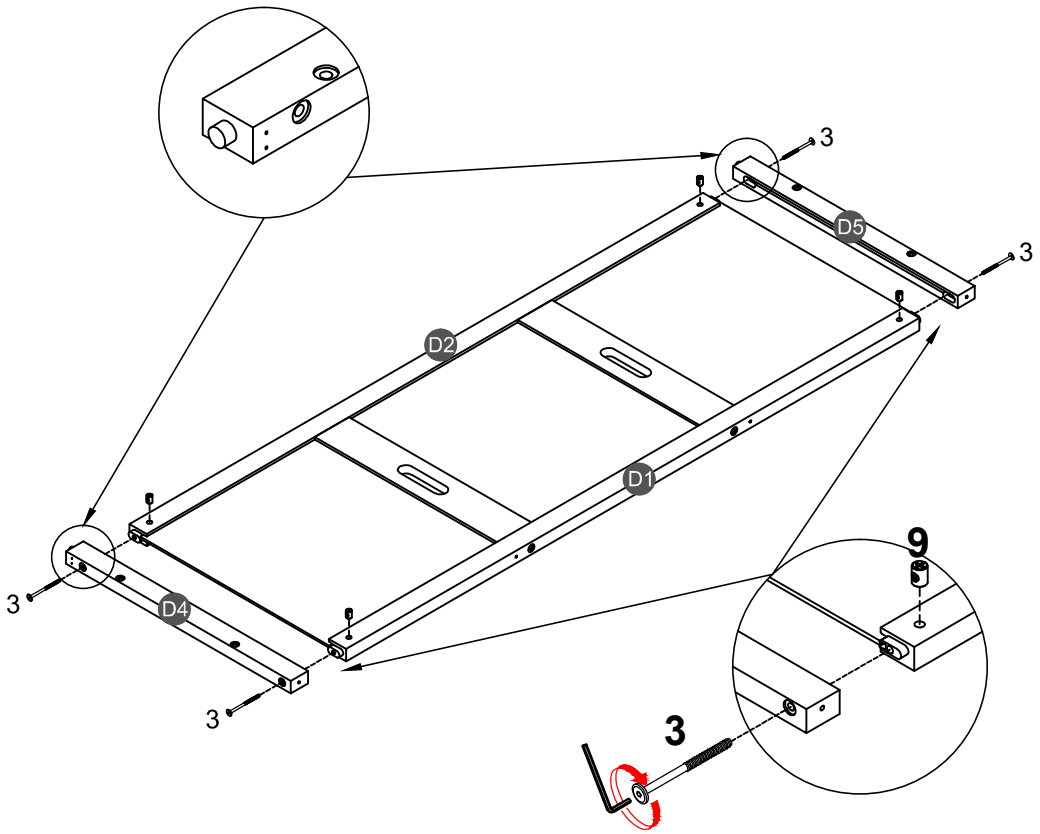


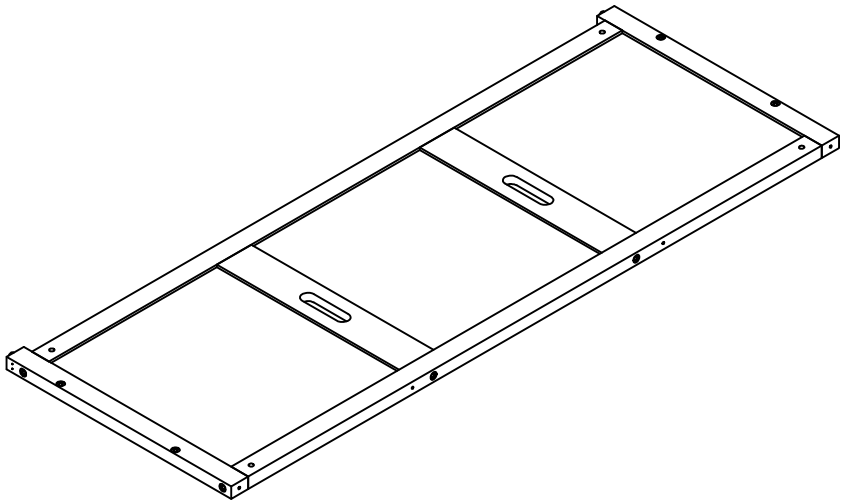

## STEP 15:

| 6 |
| --- |
| 8PCS |

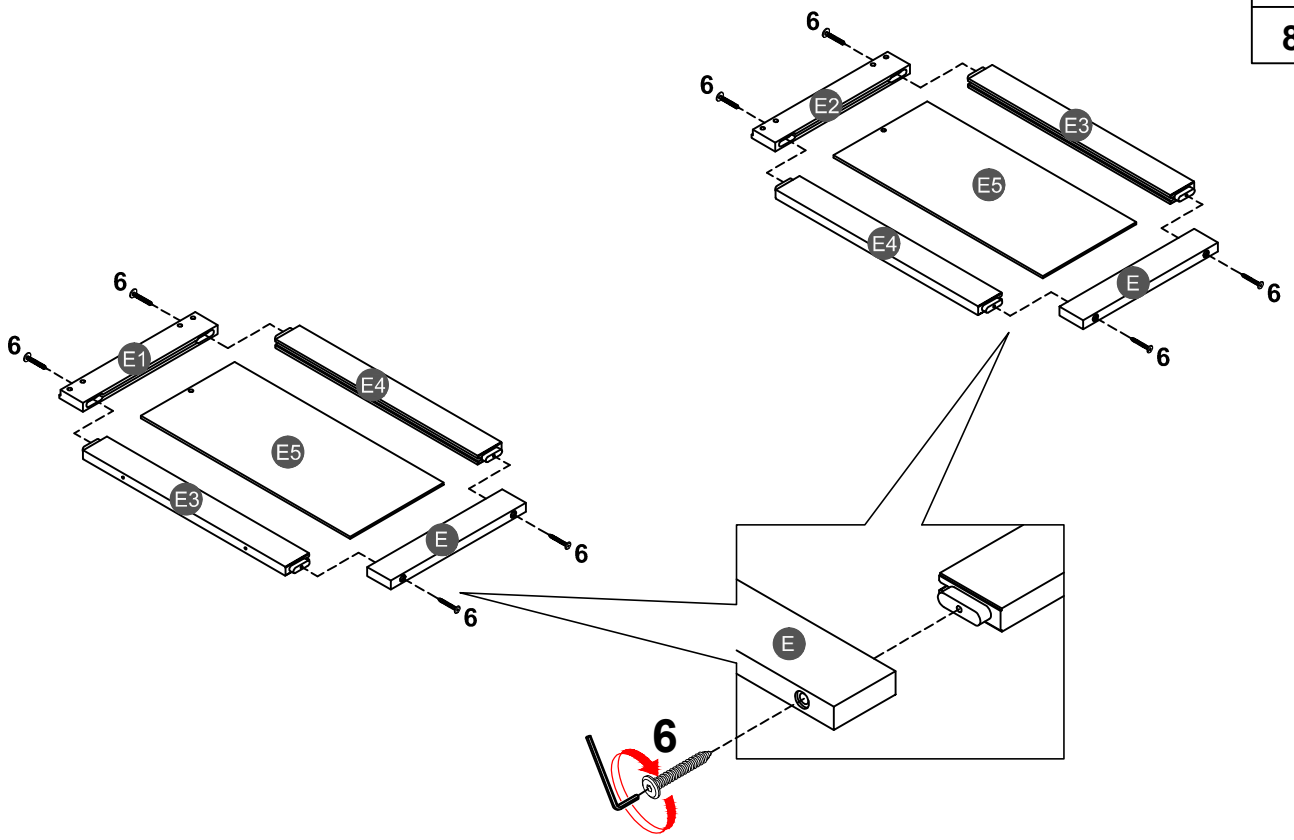


## STEP 16:

| 2 | 4 | 9 |
| --- | --- | --- |
| 4PCS | 4PCS | 4PCS |

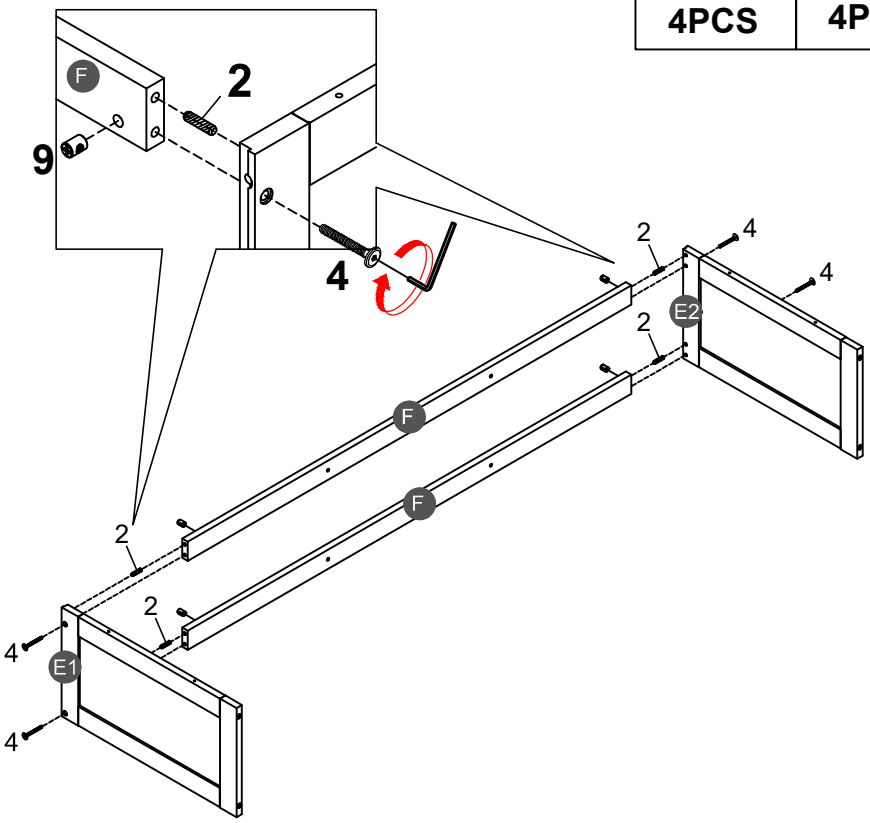

## STEP 17:

| 4 | 9 |
|---|---|
| 4PCS | 4PCS |

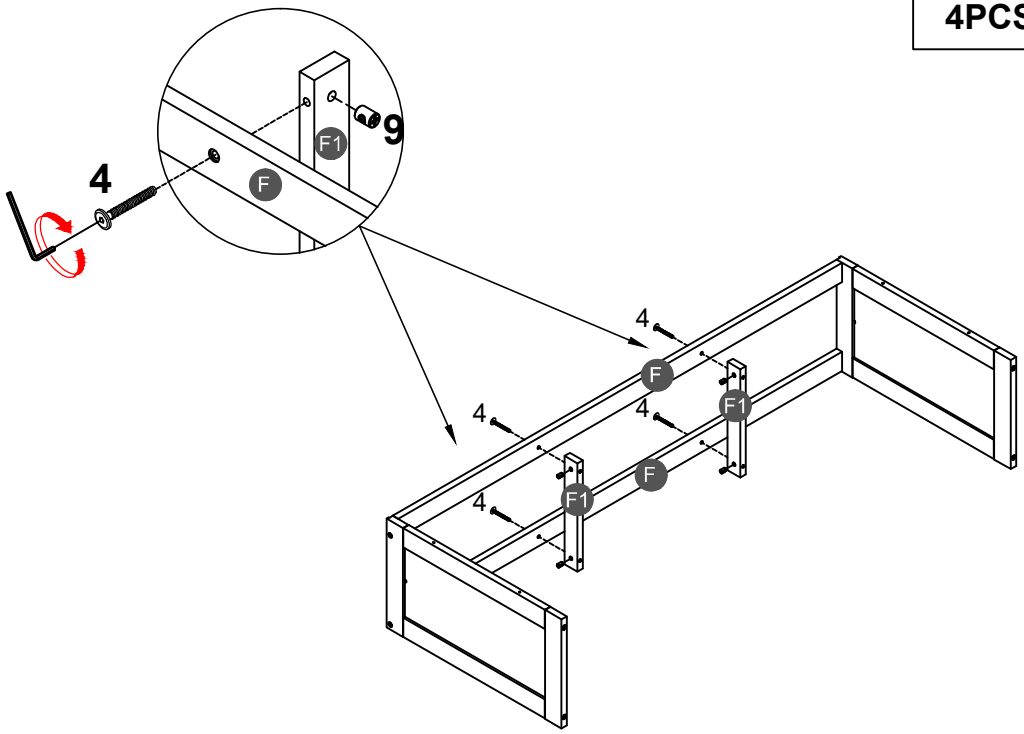


## STEP 18:

| 7 |
|---|
| 4PCS |

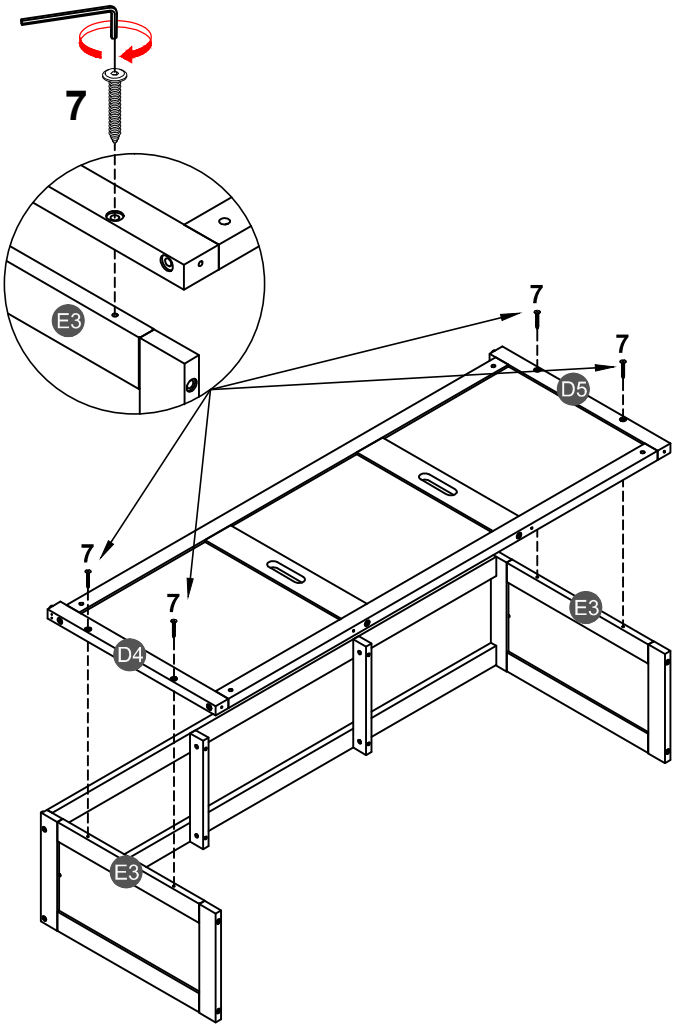

## STEP 19:

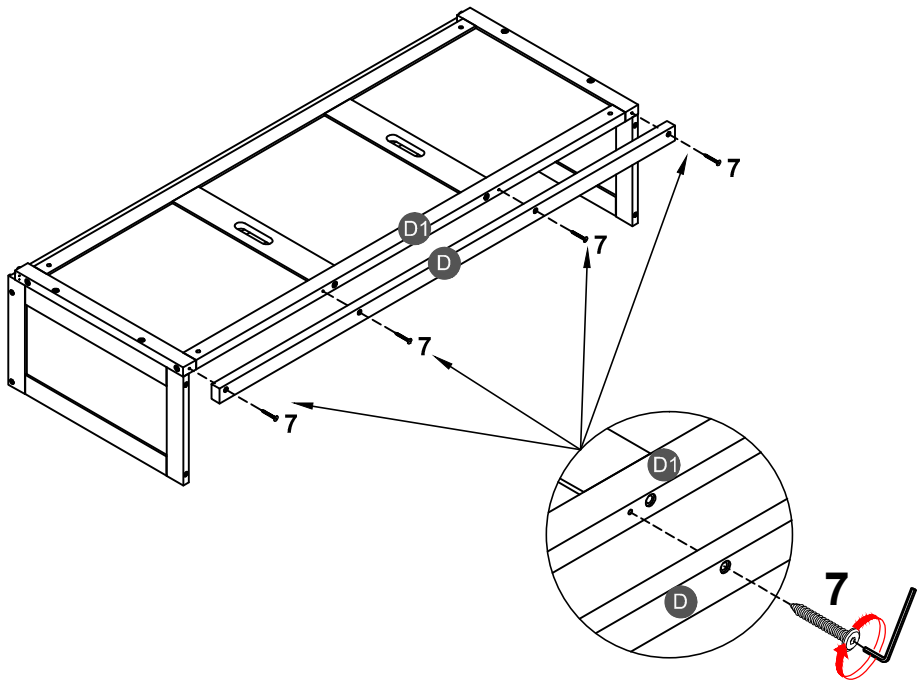


## STEP 20:

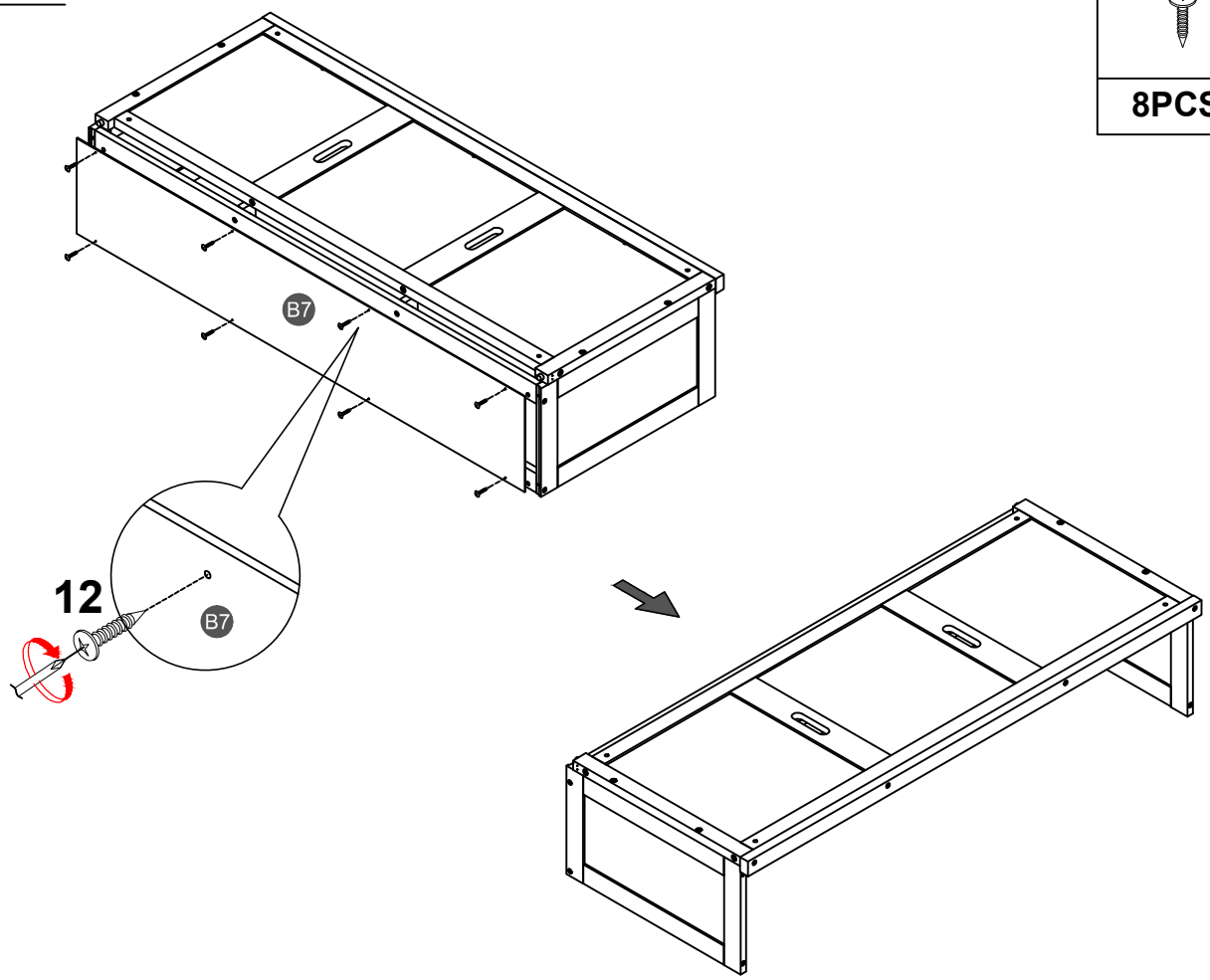

## STEP 21:

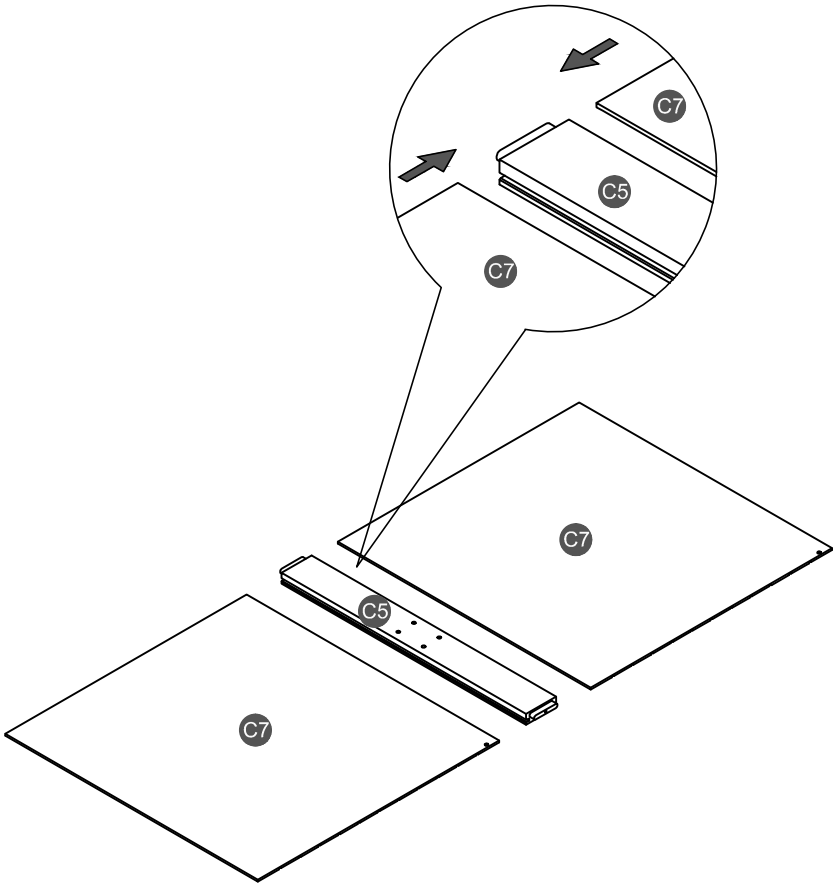


## STEP 22:

| 2 | 6 |
|---|---|
| 16PCS | 6PCS |

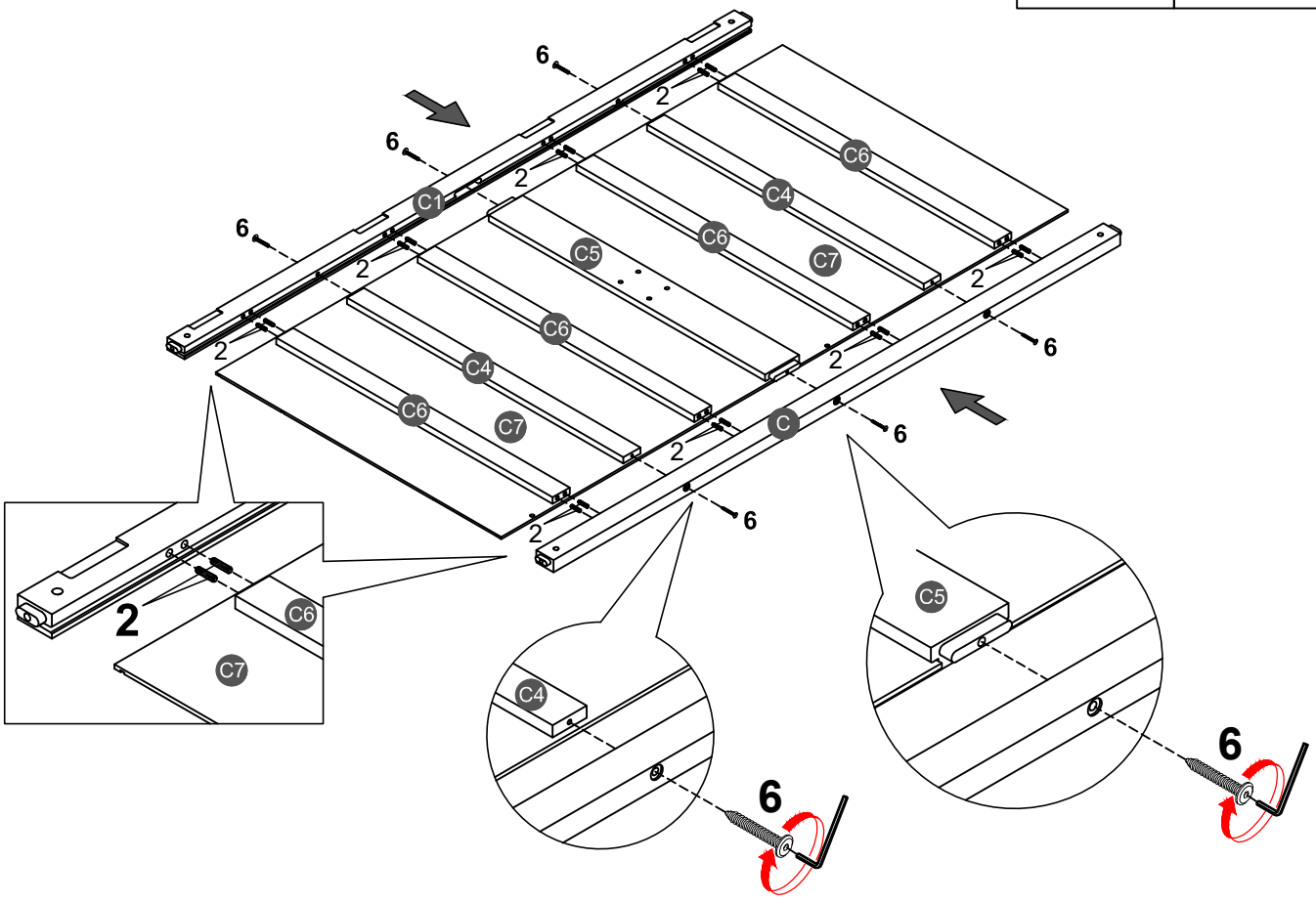

## STEP 23:

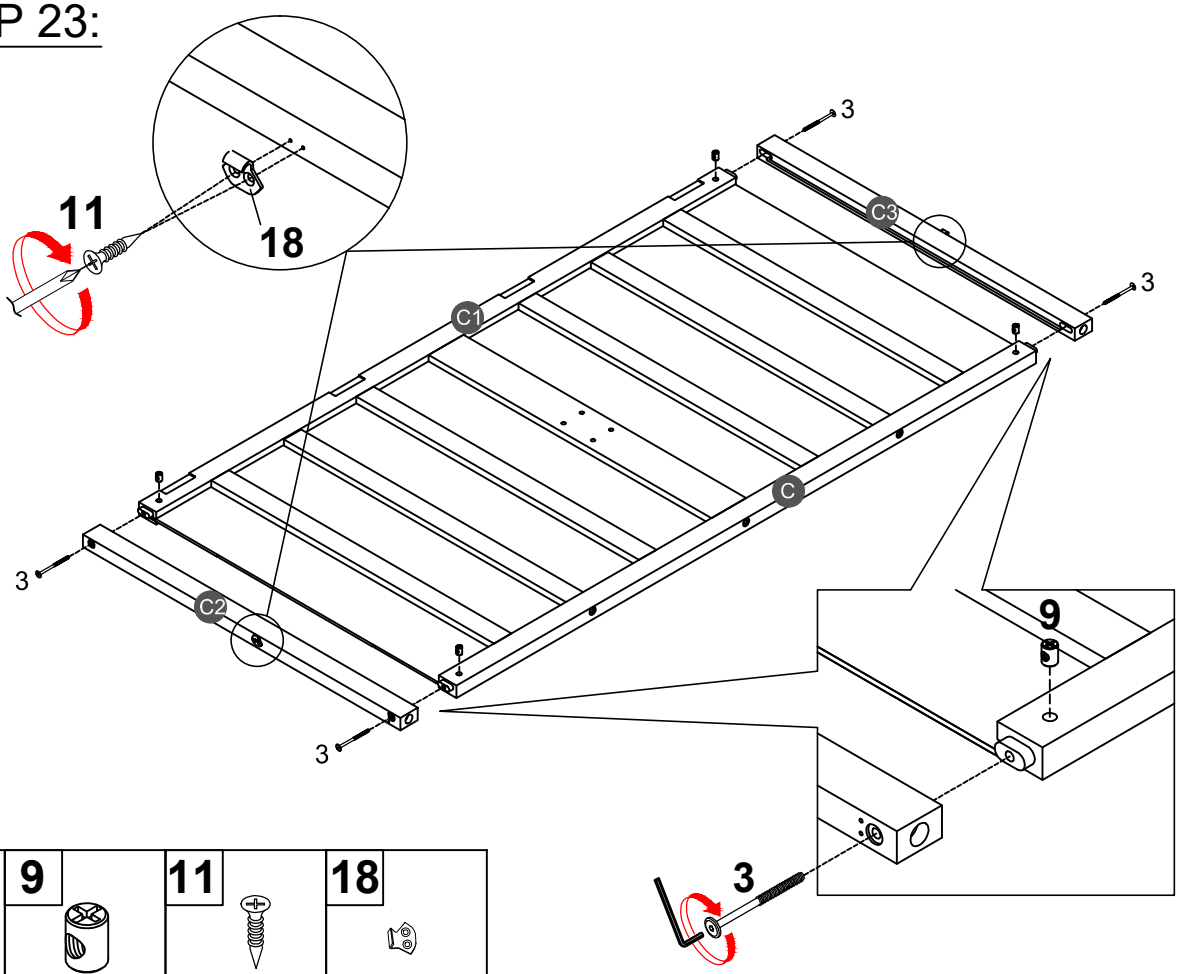


| 3 | 9 | 11 | 18 |
|---|---|---|---|
| 4PCS | 4PCS | 4PCS | 2PCS |

| 19 | 26 |
|---|---|
| 2PCS | 4PCS |

## STEP 24:

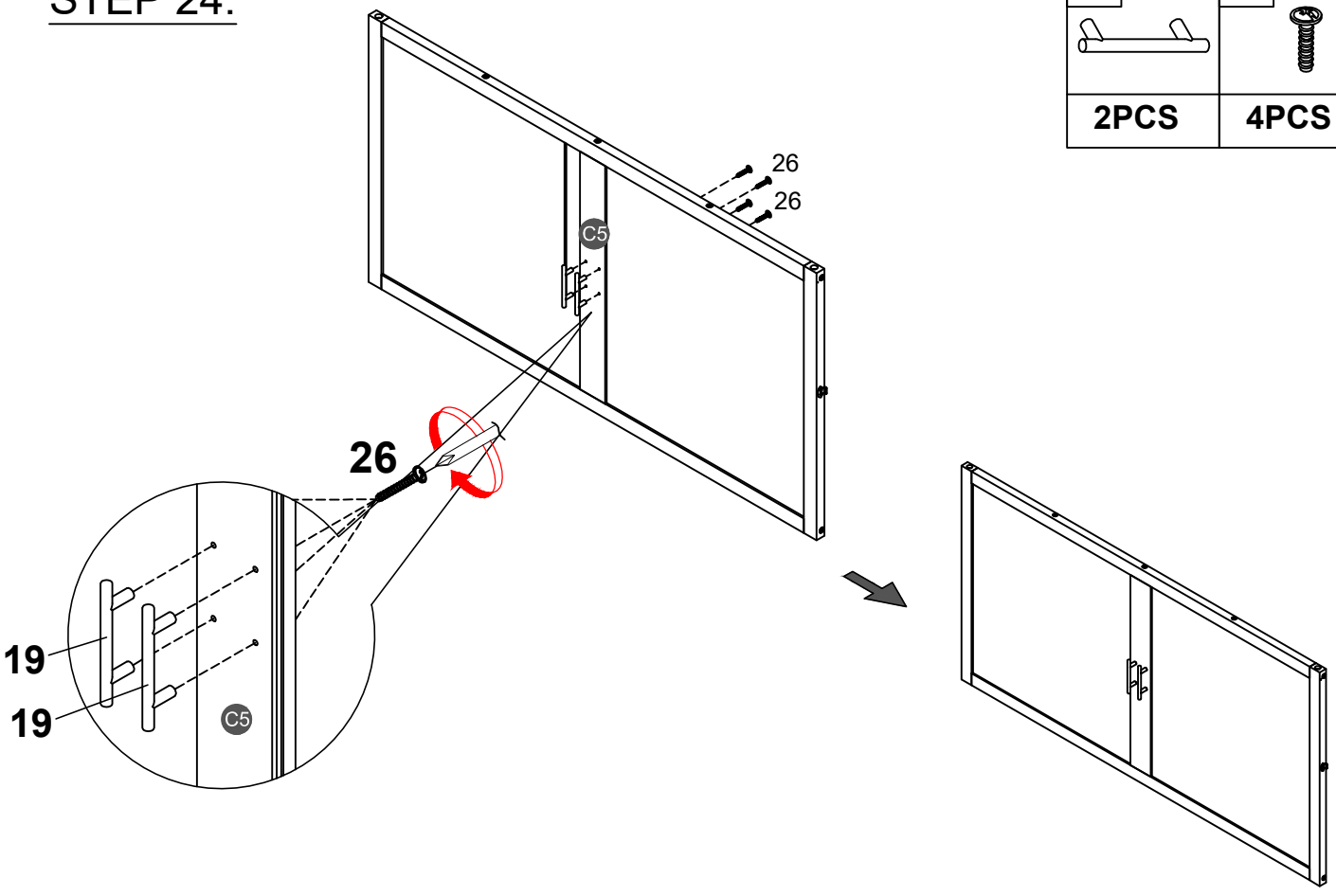

## STEP 25:

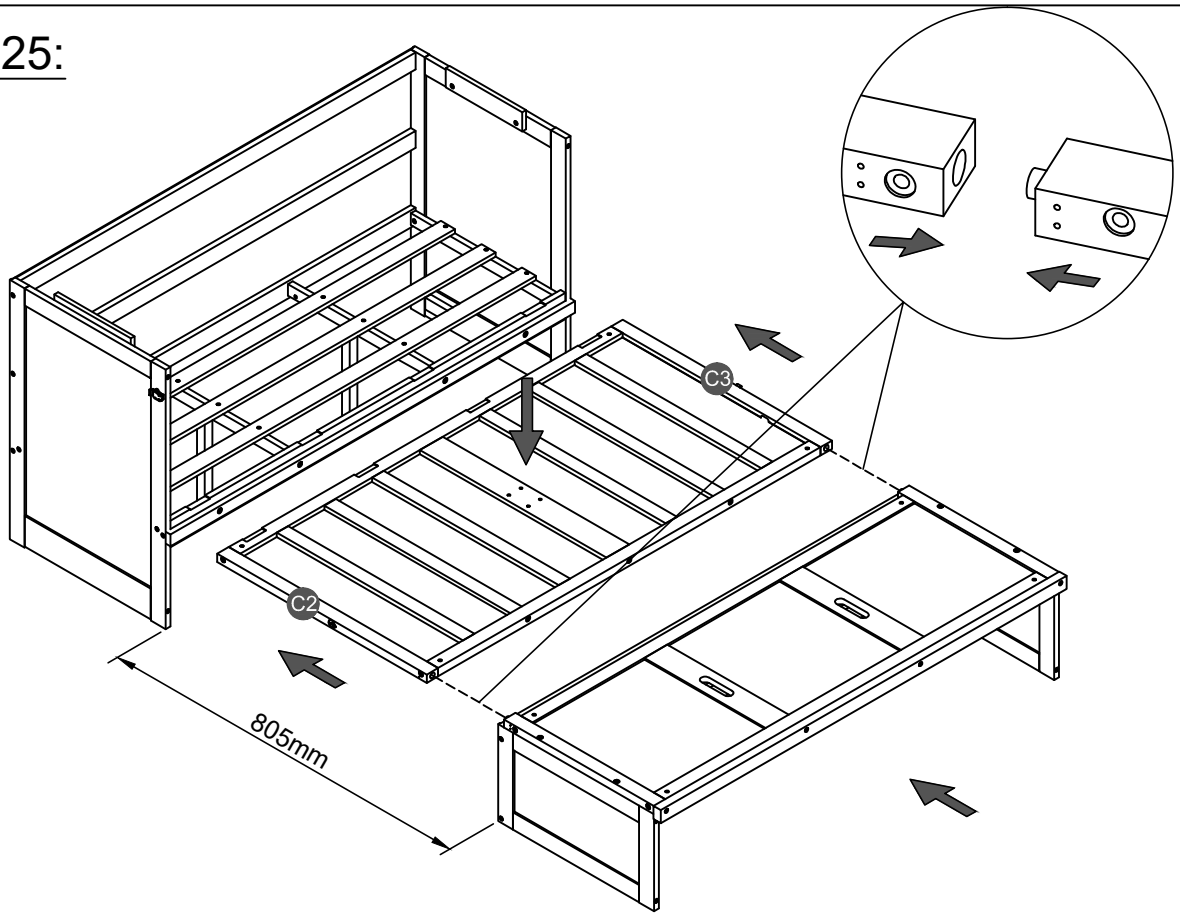


## STEP 26:

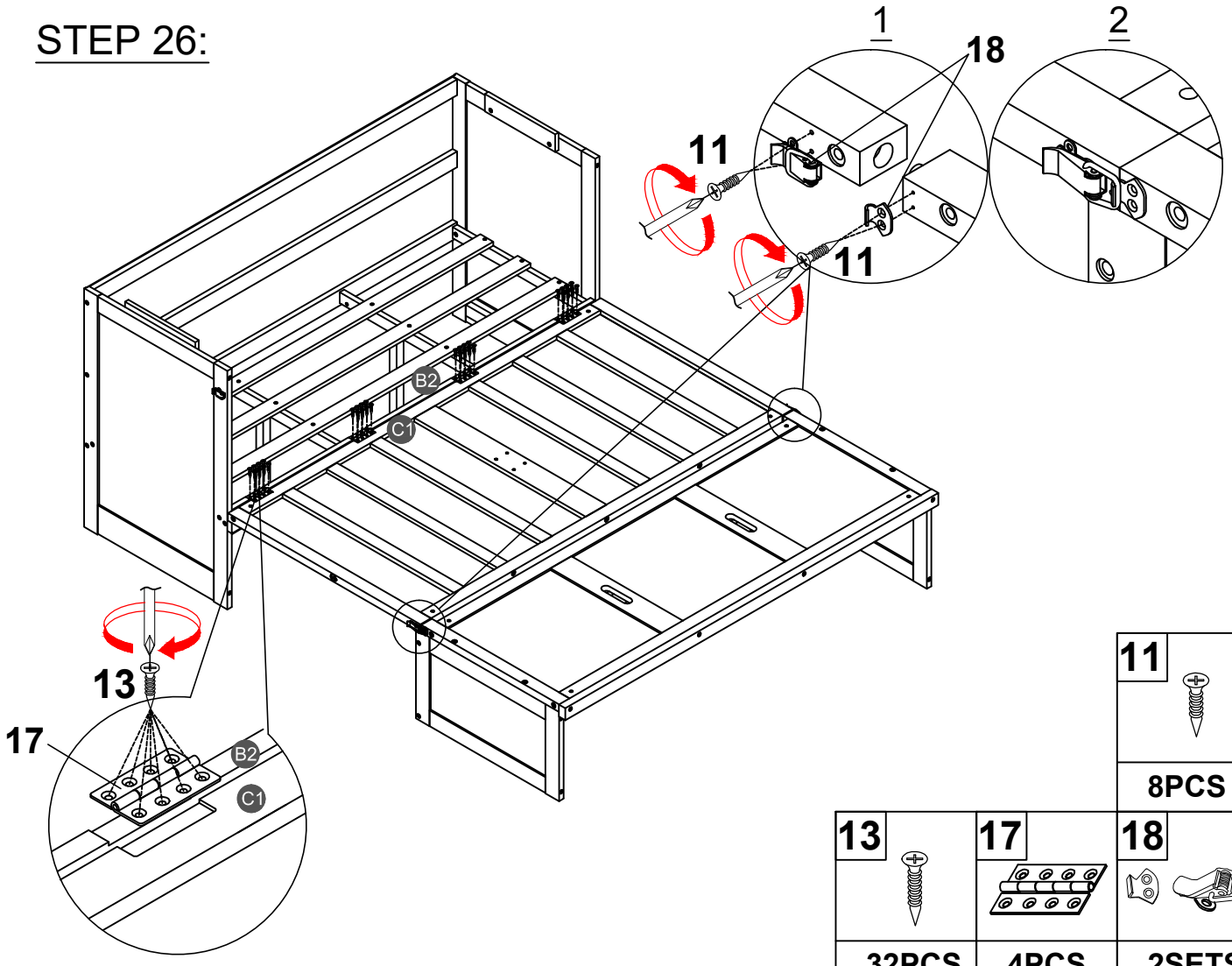


| 11 | 13 | 17 | 18 |
|---|---|---|---|
| 8PCS | 32PCS | 4PCS | 2SETS |

## STEP 27:

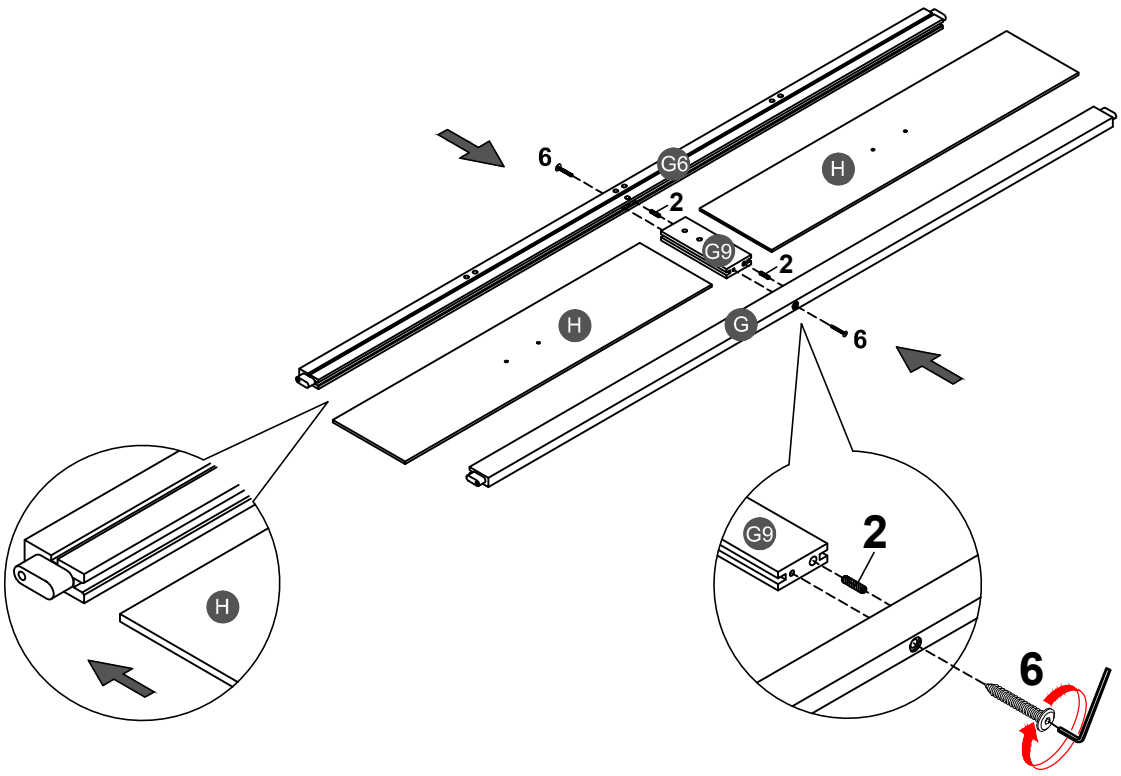


2
2PCS
6
2PCS

## STEP 28:

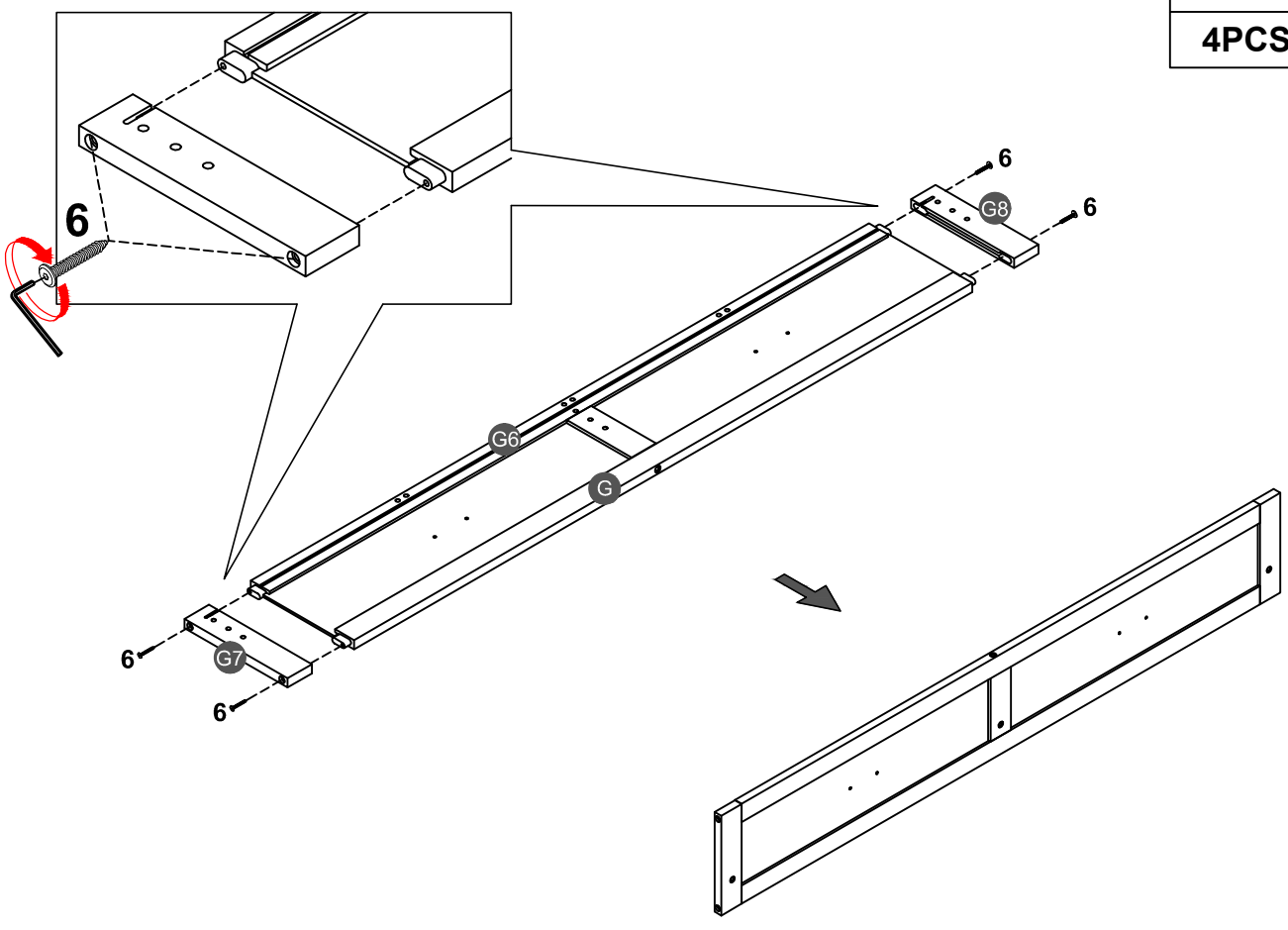


6
4PCS

## STEP 29:

| 2 | 4 | 9 |
|---|---|---|
| 6PCS | 3PCS | 3PCS |

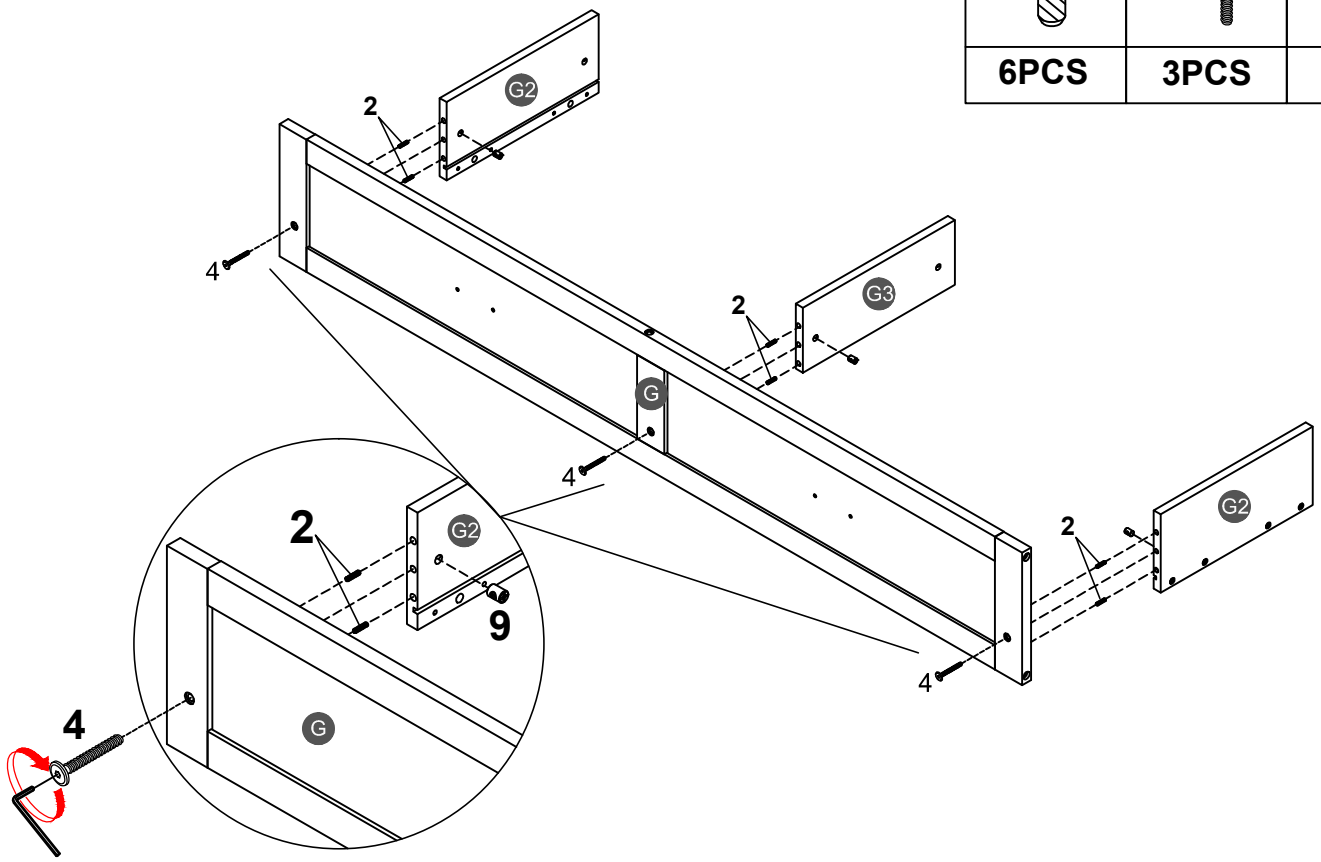


## STEP 30:

| 2 | 4 | 9 |
|---|---|---|
| 18PCS | 3PCS | 3PCS |

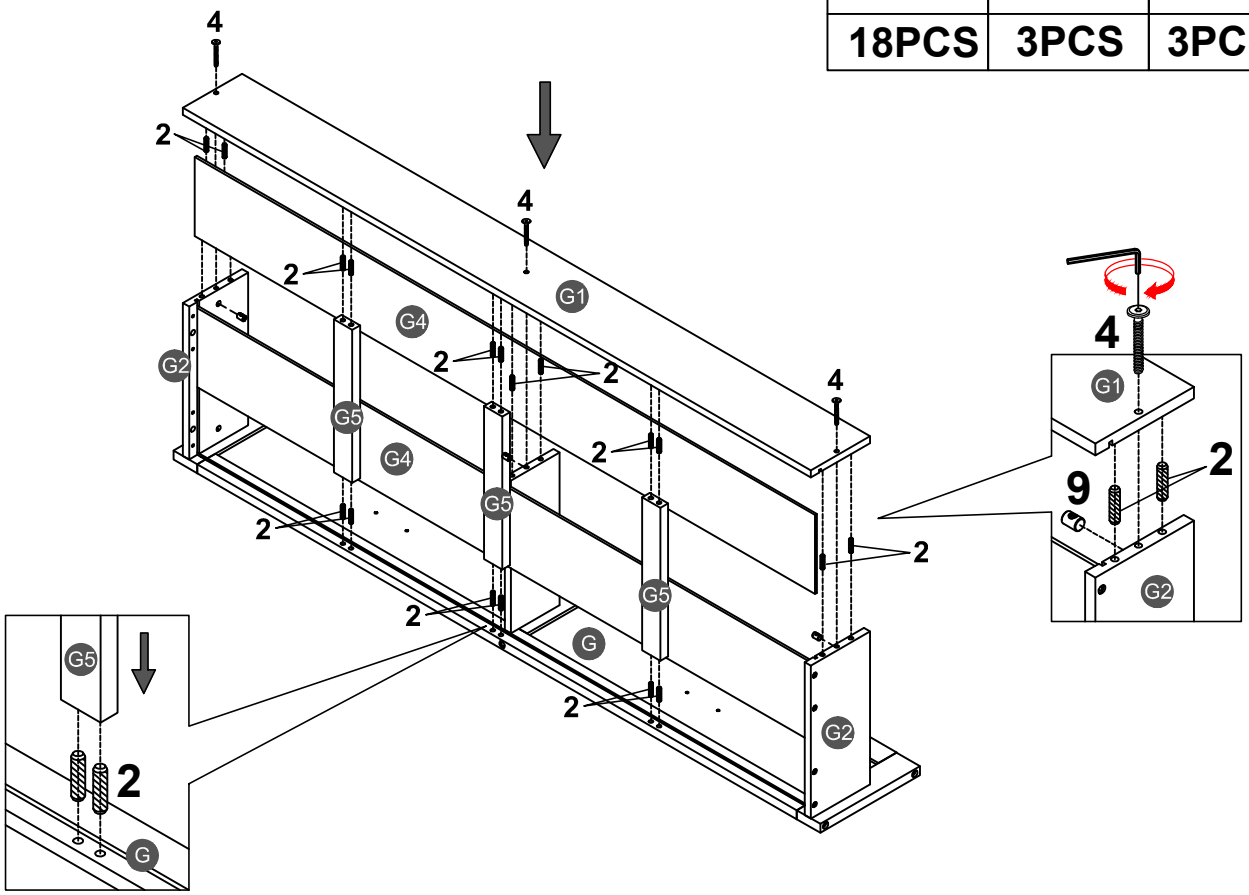

## STEP 31:

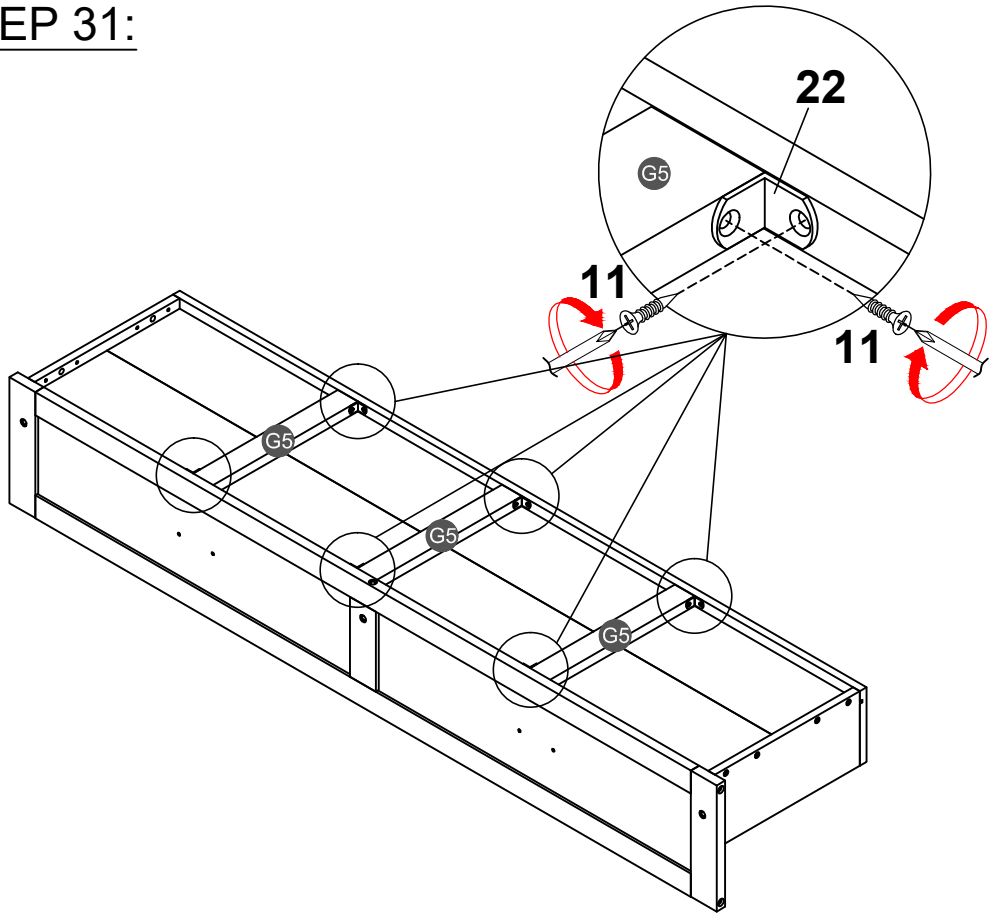


| 11 | 22 |
|---|---|
| 12PCS | 6PCS |

## STEP 32:

| 1 | 10 | 13 | 14 | 15 |
|---|---|---|---|---|
| 4PCS | 8PCS | 4PCS | 4PCS | 2PCS |

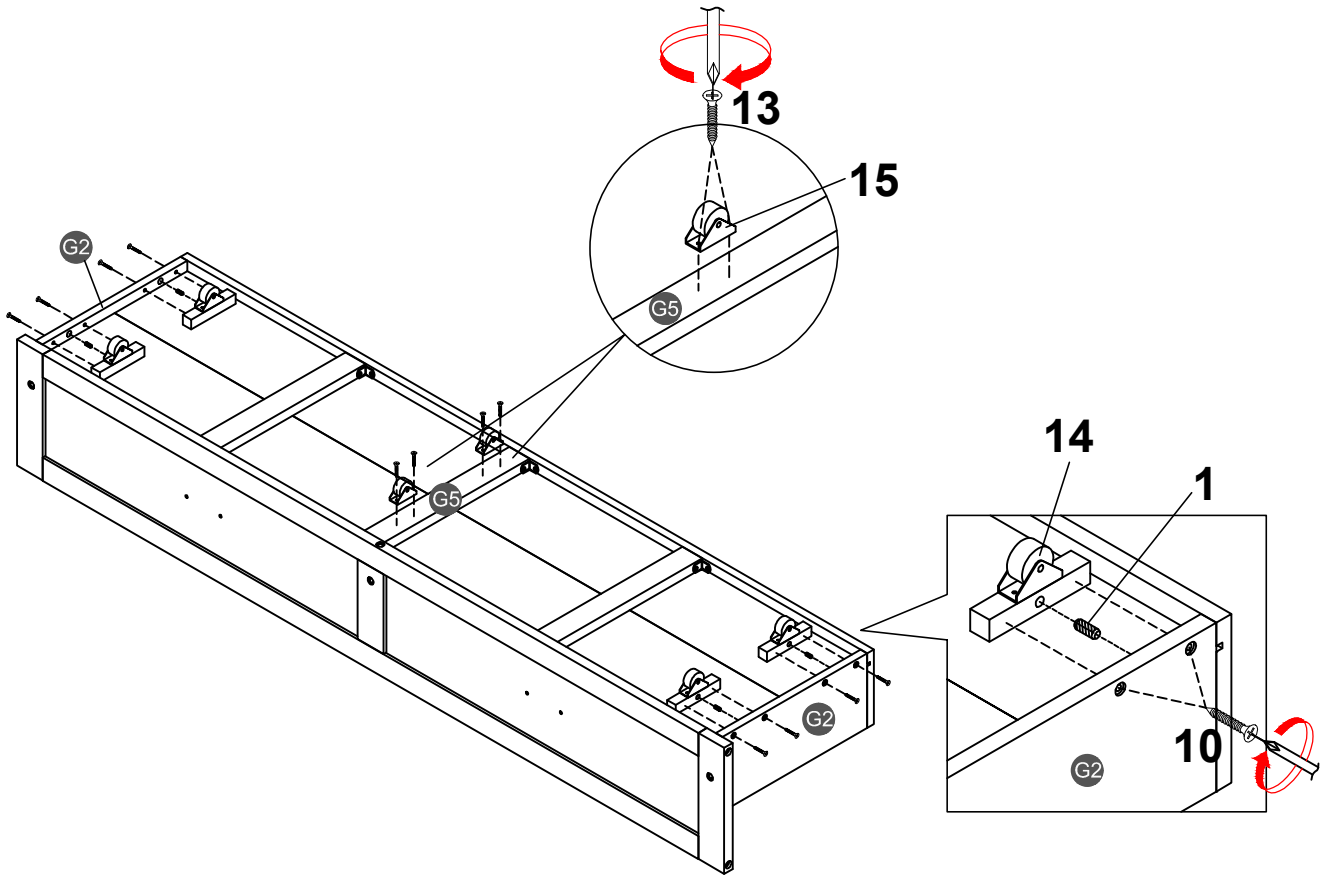

# STEP 33:

| 19 | 20 |
| --- | --- |
| 2PCS | 4PCS |

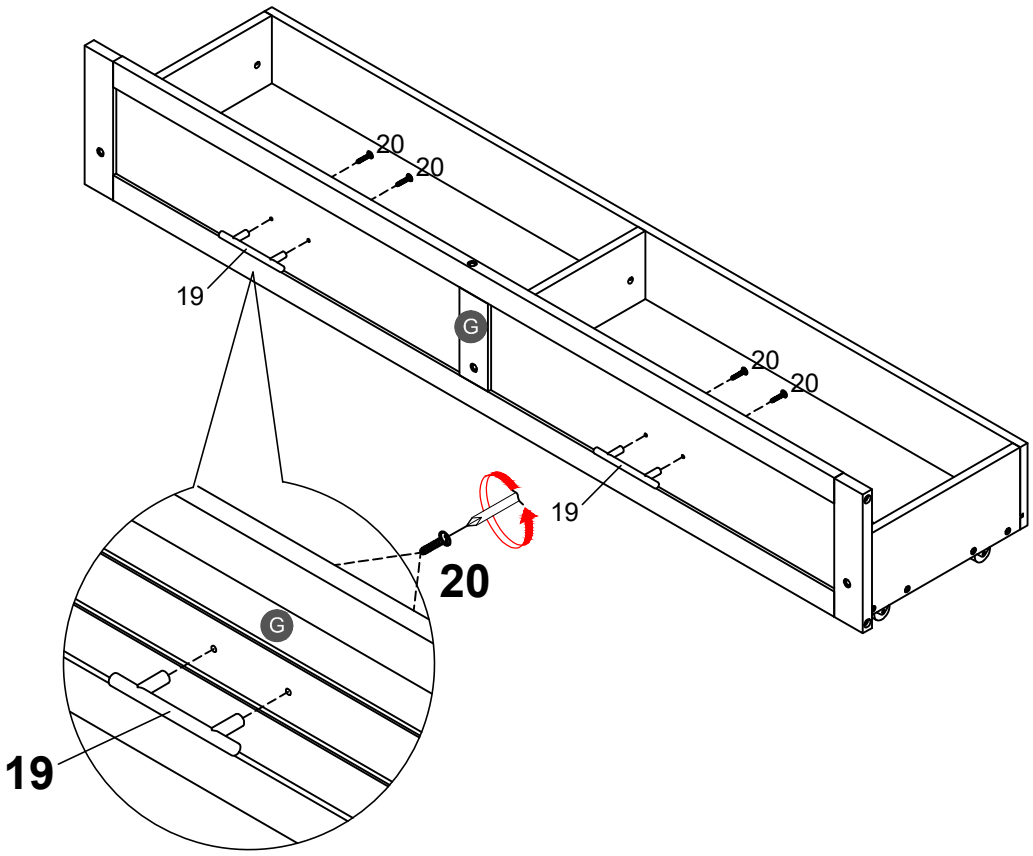


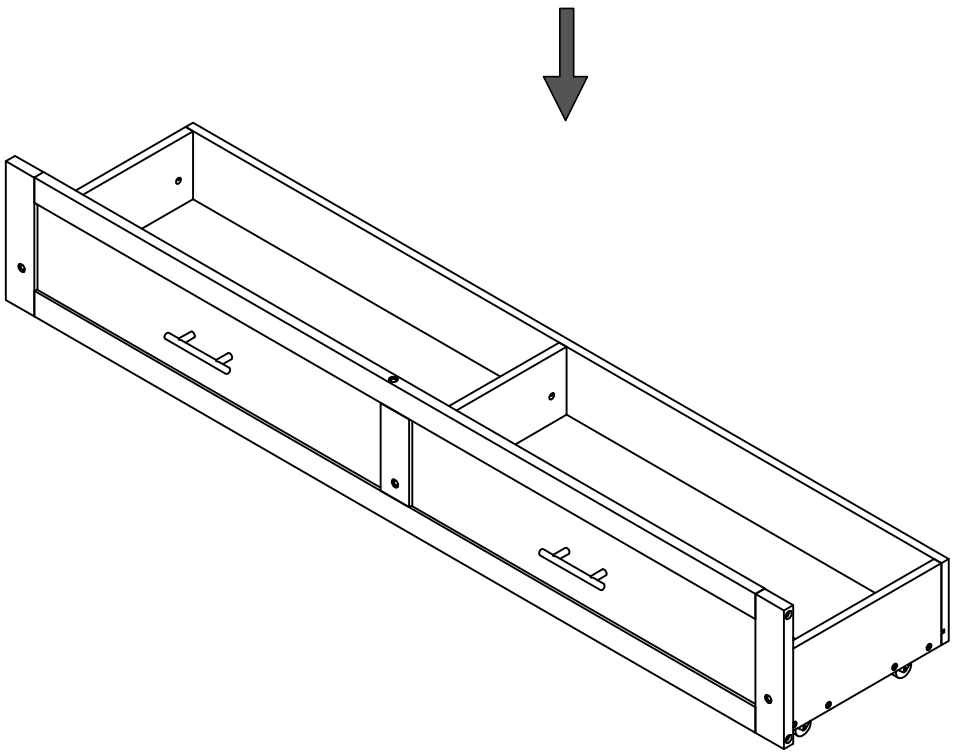

STEP 34:

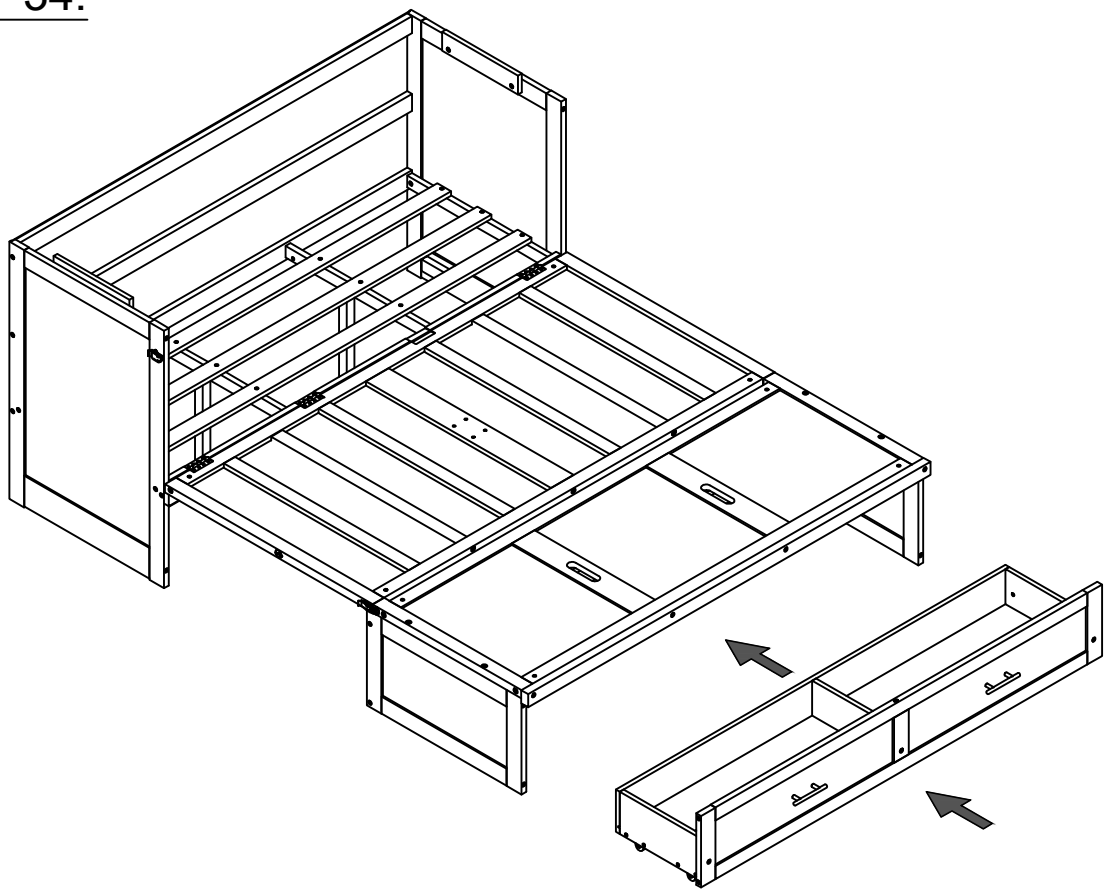

TYPE 1

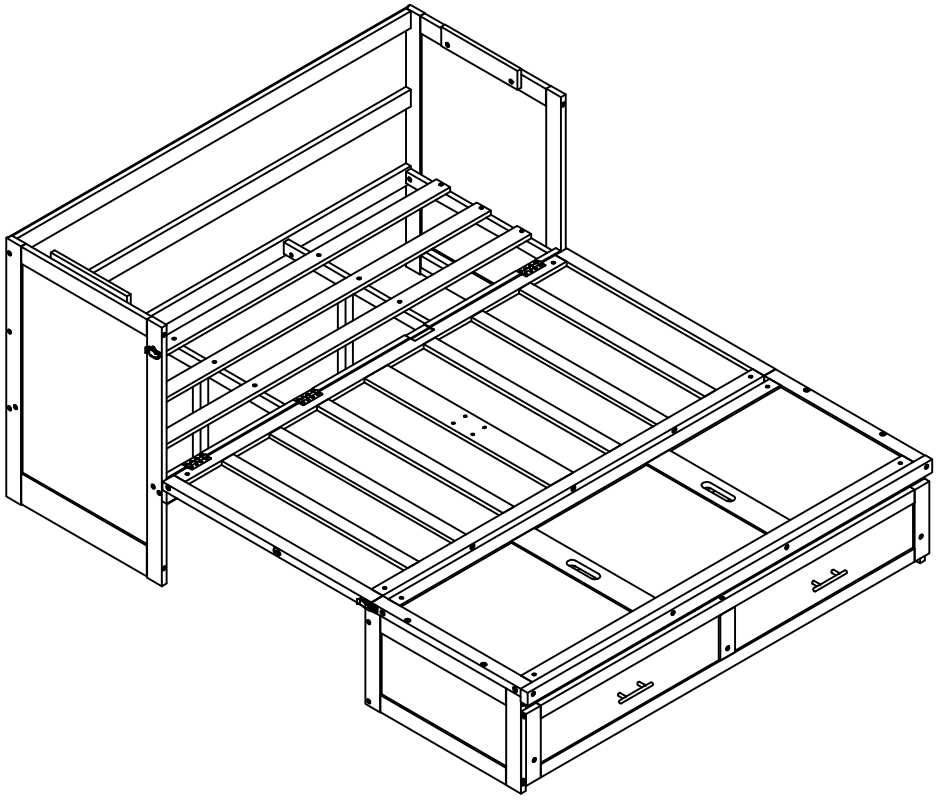

**Make sure to tighten all the screws of the bed.**

## STEP 35:

TYPE 2

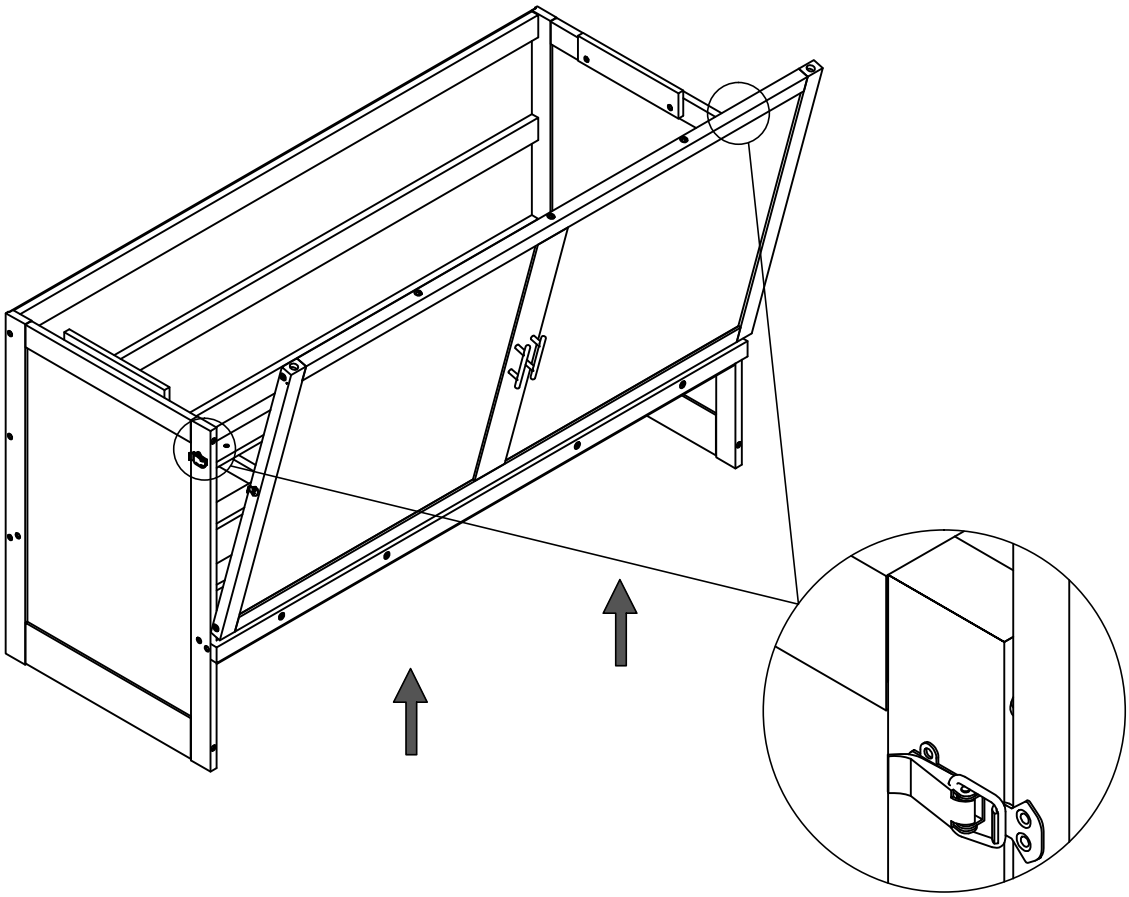

## STEP 36:

TYPE 2

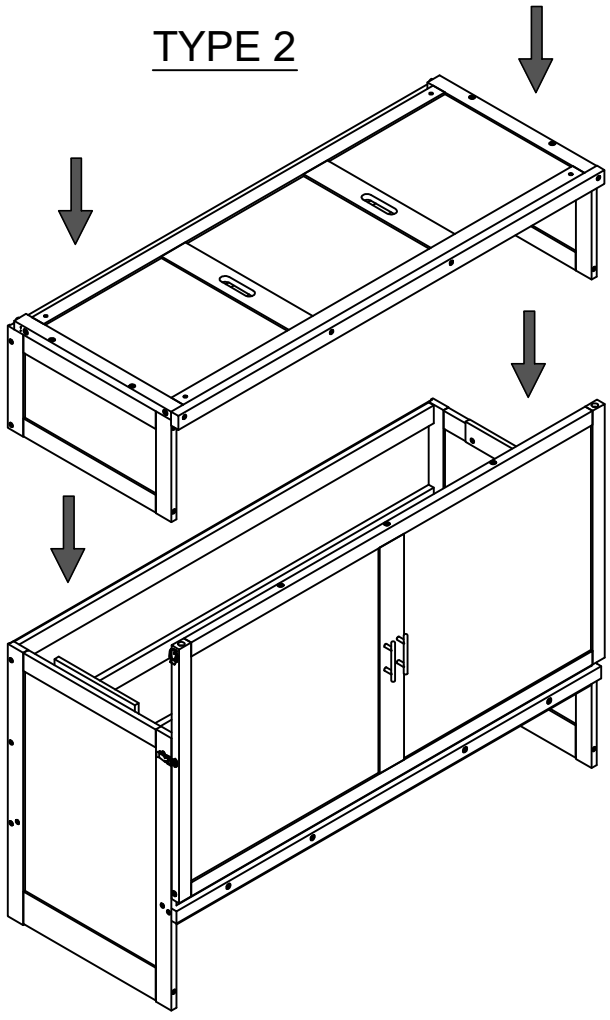

STEP 37:

TYPE 2

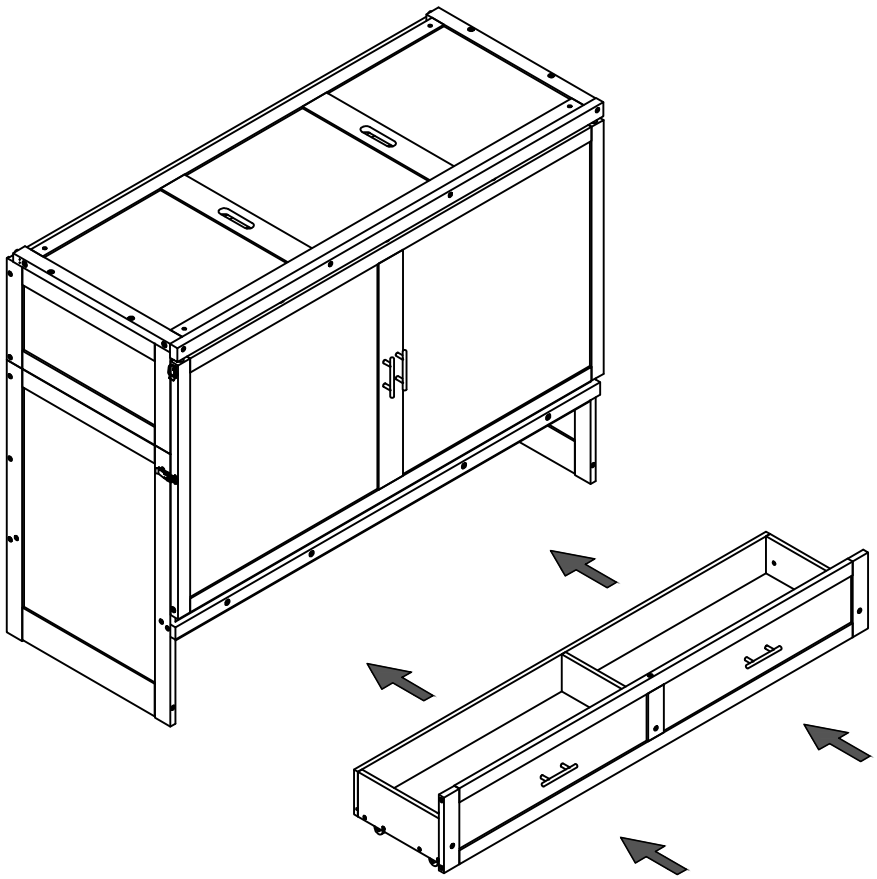

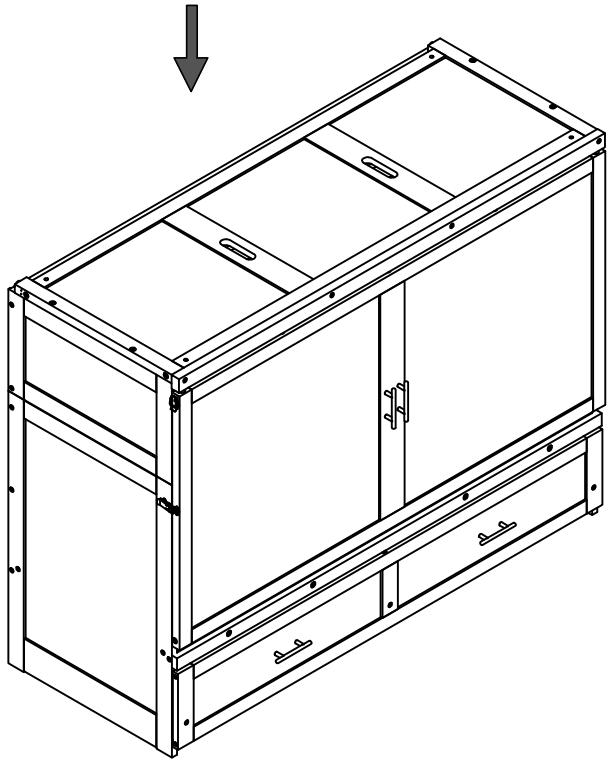

**Make sure to tighten all the screws of the bed.**

## STEP 38:

TYPE 2

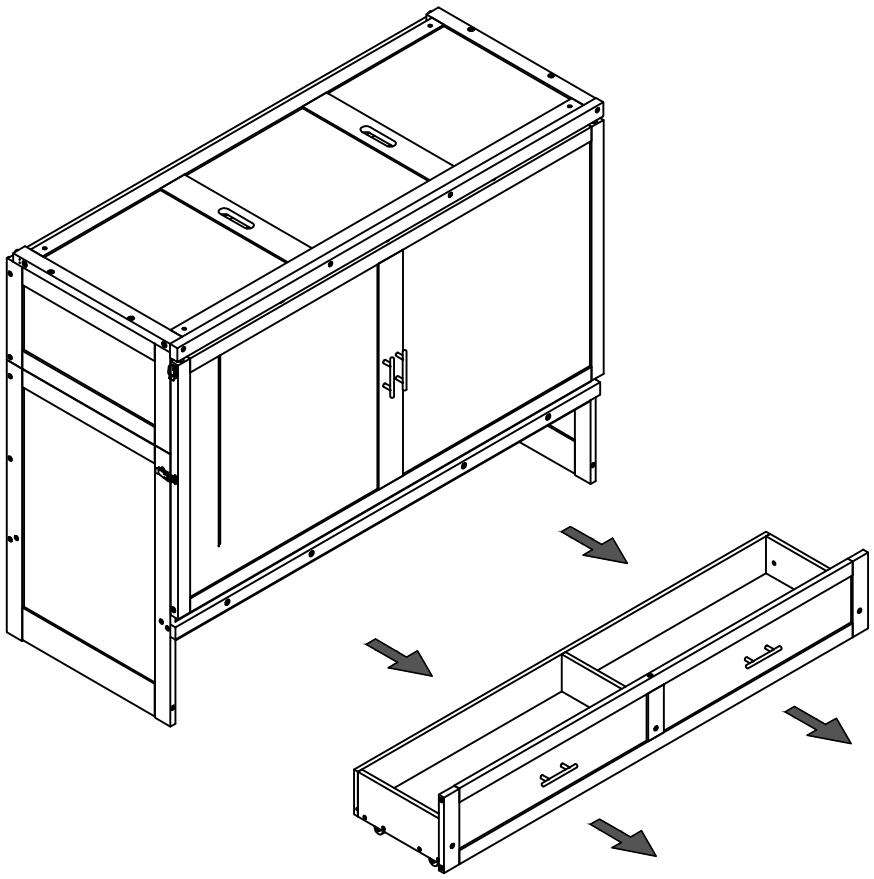

## STEP 39:

TYPE 2

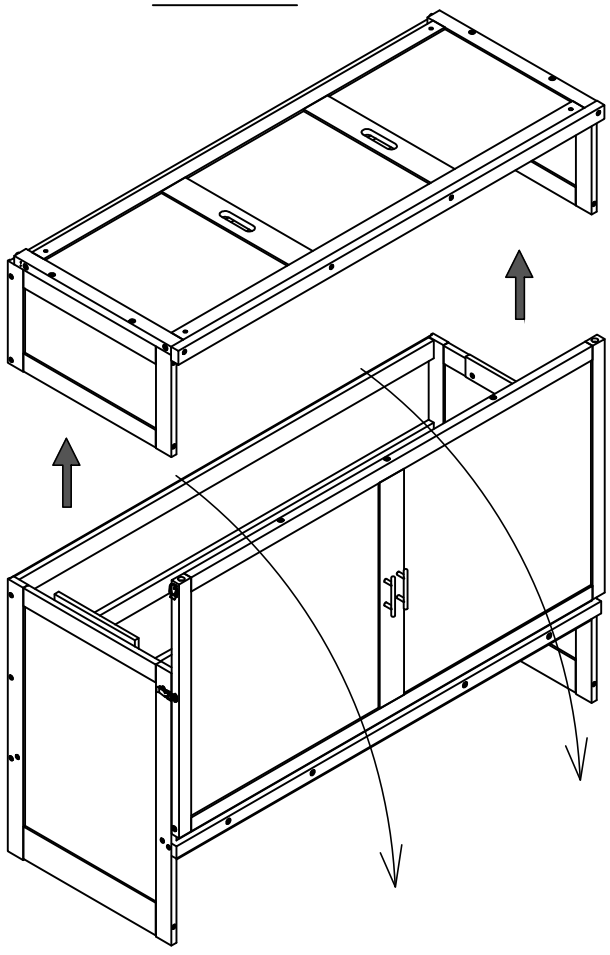

## STEP 40:

TYPE 2

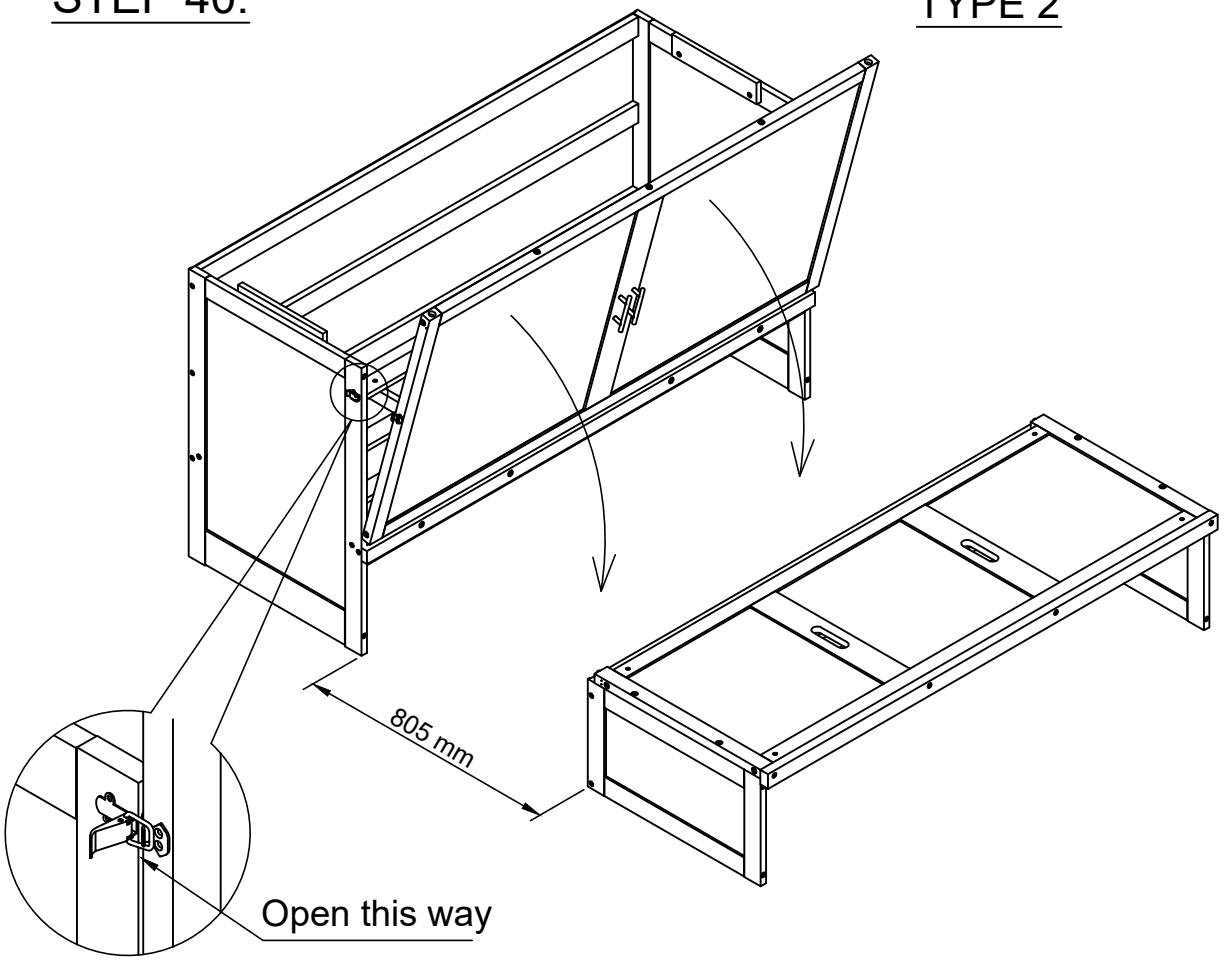


## STEP 41:

TYPE 2

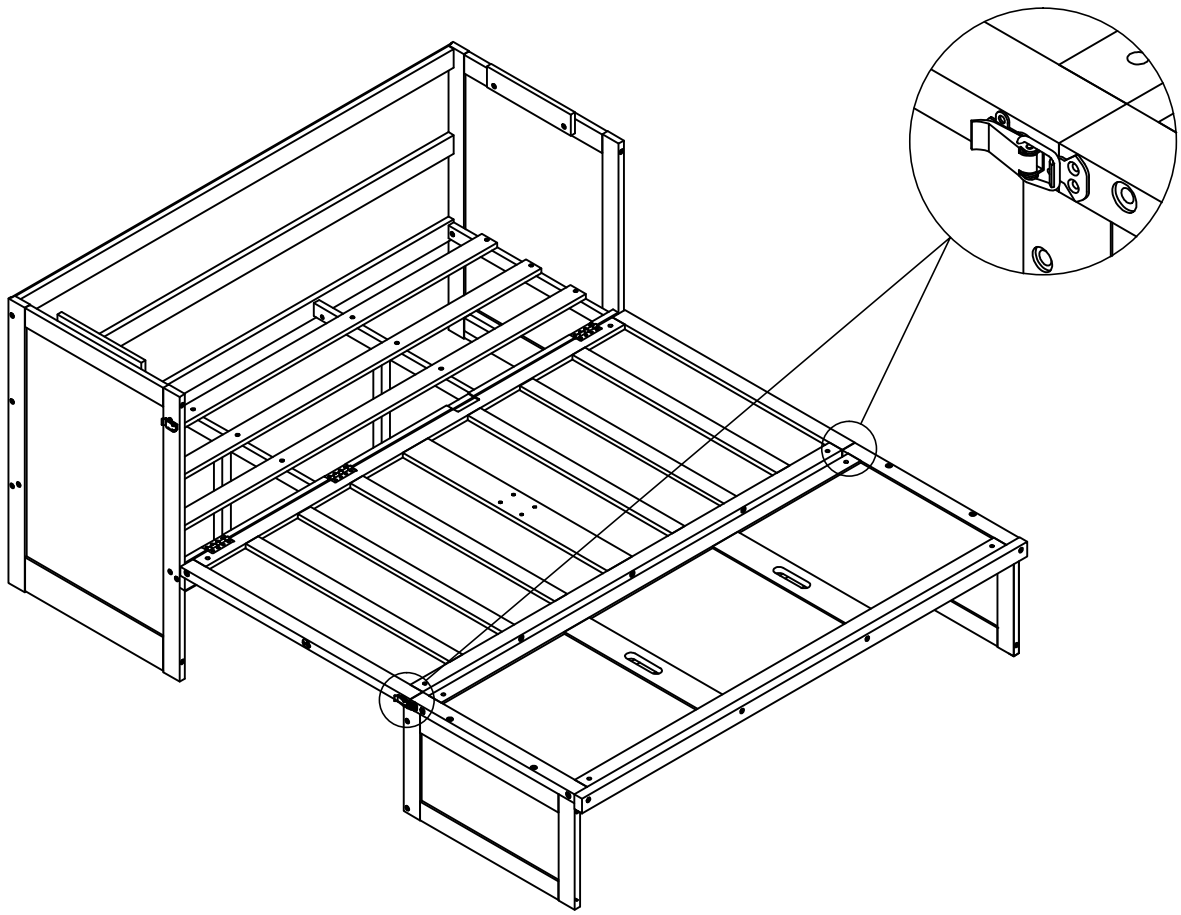

STEP 42:

TYPE 2

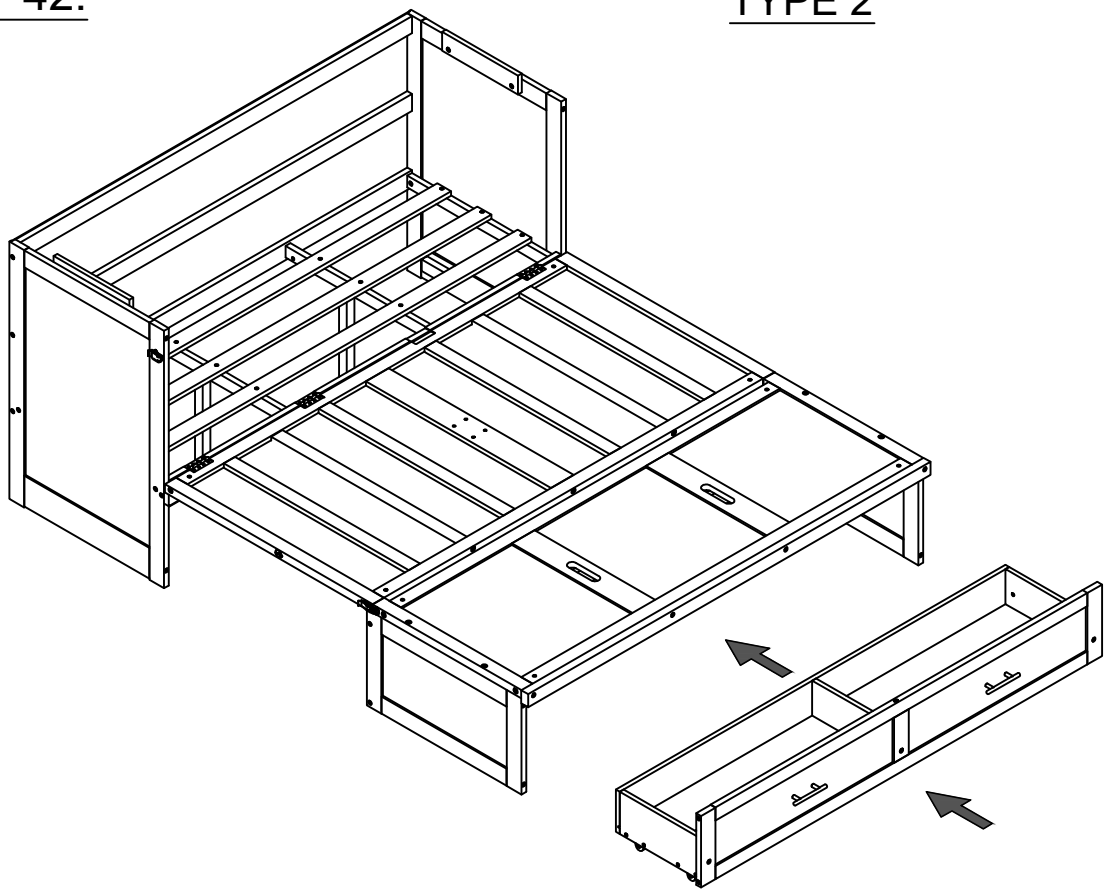

TYPE 2

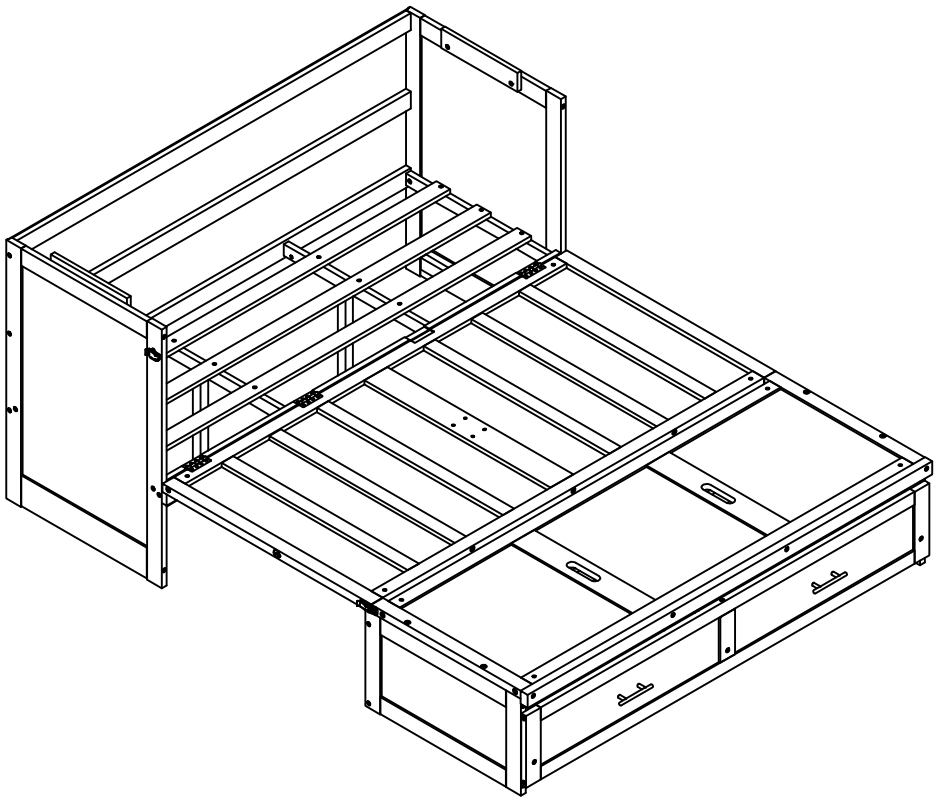

**Make sure to tighten all the screws of the bed.**

STEP A:

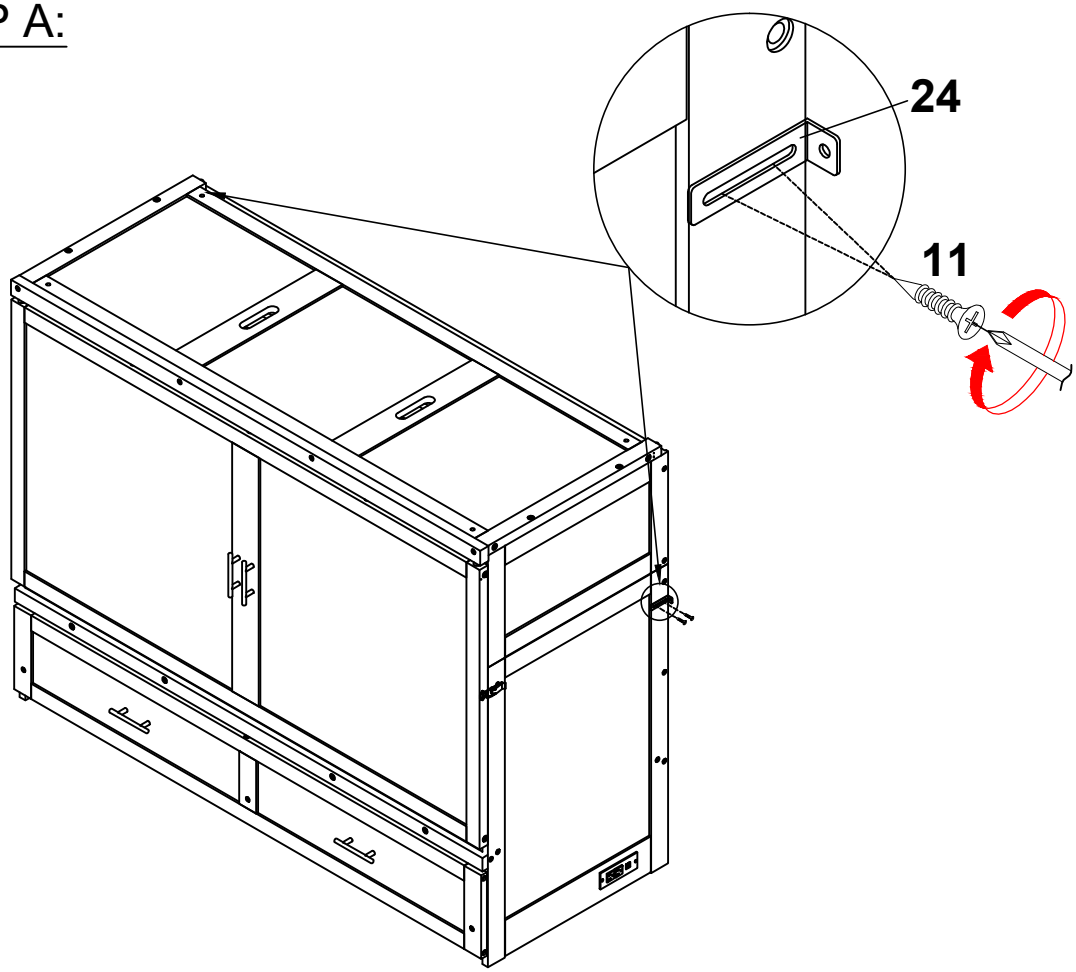


| 11 | |
|---|---|
| 4PCS | |
| 24 | |
| 2PCS | |

Installing the Anti-Tip Bracket.

STEP B:

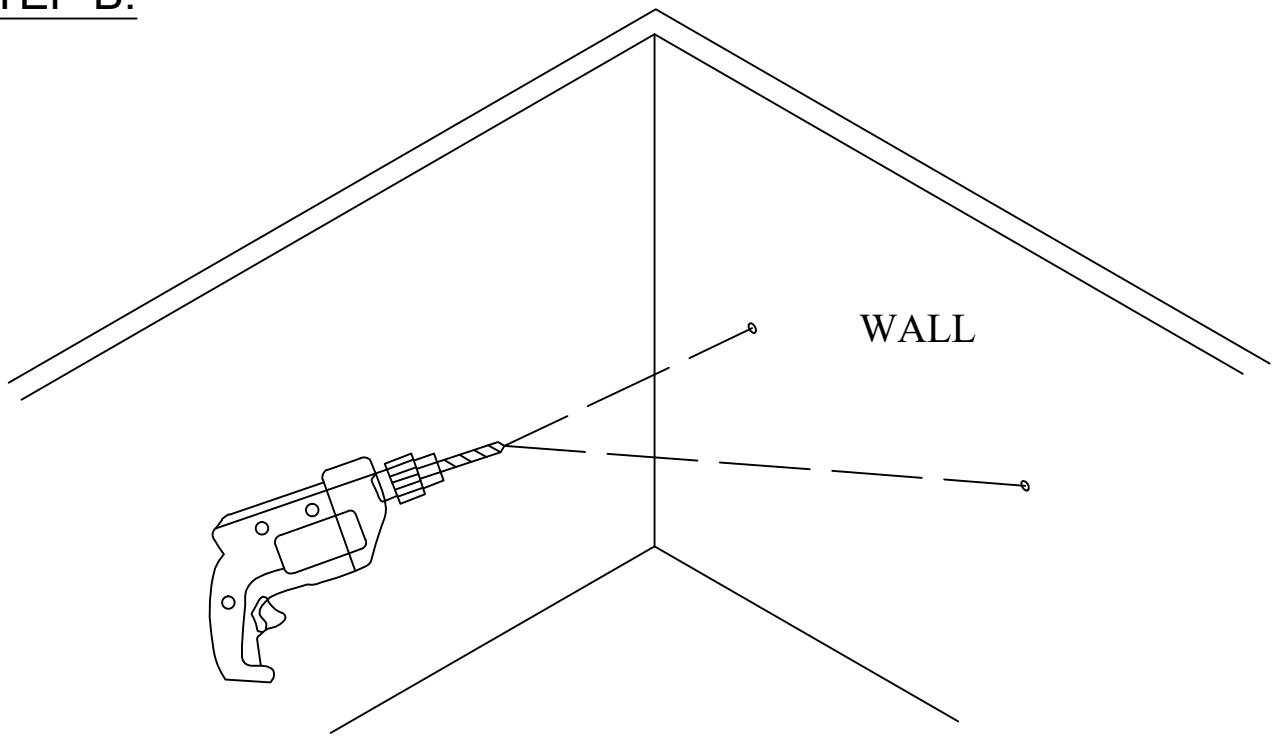


Drill holes in the wall.

## STEP C:

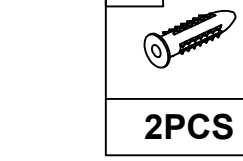





Tap plastic anchor  in with a hammer or mallet.

## STEP D:

Fix the bracket to the wall with screw.

