Assembly Instruction

3' Twin / 4'6" Full / 5' Queen		
A	Headboard	1 pc
B	Footboard	1 pc
C	Side Rail	2 pcs
D	R L D1 D2 Headboard Legs	2 pcs
E	Footboard Leg	2 pcs
F	Slat	3 pcs
G	Support Leg	3 pcs
H	JCBC M6 X 40	9 pcs
I	JCBC M6 X 50	2 pcs
J	Spring Washer	6 pcs
K	Flat Washer	6 pcs
L	M4 x 100 mm	1 pc
M	M5 x 70mm	1 pc
N	CSK M4 x 32mm	6 pcs

Step 1:Tighten the headboard legs (D) and footboard legs (E) to the headboard (A) and footboard (B).

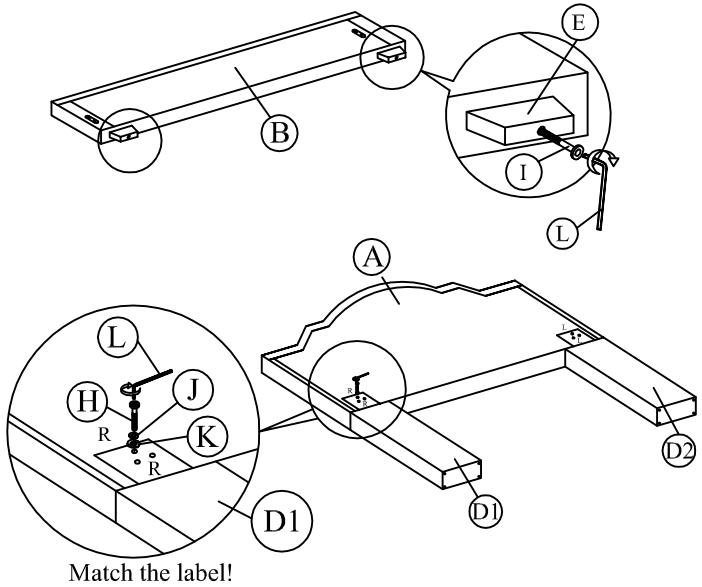

Step 2: Attach Side Rail (C) to Headboard (A) and Footboard (B) by pushing the bracket down to fit it.

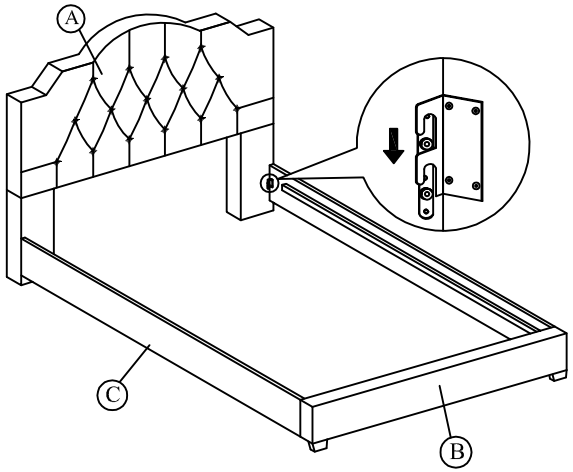

Step 3: Attach the support legs (G) to the slats (F).

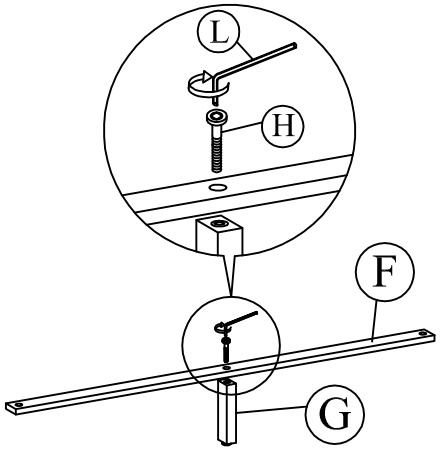
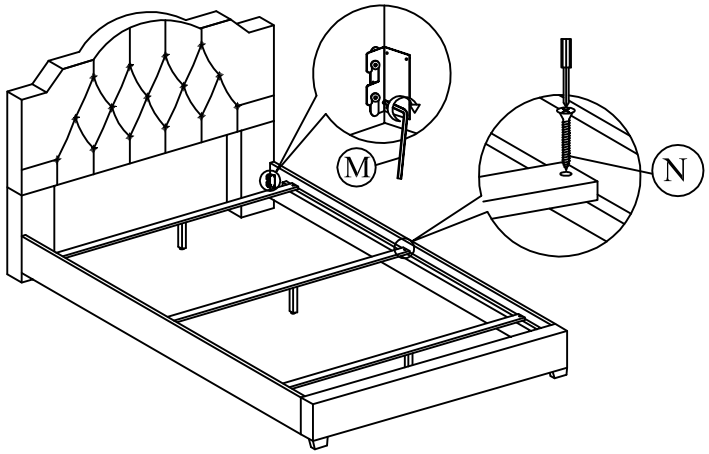
Step 4: Put the slat into the bed frame and tighten the 4 corner with Allen key (L) .Before tightening the CSK screw (N) to the side rail support , Make sure there is no gap between slat and the side rail .