Outdoor Chaise Lounger

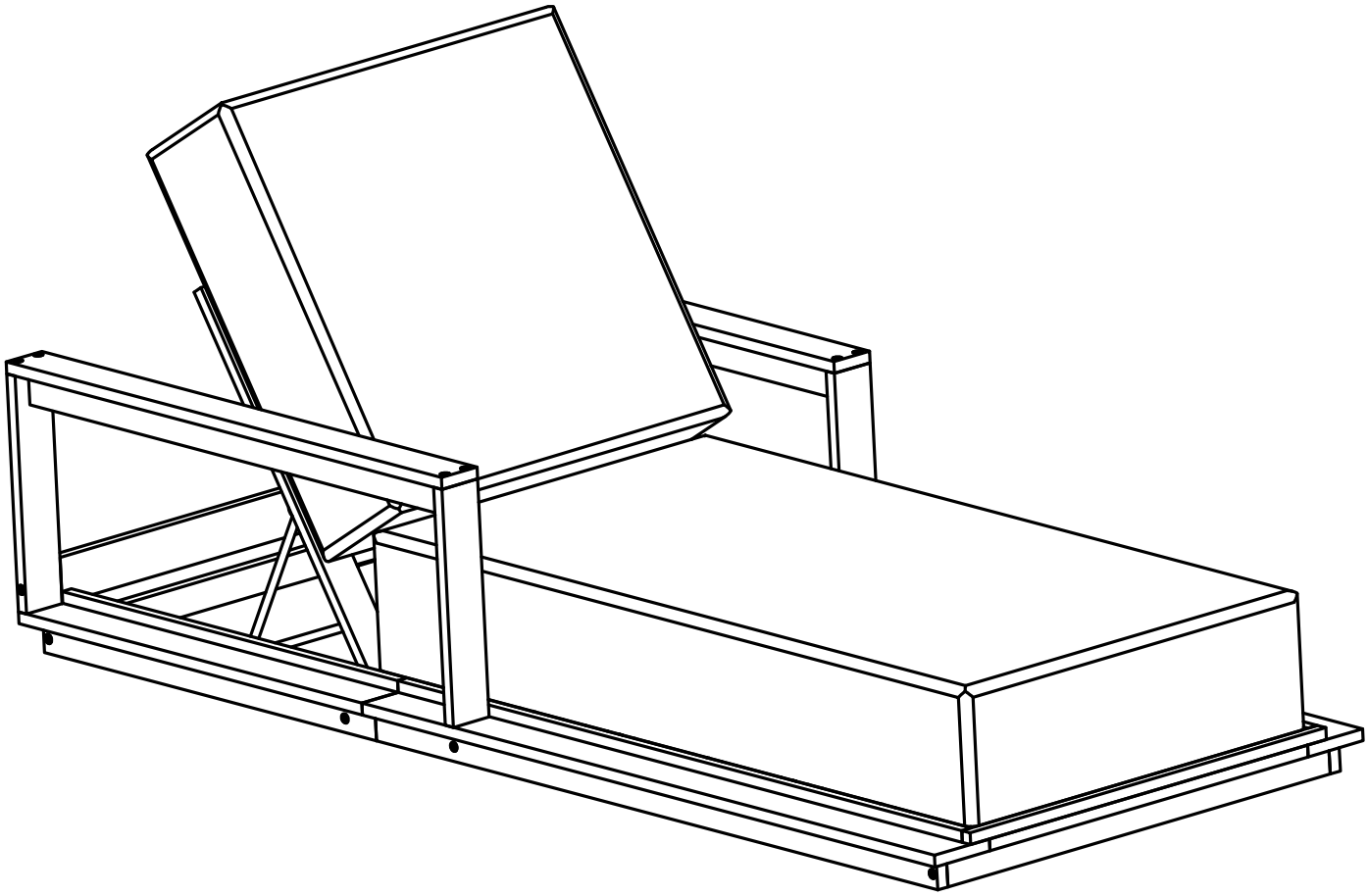

N769P423384T

Please read all instructions carefully:

1. Have 2 adults on hand for assembly.
2. 50% Tighten before fixing all screws, Allen wrench is recommended instead of an electric drill.
3. Place the item on a flat ground to adjust and make sure it remains stable.
4. Tighten up all screws with tools gradually.
5. If the screws are not aligned with holes during assembly, please loosen all the other screws to 50% and continue the assembly process.
6. If the item is not stable, please loosen all the screws, adjust it on a flat ground and tighten up all screws again.
7. Note : If one or some screws are fully tightened during assembly, chances are the others will not be aligned with holes. In addition, all the holes are designed to be relatively larger to provide more space for the adjustment of the screws.

Assembly Instruction

Caution: You must read these Assembly Instructions before you proceed.

SAFETY WARNING

Never adjust chaise lounge or recliner backrest while seated.

Always make sure the backrest is flat before moving the chaise lounge.

Keep all limbs clear from under the backrest when it is in a raised position.

Serious finger, hand, or other bodily injuries may result from adjusting the chaise lounge backrest position while seated.

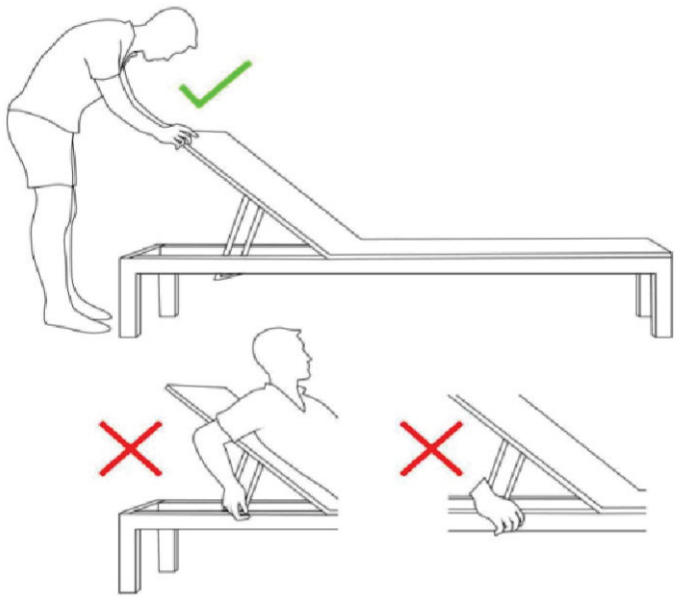

The examples pictured above are non exhaustive and are for your reference only

Care & Maintenance

- Not for commercial use. For residential use only
- Do not put hot items directly on furniture surface.
- Do not clean furniture with harsh cleansers or polish.
- To obtain the longest lifespan of your outdoor products, minimizing exposure to direct sunlight is recommended.
- Children should not climb or jump on the furniture.
- Do not write on furniture without a padded barrier to protect the surface.
- To obtain the longest lifespan of your outdoor products, avoid extended and lengthy exposure to rain, snow, and direct sunshine. Whenever possible cover the product and /or place under patio or awnings.
- Stains may be removed with mild soap solution and damp cloth..
- Dust and pick-up spills using a clean, non-colored, lint-free cloth.

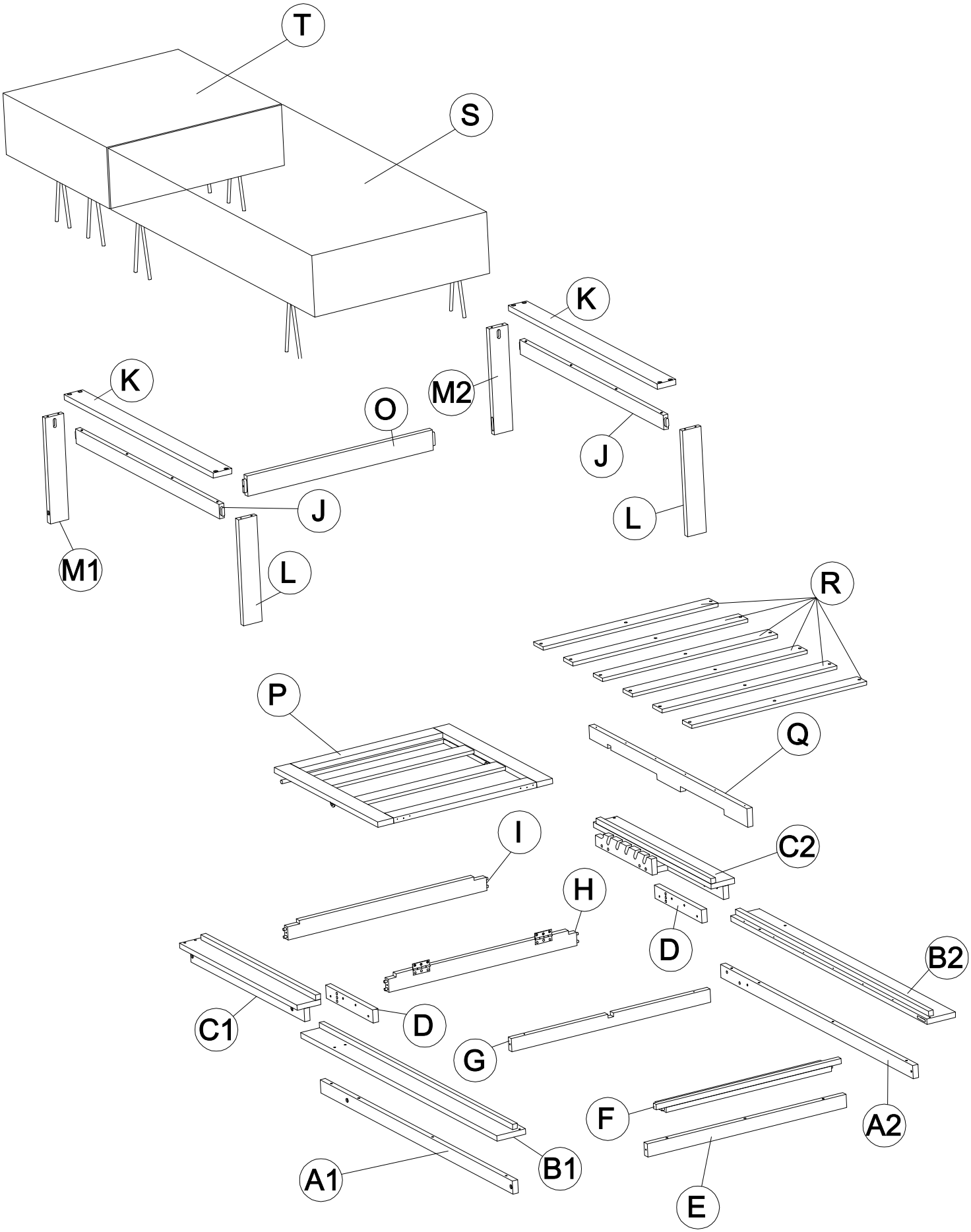
T
S
K
M2
J
L
K
O
J
M1
L
R
P
Q
I
C2
H
D
B2
C1
D
G
F
A2
A1
B1
E

Part List :

A1

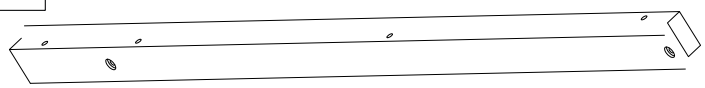

Left Seat Support Bar (1pc)

A2

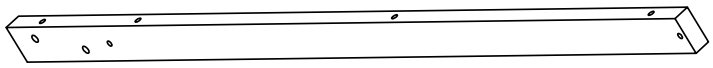

Right Seat Support Bar (1pc)

B1

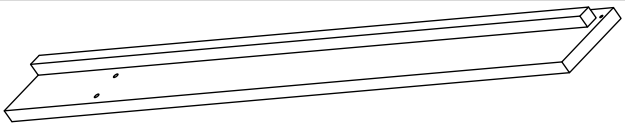

Left Seat Side Bar (1pc)

B2

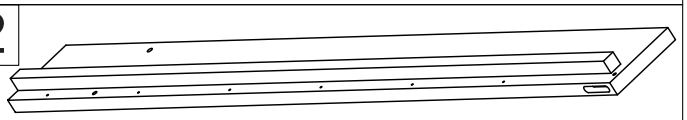

Right Seat Side Bar (1pc)

C1



Left Bracket Adjustment (1pc)

C2

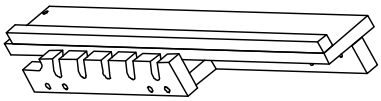

Right Bracket Adjustment (1pc)

D

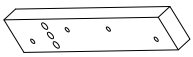

Connecting Bar (2pcs)

E

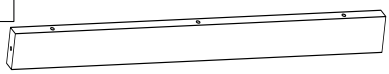

Front Seat Support Bar (1pc)

F



Front Seat Bar (1pc)

G

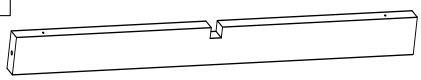

Middle Seat Support Bar (1pc)

H



Seat Support Bar (1pc)

I



Back Seat Support Bar (1pc)

J

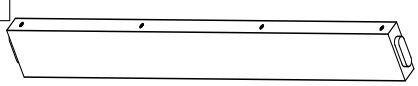

Armrest Support Bar (2pcs)

K

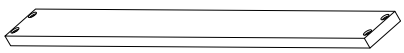

Armrest Bar (2pcs)

L

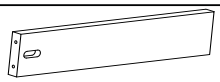

Front Armrest Bar (2pcs)

M1



Left Back Armrest Bar (1pc)

M2

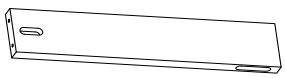

Right Back Armrest Bar (1pc)

O



Connecting Bar (1pc)

P

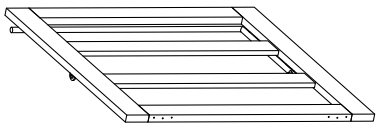

Backrest Frame (1pc)

Q

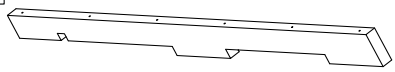

Support Slat (1pc)

R



Slat (6pcs)

S

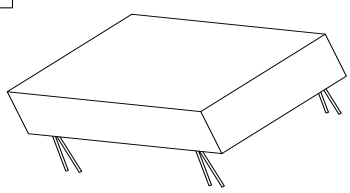

Seat Cushion (1pc)

T

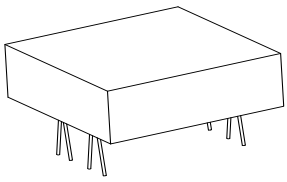

Back Cushion (1pc)

Hardware List :

1 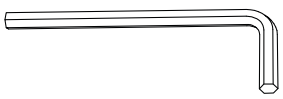 Allen Wrench (1pc) (Extra 1 pc)	2 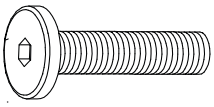 Bolt M6*30 (8pcs) (Extra 1 pc)	3 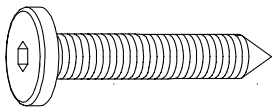 Screw M6*45 (39pcs) (Extra 1 pc)	4 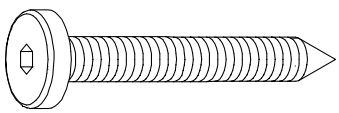 Screw M6*70 (6pcs) (Extra 1 pc)
5 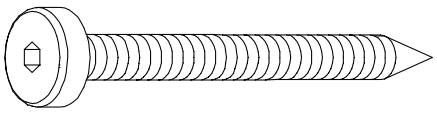 Screw M6*90 (2pcs) (Extra 1 pc)	6  Screw 3.5*15 (6pcs) (Extra 1 pc)	7  Screw 4*25 (20pcs) (Extra 1 pc)	

STEP 1

A1 x1

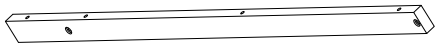

B1 x1

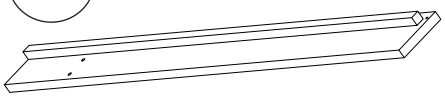

1 x1



3 x4

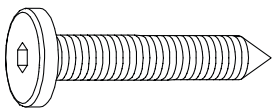

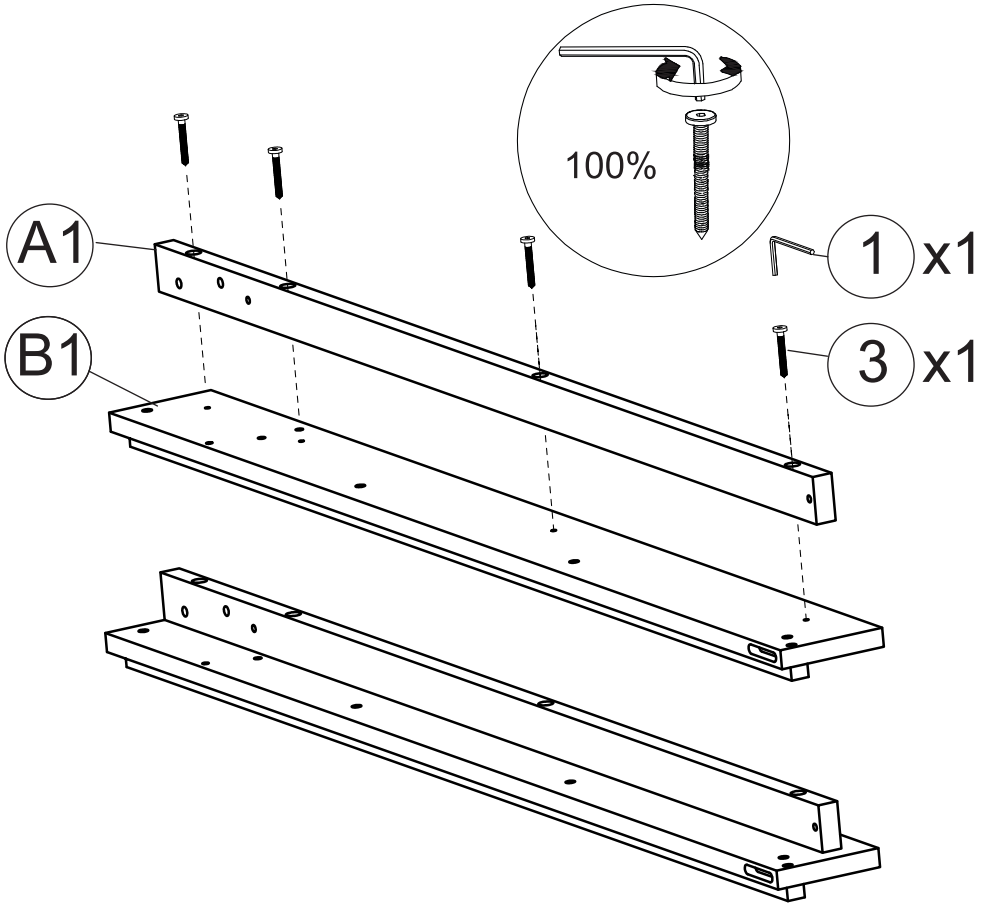

STEP 2

A2 x1

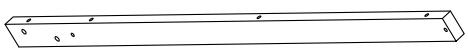

B2 x1



1 x1



3 x4

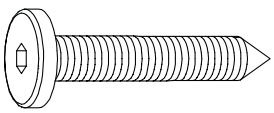

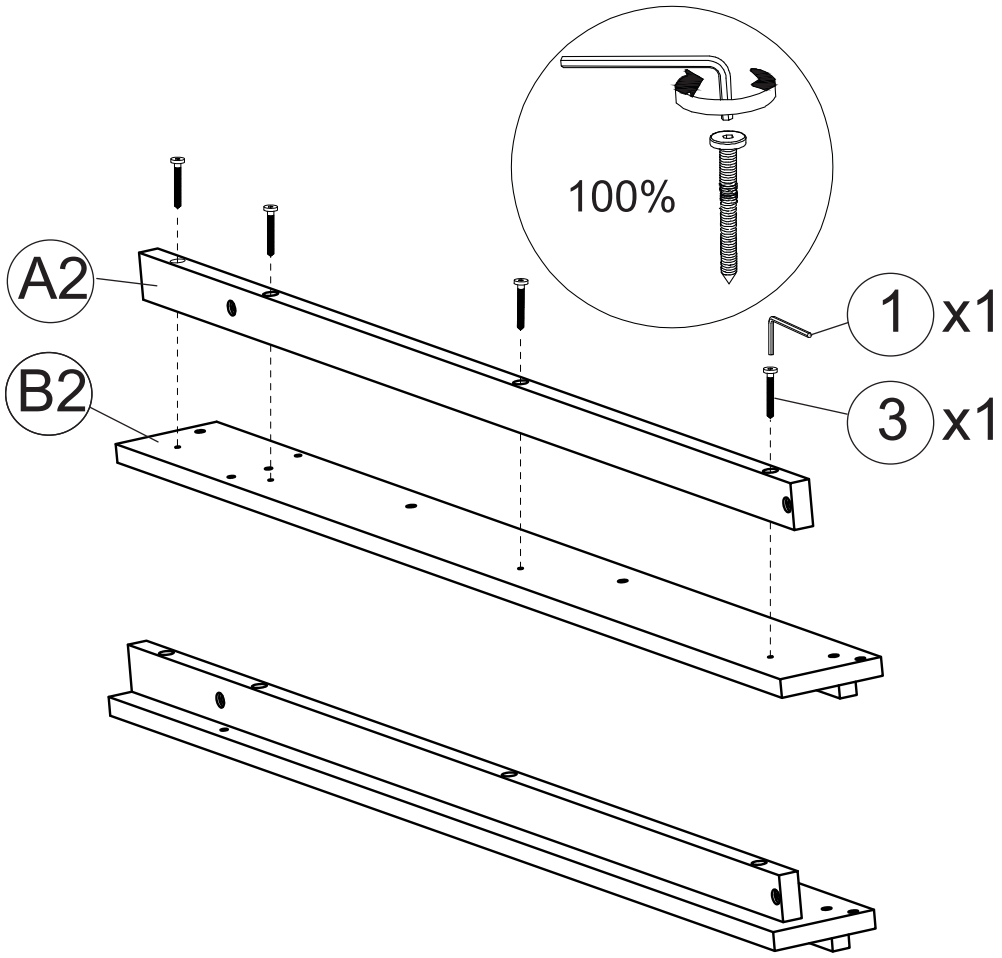

STEP 3

C1 x1

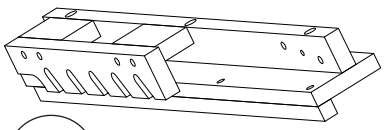

D x1

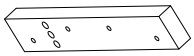

1 x1



2 x4

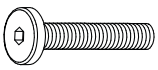

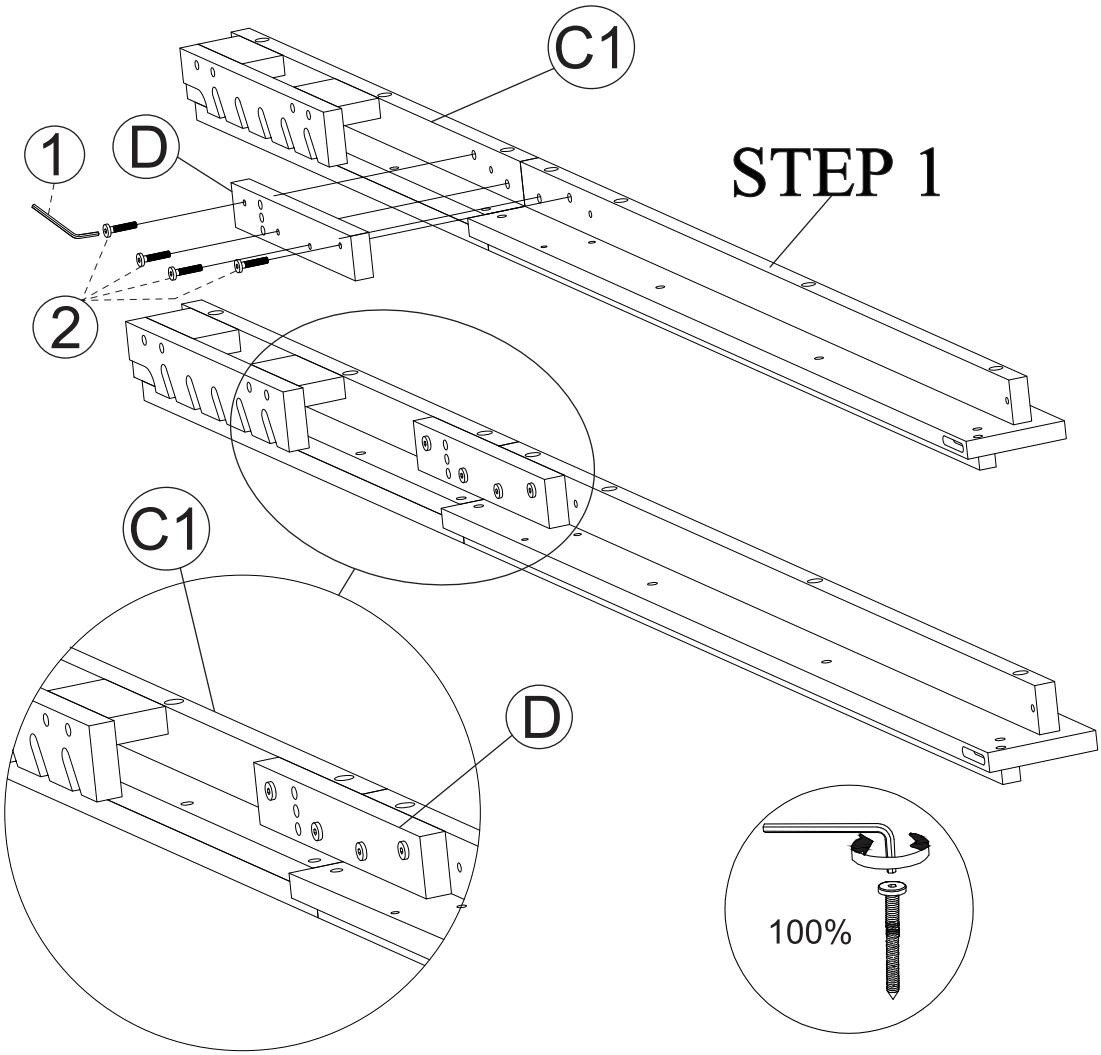

STEP 1

STEP 4

C2 x1

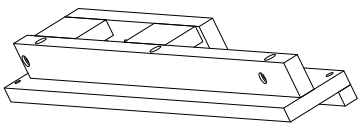

D x1

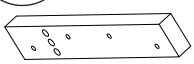

1 x1



2 x4

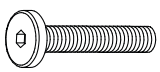

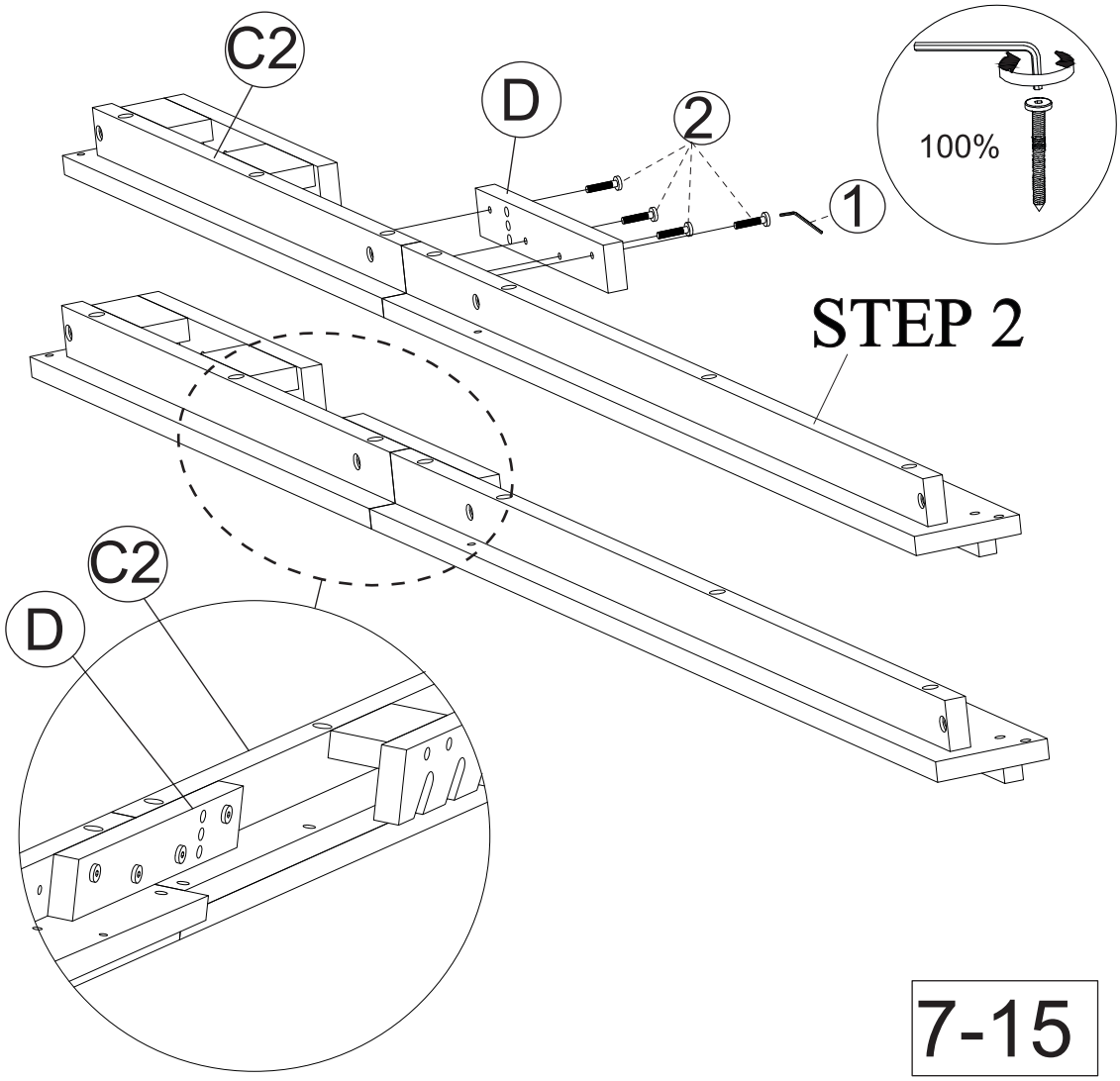

STEP 2

STEP 5

E x1



F x1



① x1



③ x3

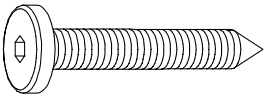

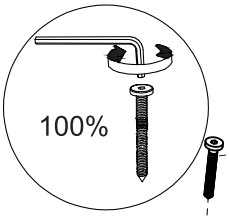

STEP 6

G x1

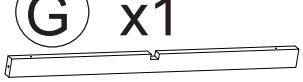

H x1



I x1



① x1



③ x6

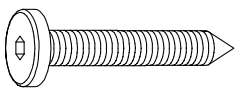

④ x2

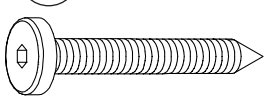

⑦ x2

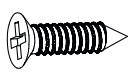

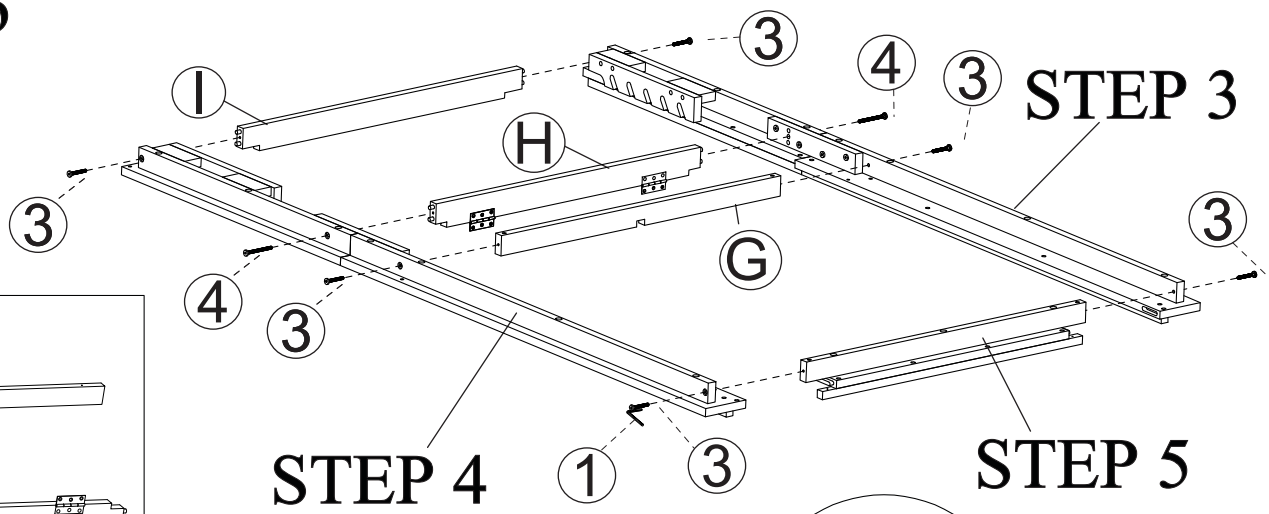

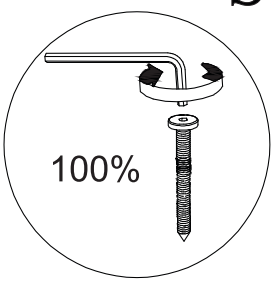

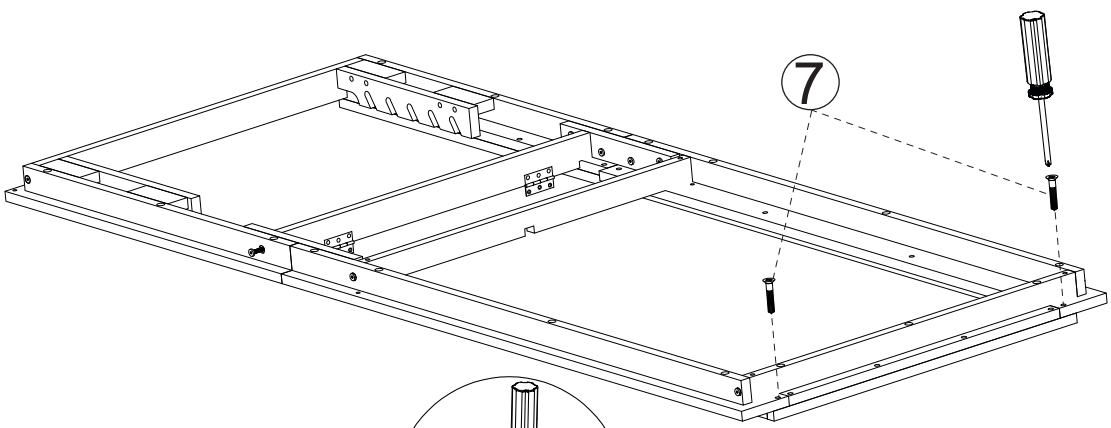

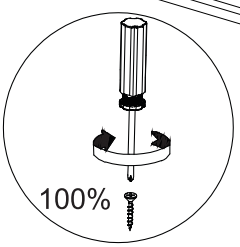

STEP 7

J x2



K x2



1 x1



3 x8

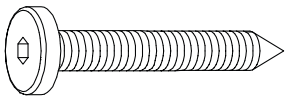

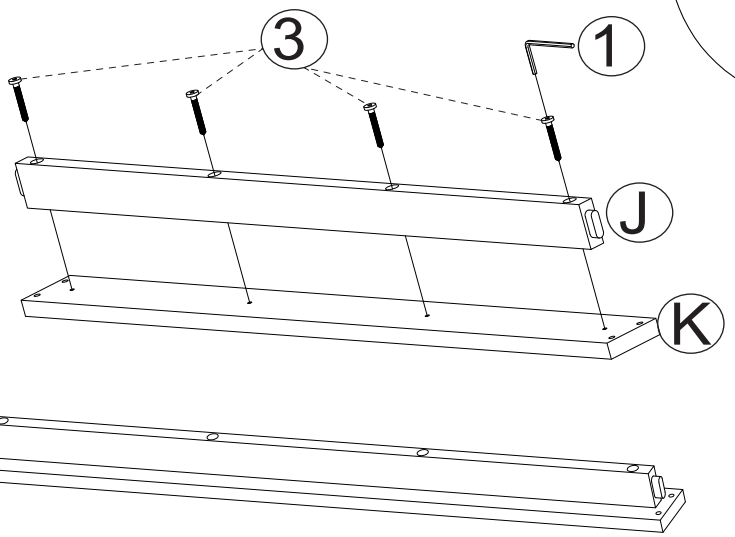

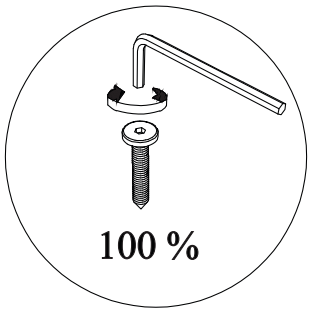

X2

STEP 8

L x2

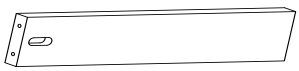

M1 x1

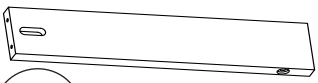

M2 x1



1 x1



3 x8

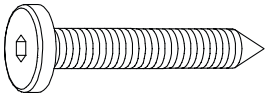

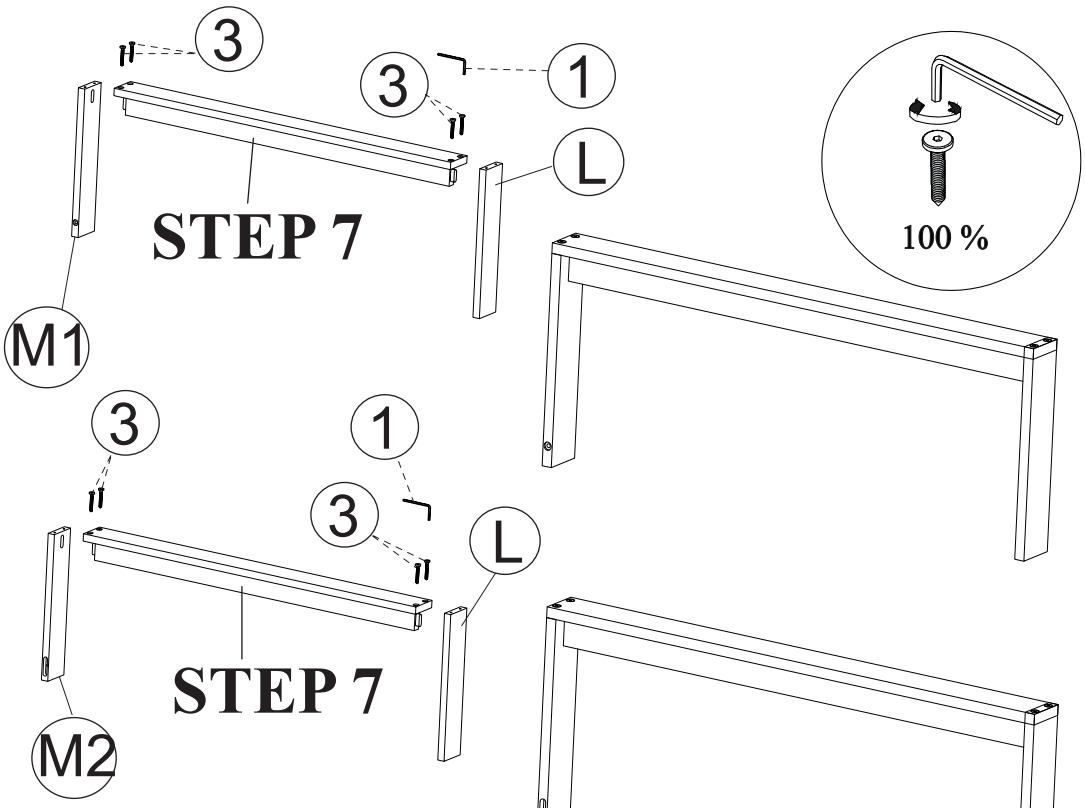

STEP 9

O x 1



1 x1



5 x2

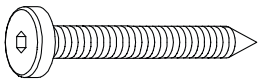

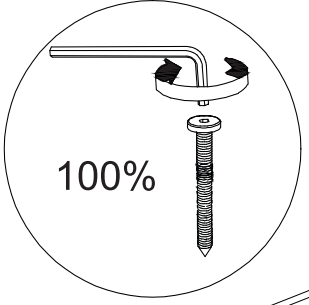

STEP 8

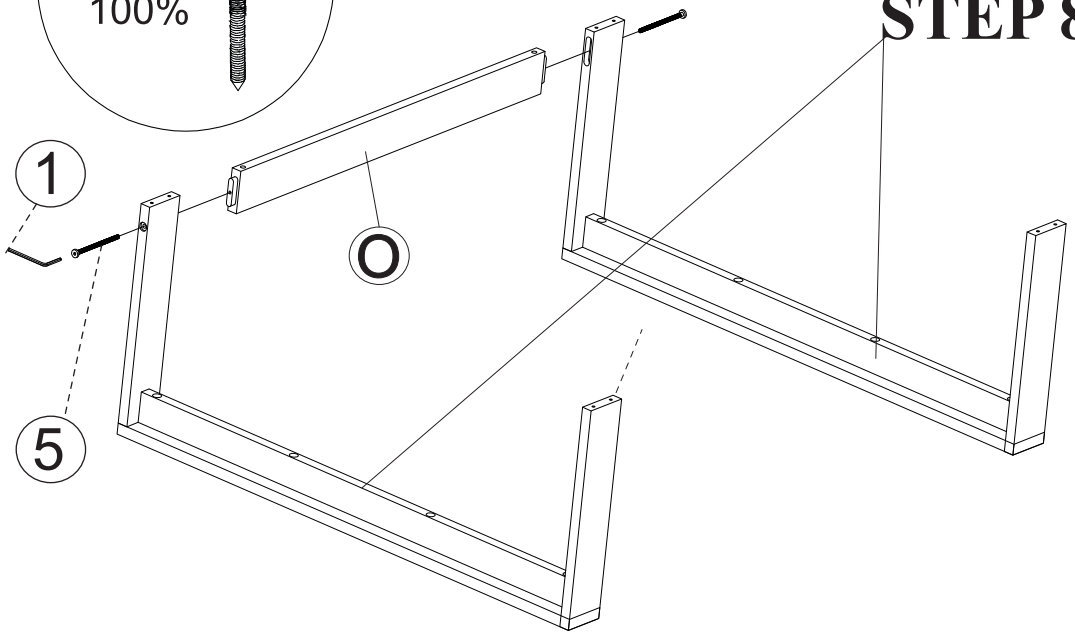

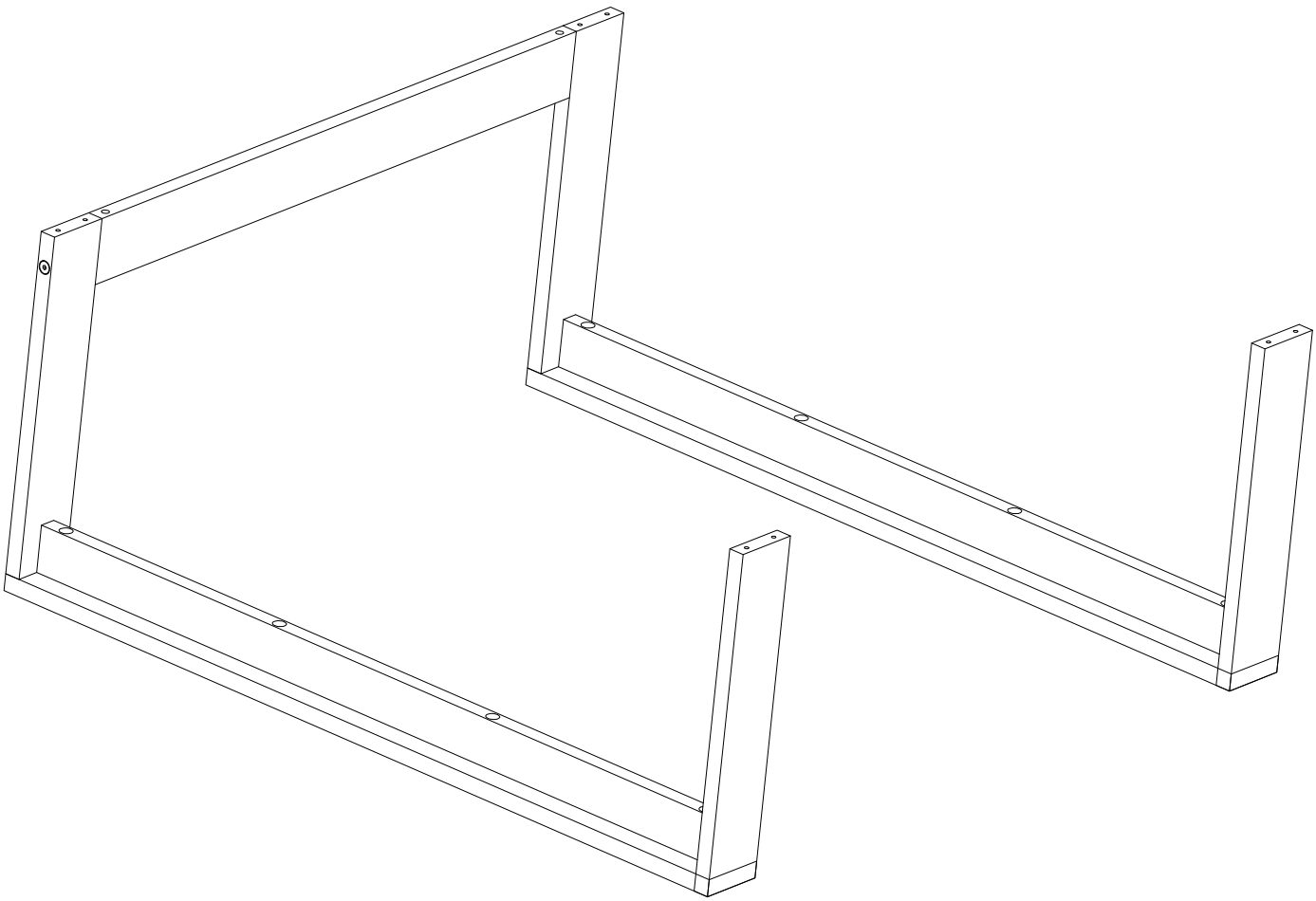

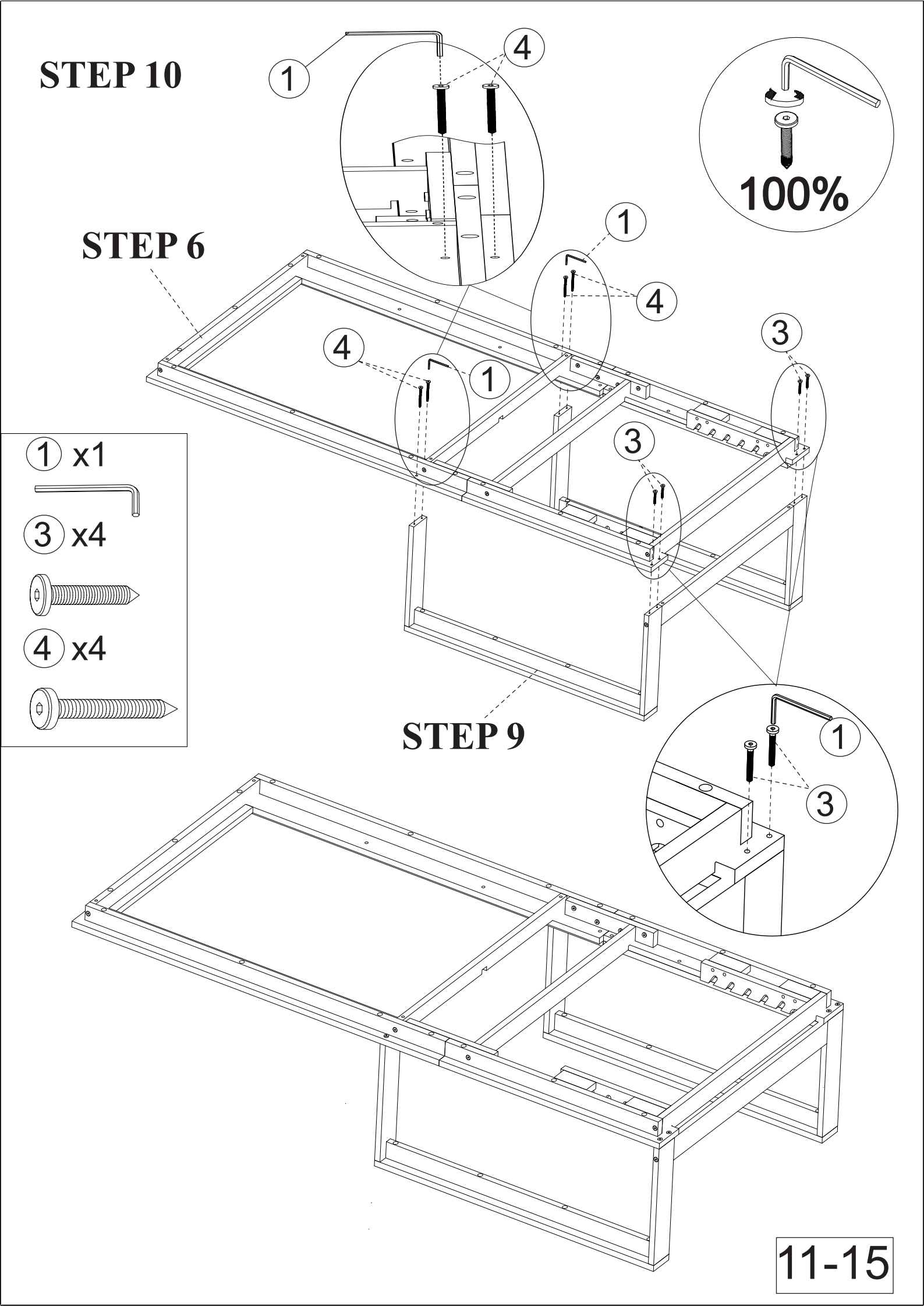
STEP 10
1
4
100%
STEP 6
1
4
4
1
3
3
1 x1
3 x4
4 x4
STEP 9
1
3
11-15

STEP 11

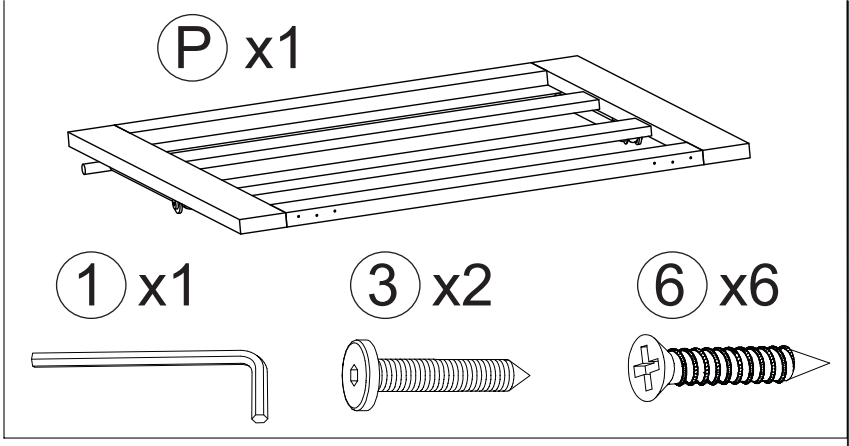

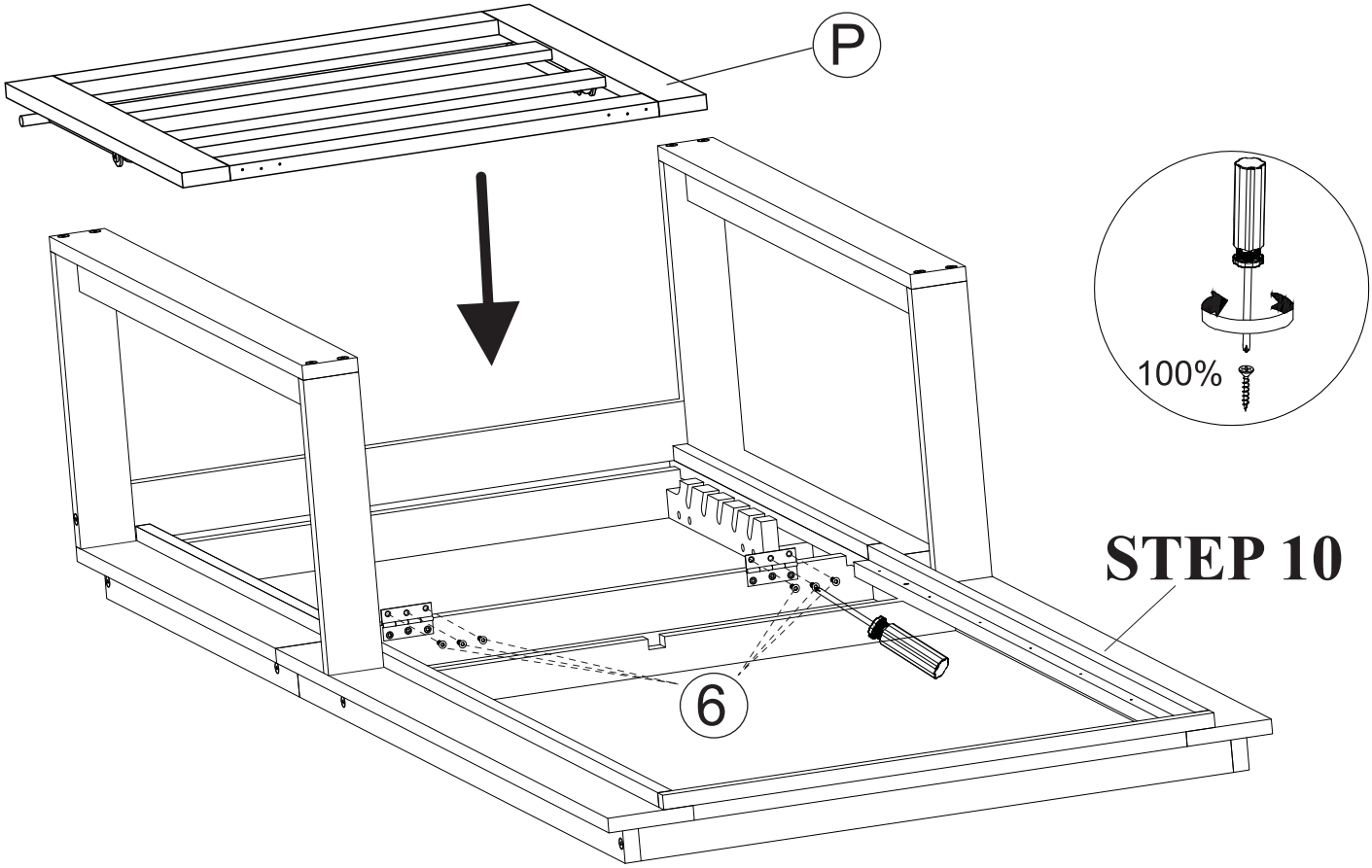

STEP 10

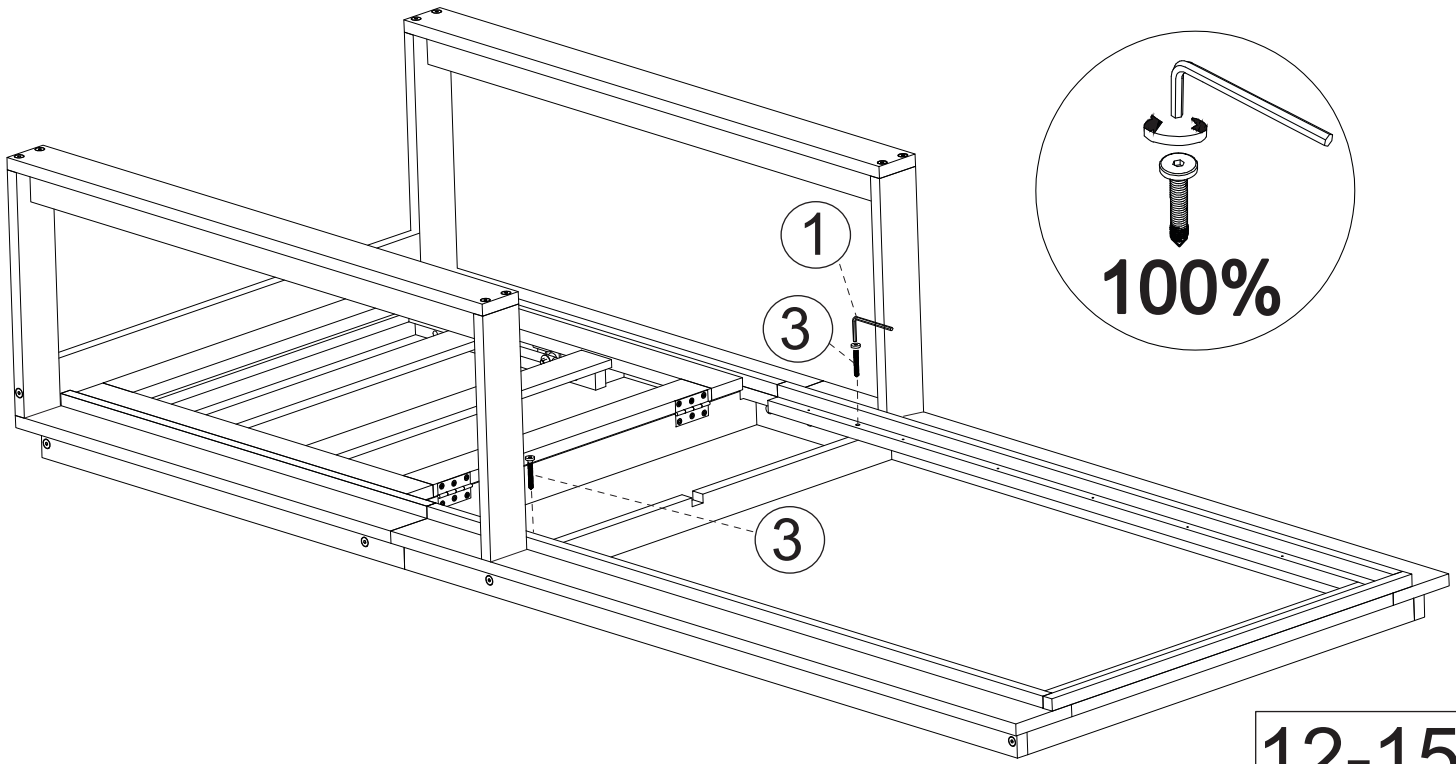

STEP 12

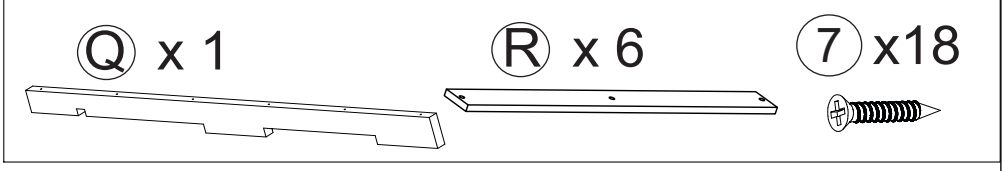

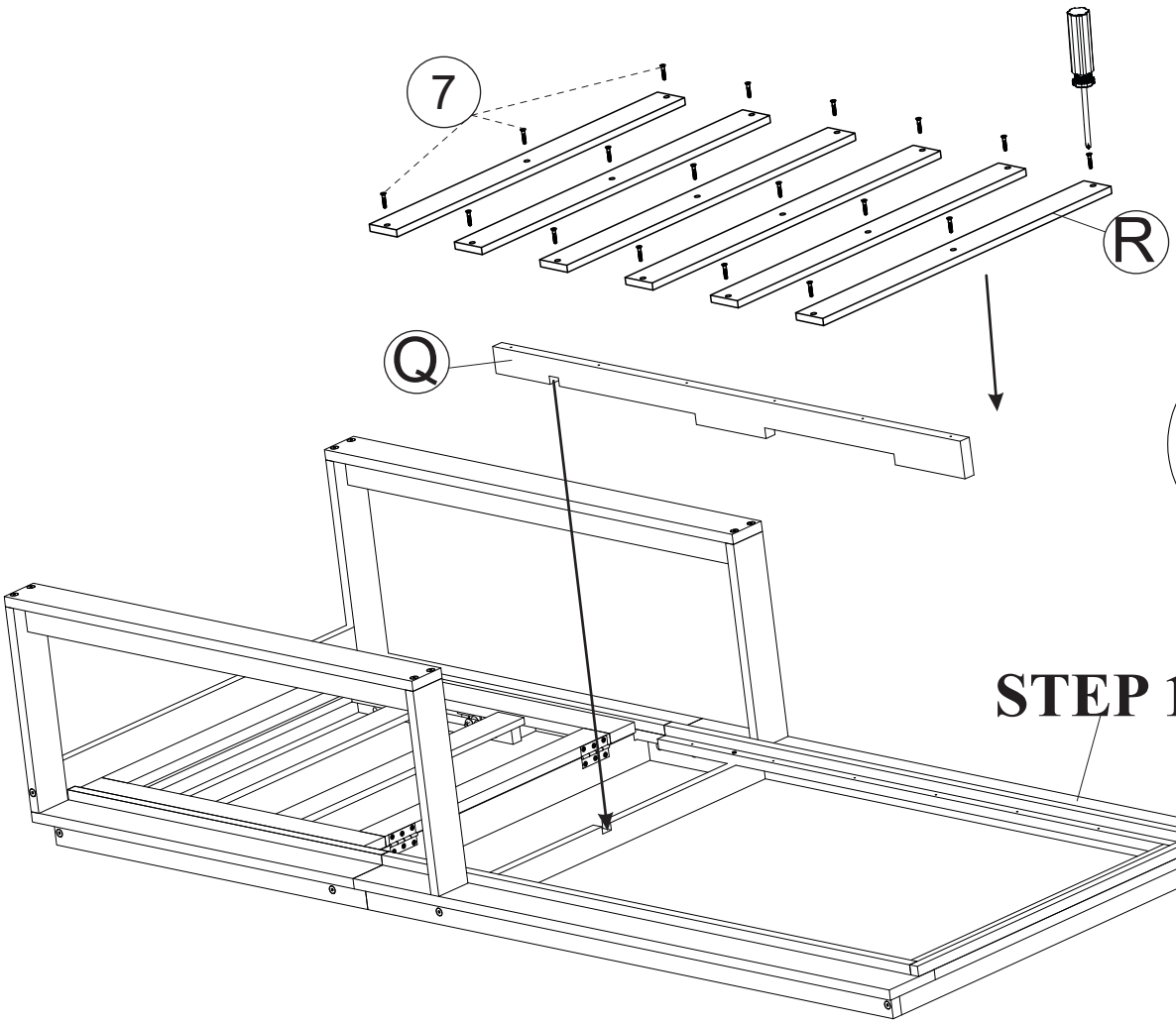

STEP 11

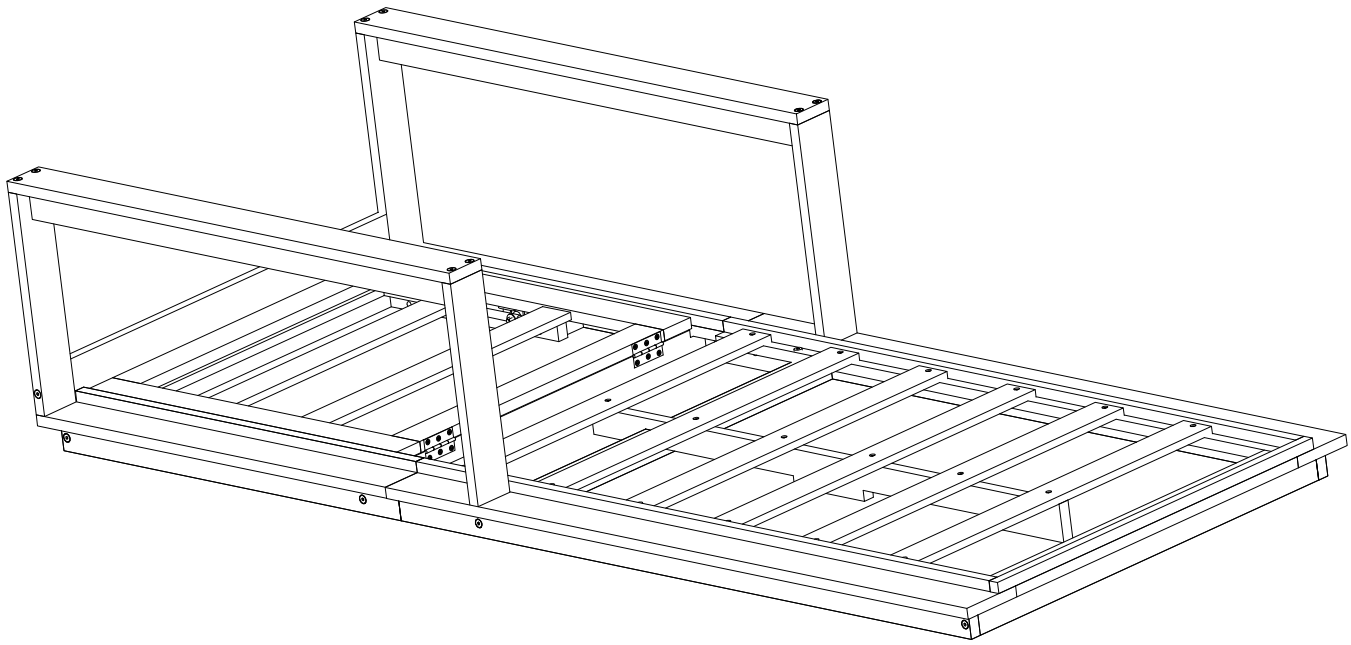

STEP 13

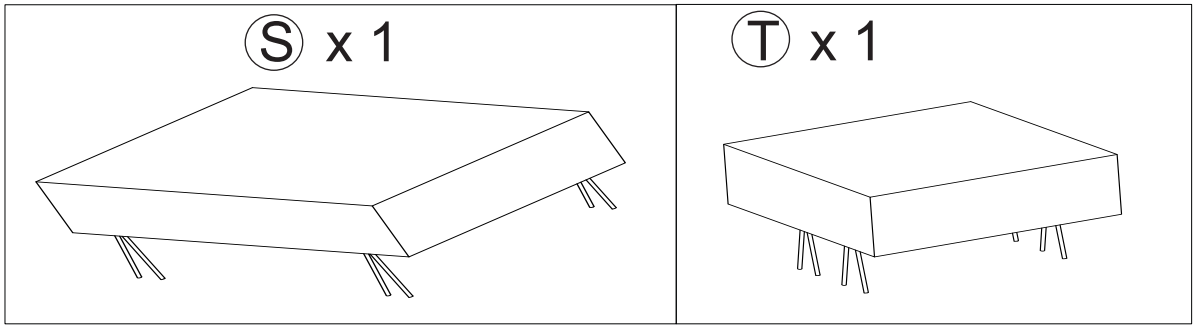

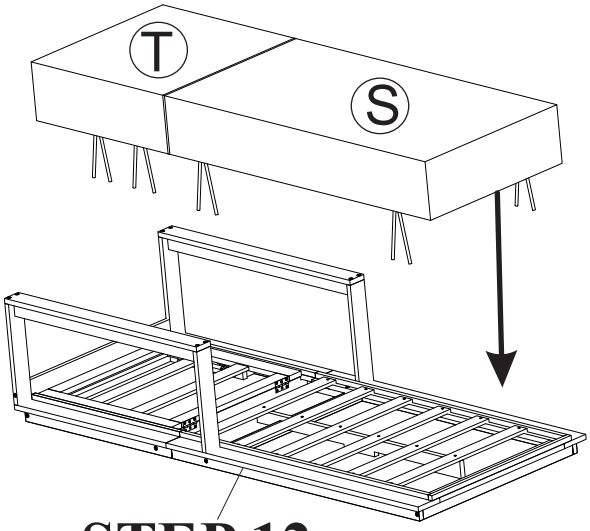

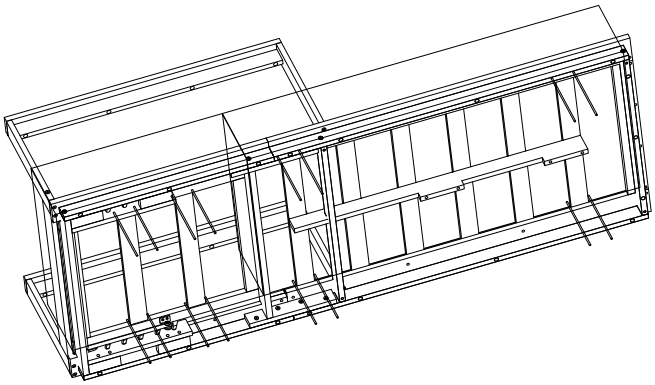

STEP 12

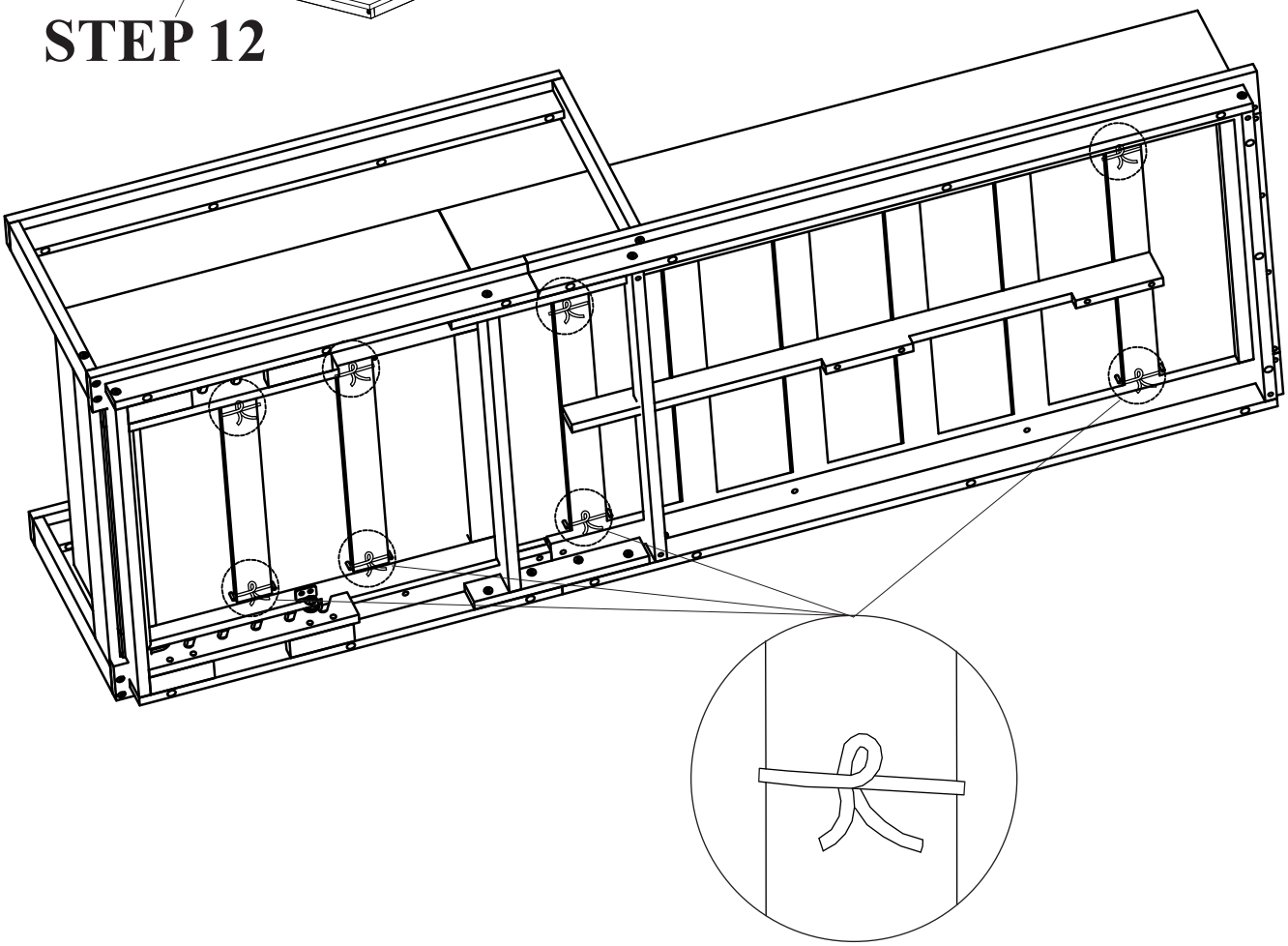

STEP 14

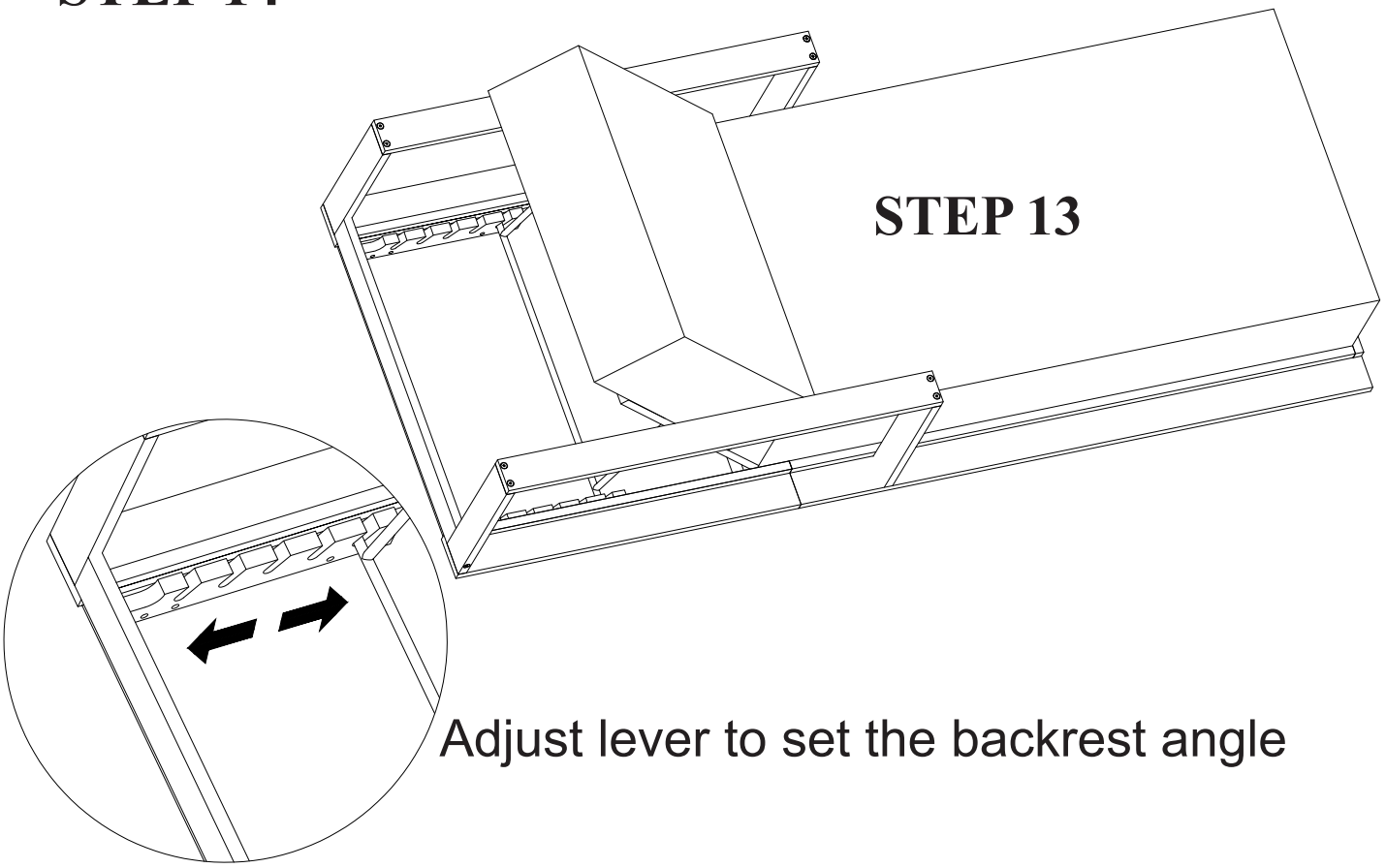

Adjust lever to set the backrest angle

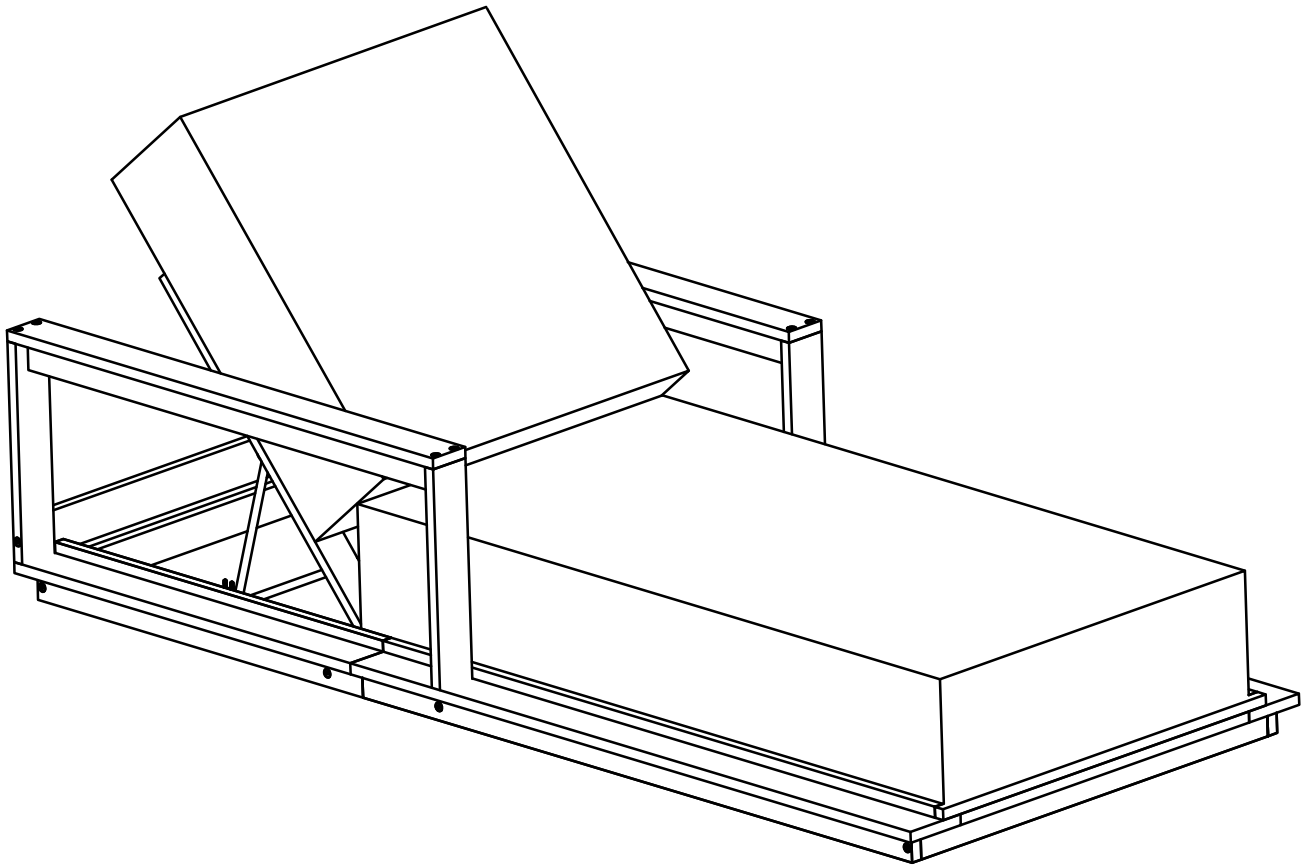

FINISH