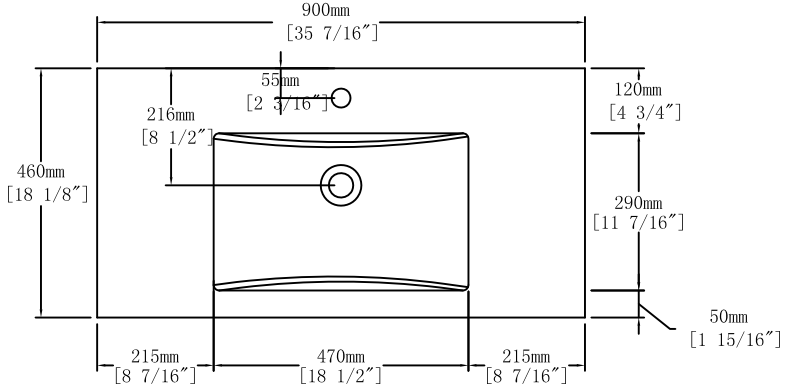

Top View

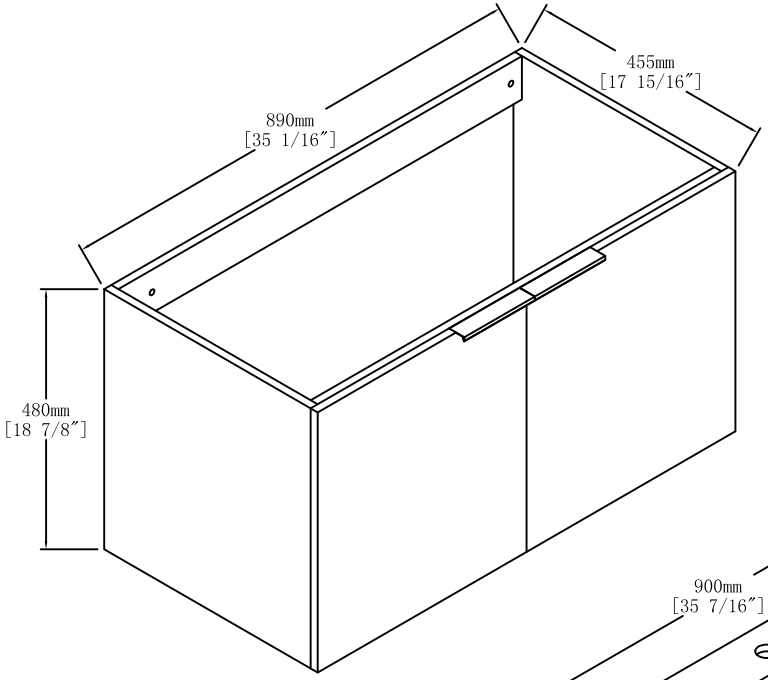

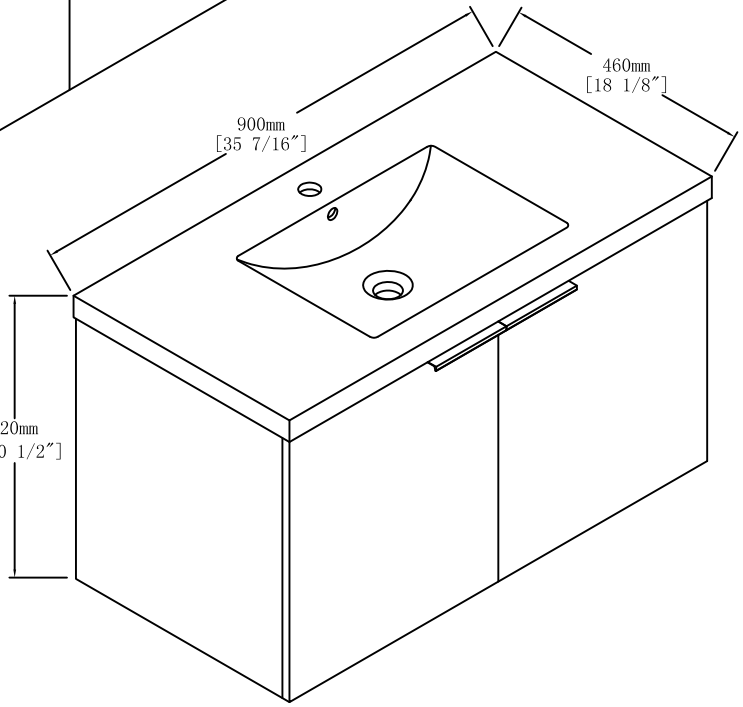

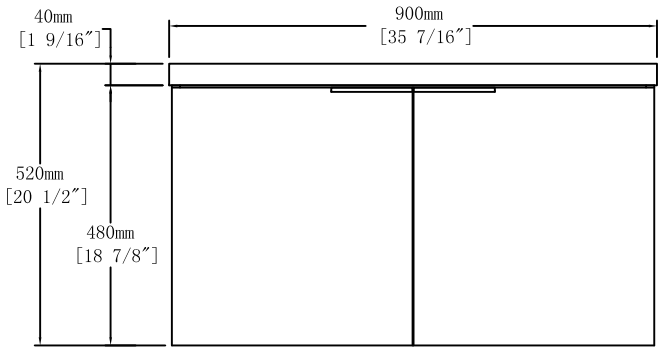

Front View

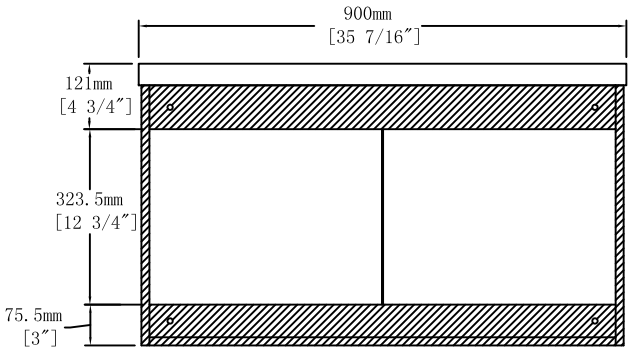

Back View

	Item NO.	BV B09036	Version	V1
	Project		Date	2024-2-21