Murphy bed
Installation product manual

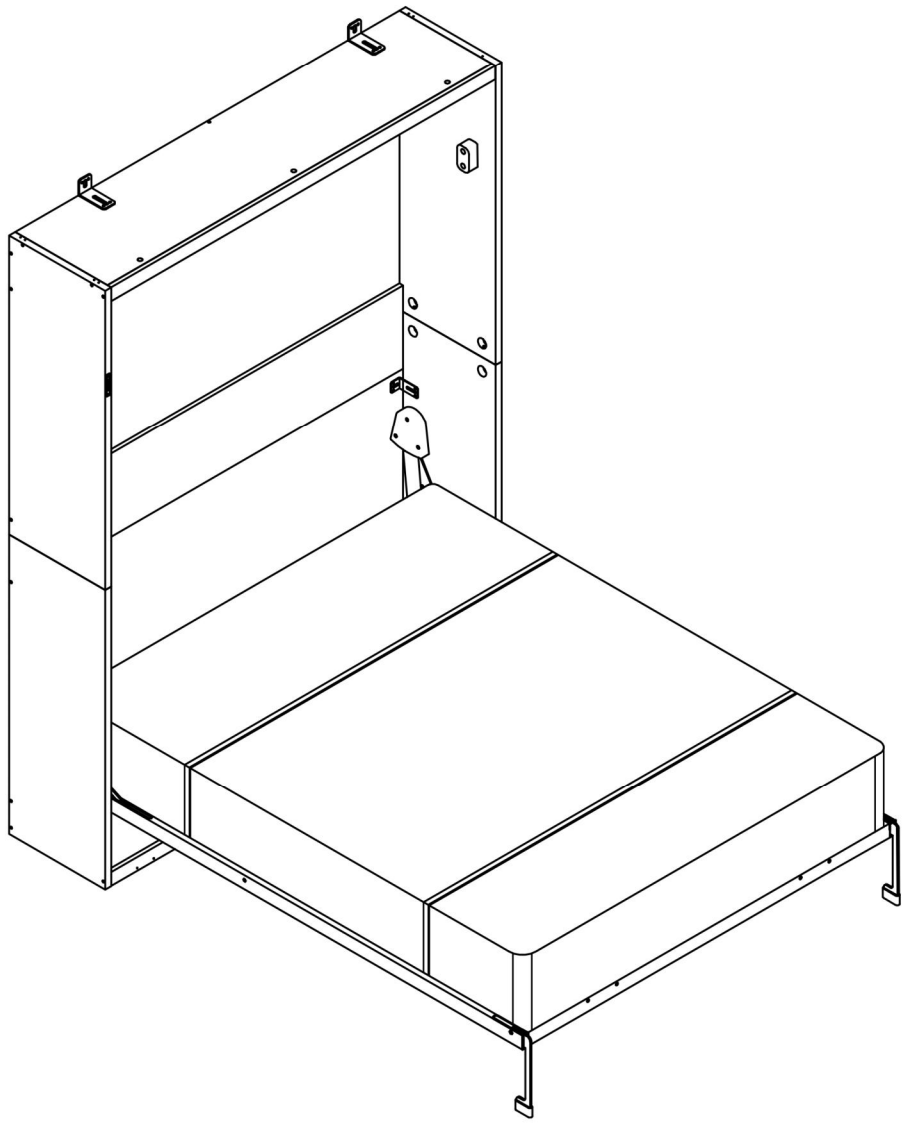

Assembly Instruction

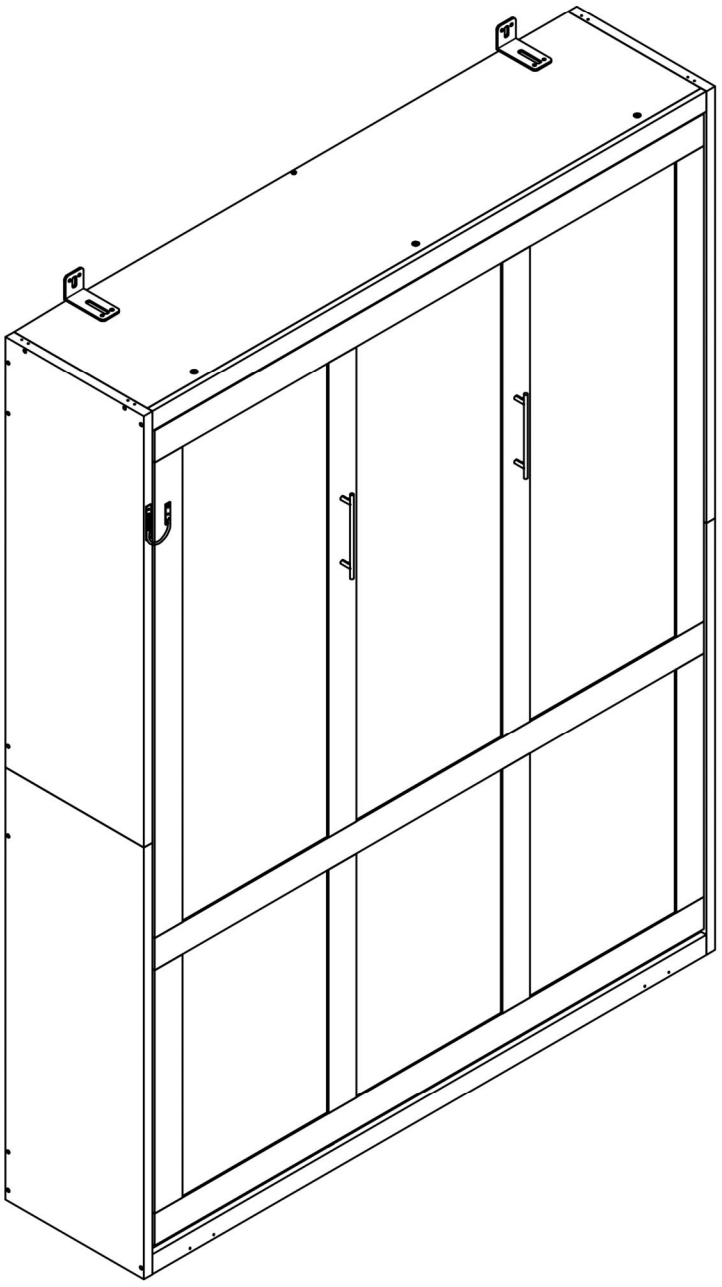

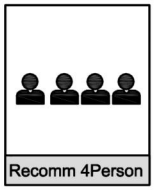
Recomm 4Person

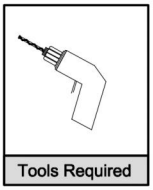
Tools Required

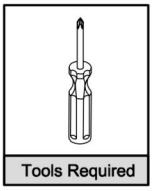
Tools Required


Tools Required


Tools Required


Recommended for professional Installation

All rights reserved.

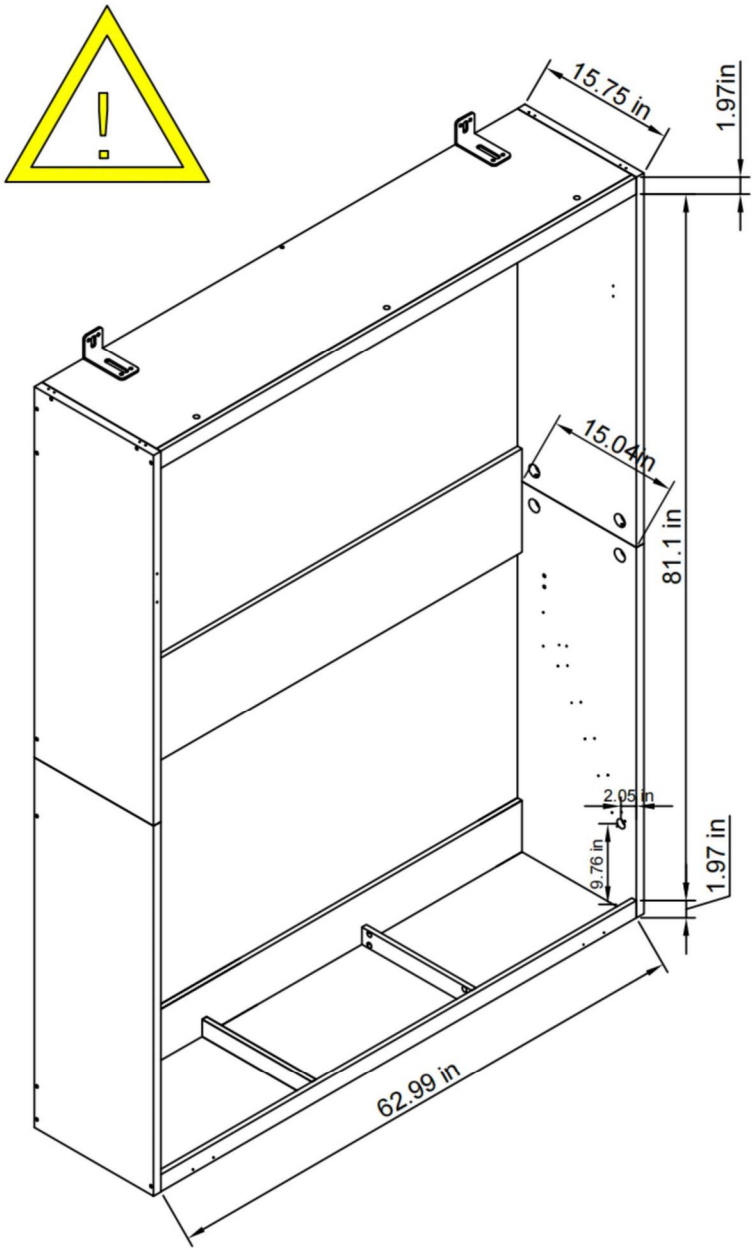

Decorative door panel：
W62.36xD0.591xH80.31 inches

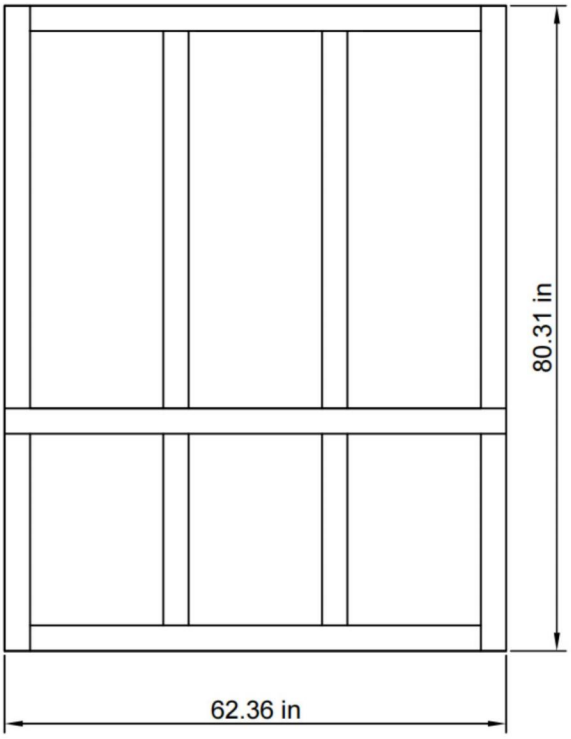

If you choose to DIY the cabinet when just bought our murphy bed hardware kit, Pleasepay attention to the following keys for cabinet
dimension datas and requirements:

1.The internal dimensions of cabinet should be accurate reserved to:
W62.99xD14.961xH81.102 inches;

2.The total dimension of cabinet door panel (divided into 3-4 pieces to be made):
W62.36xD0.591xH80.31 inches;

3.The baseboard height which from the ground to inside cabinet: 1.97 inches;

The cabinet must be fixed to the wall using the matched corner brackets and expansion screws.

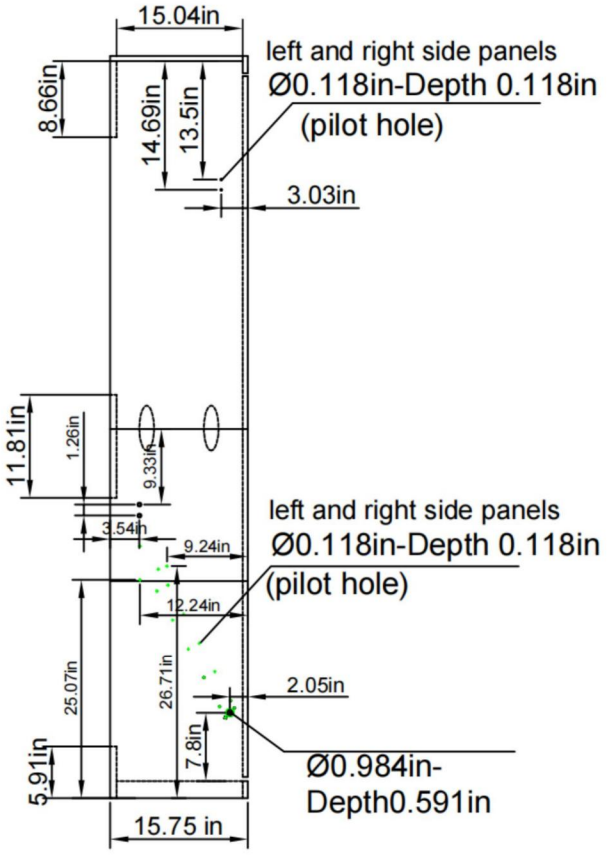

All rights reserved.

The maximum width of the mattress that the bed frame wil fit is 60inch, the maximum length is 80inch, and the maximum thickness is 10inch. Suggested Mattress Size:Queen, Suggested Mattres Thickness: 8inch. (please note that the mattress weight less than 80lbs may cause the feet of the bed frame are off the ground)

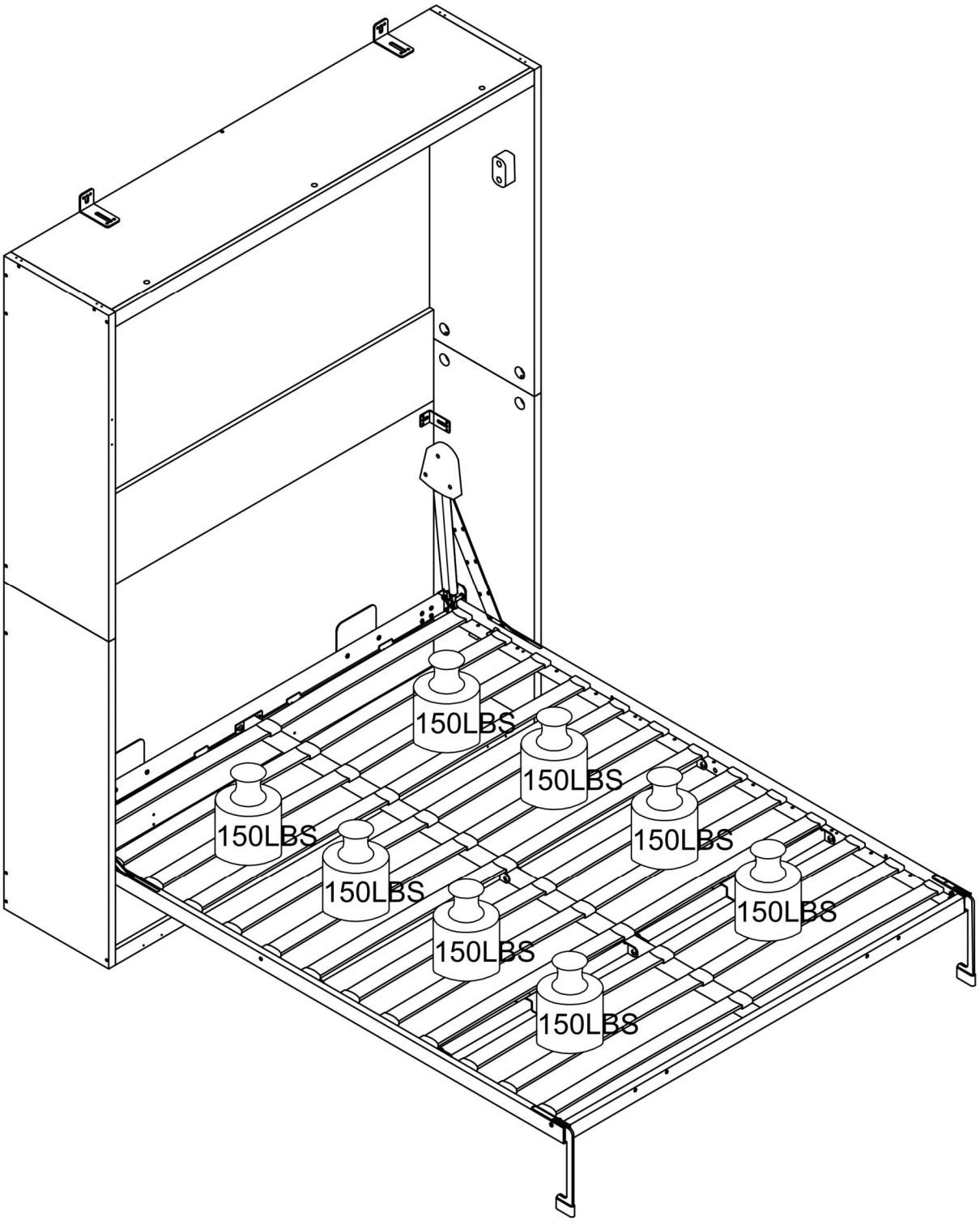

All rights reserved.

WARNING

Recommended Maximum Weight

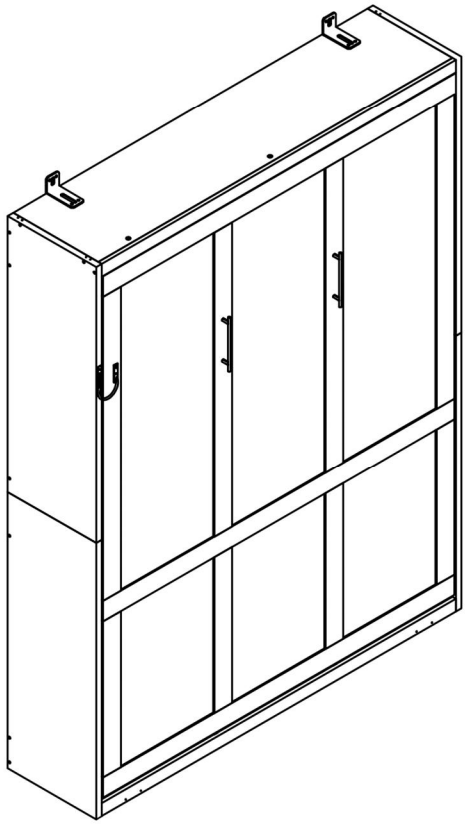

Read all instructions before using this product.

1. This unit has been designed to support the maximum loads shown. Exceeding these load limits could cause sagging, instability, product collapse, and/or serious injury.
2. Avoid sharp objects and corrosive chemicals to prevent damage to the product or bodily injury.
3. Not intended for use in humid environment to prevent mildew, such as bathrooms, laundry areas and similar indoor locations.Do not use outdoors.
4. Don't allow anybody stand or climb on the unit. Serious or fatal crushing injuries can occur from furniture tip over. To prevent tip over this furniture must be used with the wall attachment devices provided.

Useful Hints before you start:

1. Place soft packaging material on the floor to protect surface of product during assembly work.
2. It is important that each step is performed in correct order to avoid difficulties.
3. Align all screws with corresponding pre-drilled holes first and tighten.
4. Screws may become loose during long-term use, retighten them to ensure stability and security.
5. Using uncompatible hardware might cause damage to product.

All rights reserved.

parts

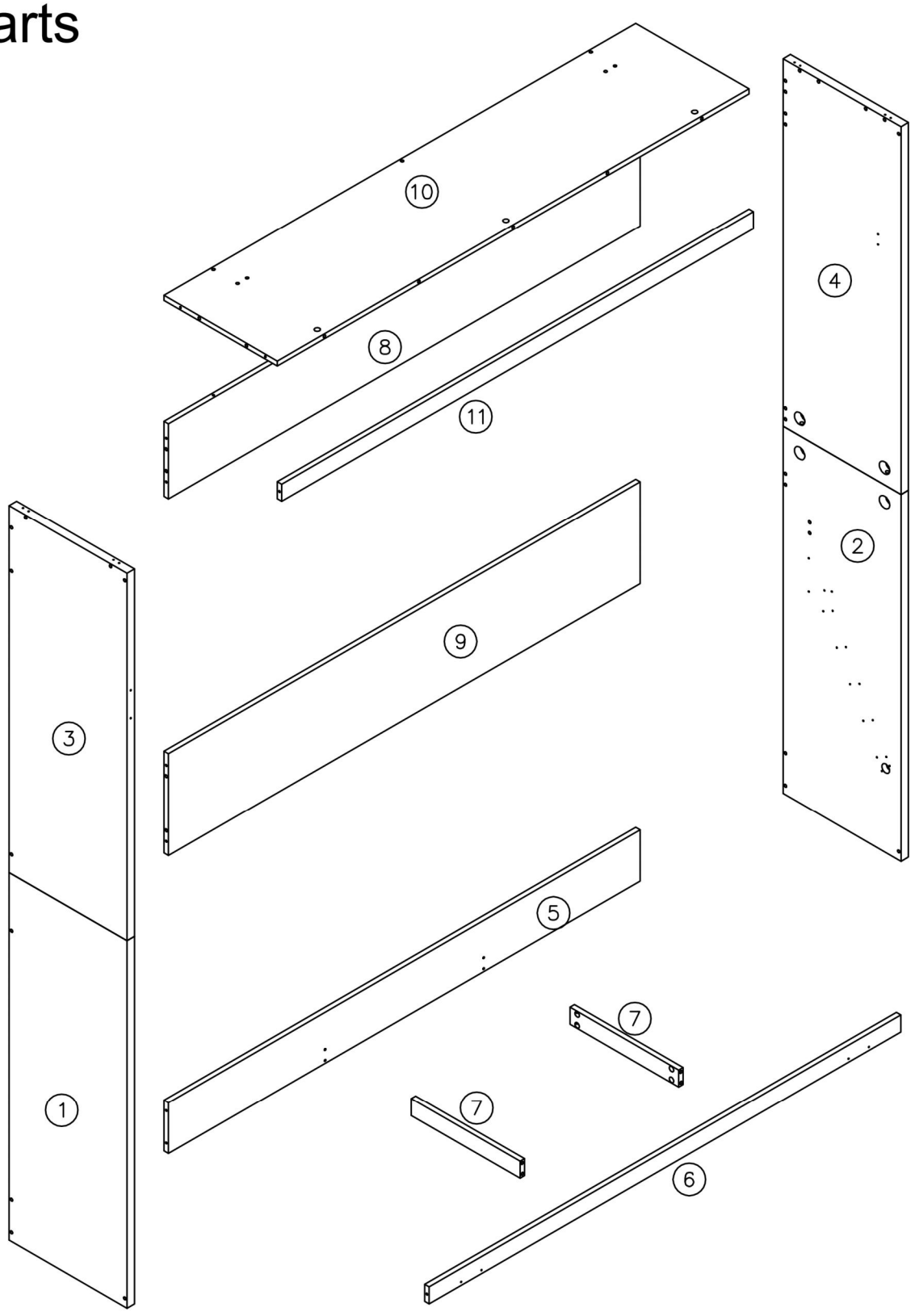

WARNING:

To avoid causing unnecessary troubles,
Please check whether the components with corresponding numbers are installed correctly according to the diagram.

All rights reserved.

parts

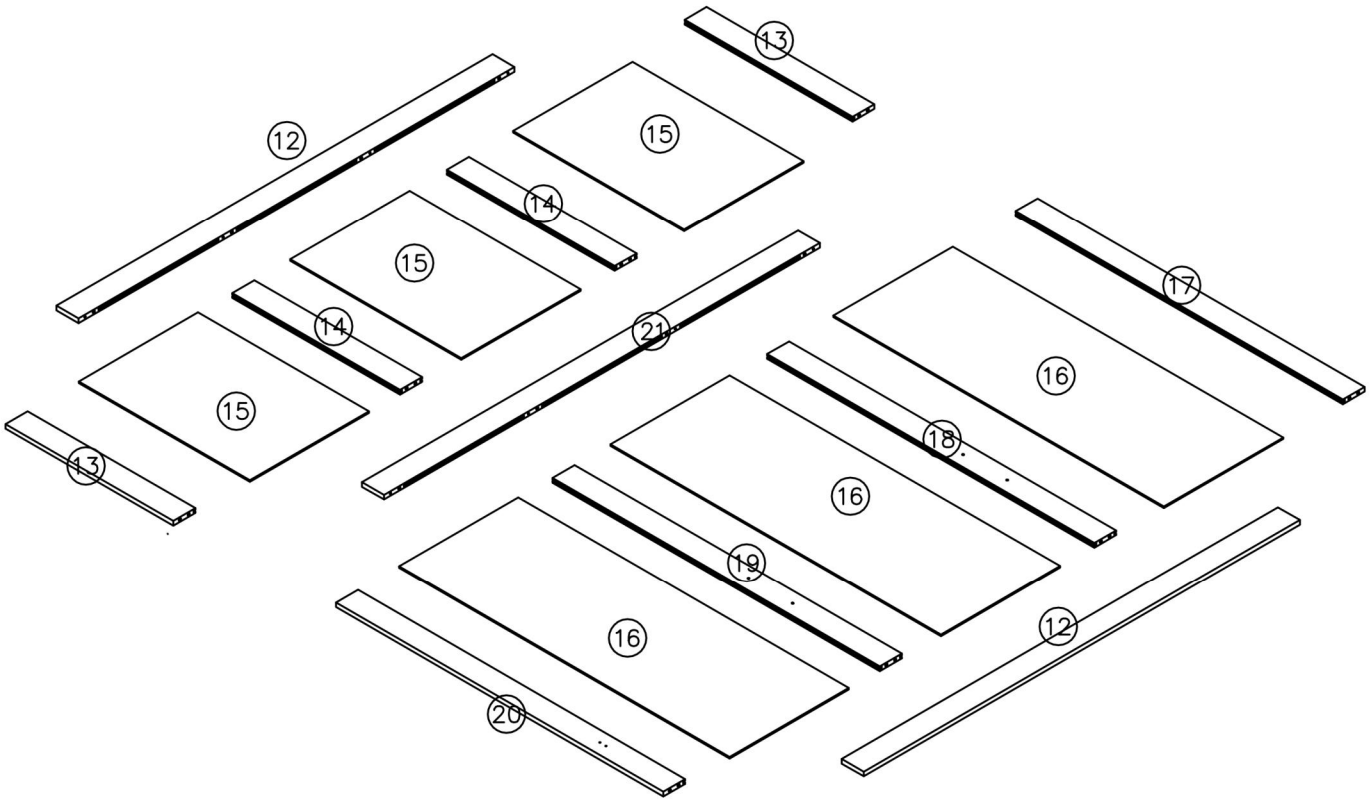

WARNING:

To avoid causing unnecessary troubles,
Please check whether the components with corresponding numbers are installed correctly according to the diagram.

All rights reserved.

parts

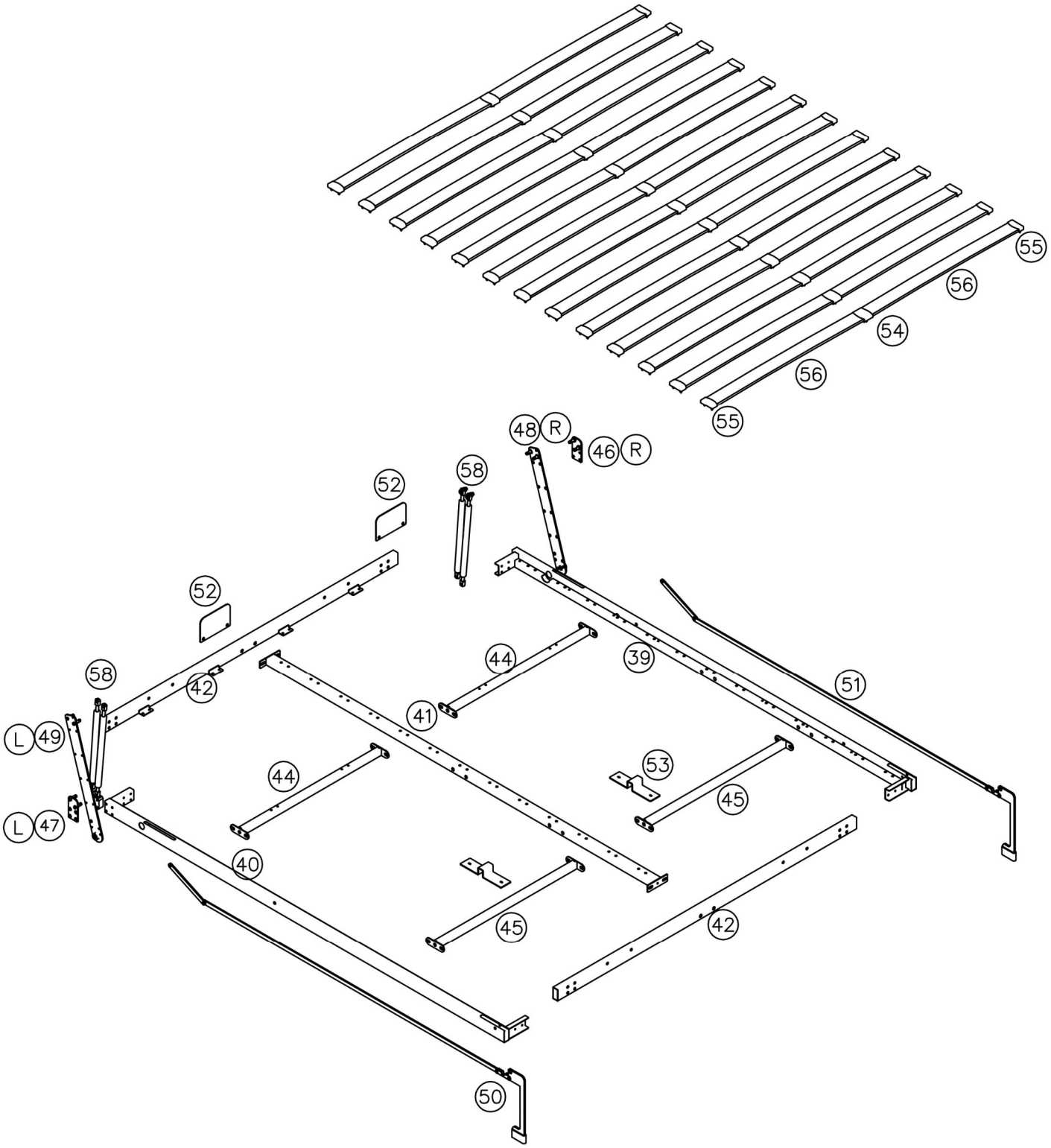

WARNING:

To avoid causing unnecessary troubles,
Please check whether the components with corresponding numbers are installed correctly according to the diagram.

All rights reserved.

BOX:W5290P536626

① 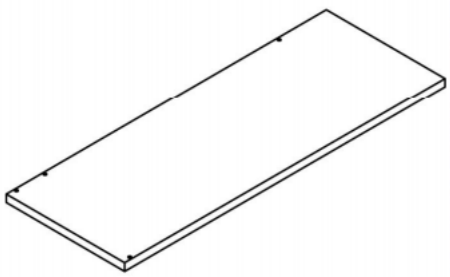 1080X400X25=1PC	② 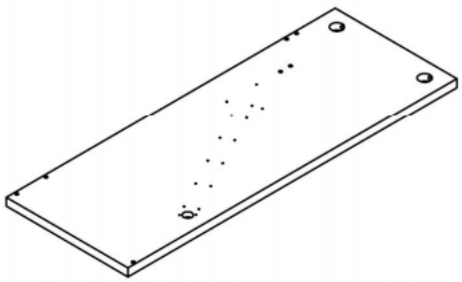 1080X400X25=1PC	③ 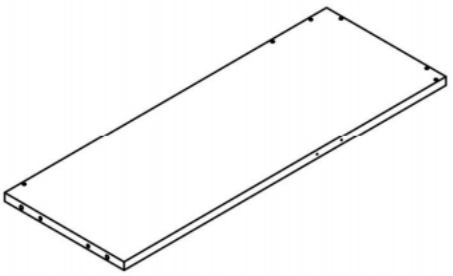 1080X400X25=1PC
④ 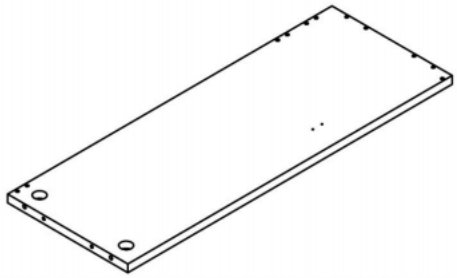 1080X400X25=1PC	⑮ 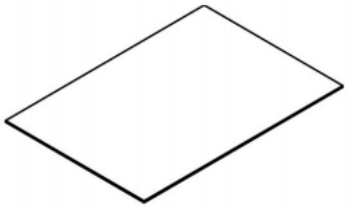 622X434X5=3PCS	⑯ 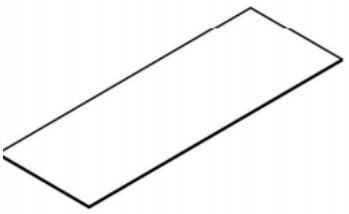 1202X434X5=3PCS

All rights reserved.

BOX:W5290P536626

Ⓐ 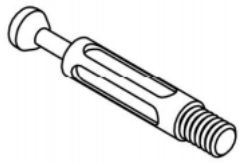 Φ7*32=27+2PCS	Ⓑ  Φ15*11.5=27+2PCS	Ⓒ1 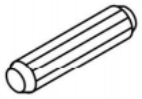 Φ8*30=32+2PCS
Ⓒ2 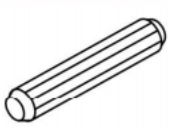 Φ8*50=4PCS	Ⓓ1  Φ7*40=3PCS	Ⓓ2 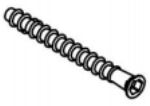 Φ7*60=20+1PCS
Ⓔ1  =2PCS	Ⓔ2  =4PCS	Ⓕ  =1PC
Ⓚ 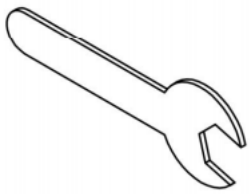 2PCS	Ⓖ1 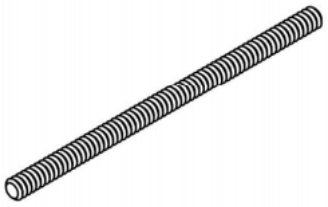 M8*100=4PCS	Ⓖ2  =8PCS
Ⓖ3  M8=8PCS	Ⓖ4 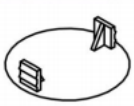 Φ35=8PCS	Ⓗ1 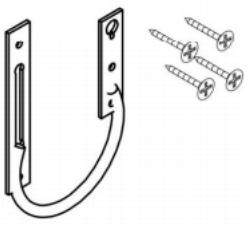 =1PC

All rights reserved.

BOX:W5290P536625

⑤ 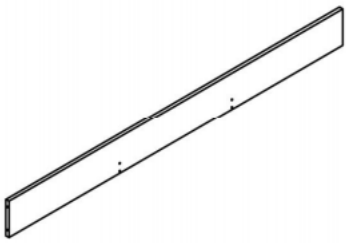 1600X150X15=1PC	⑥ 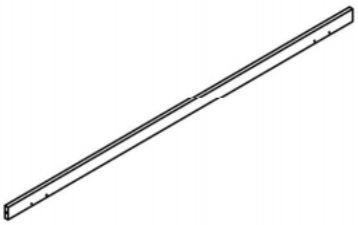 1600X50X15=1PC	⑦ 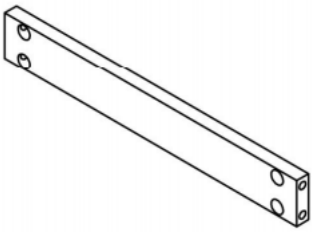 369X50X15=2PCS	⑧  1600X220X15=1PC
⑨ 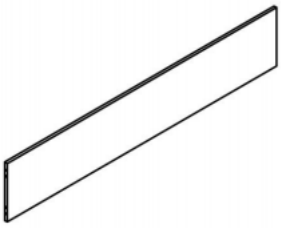 1600X300X15=1PC	⑩ 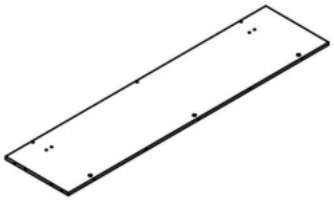 1600X385X15=1PC	⑪  1600X50X15=1PC	⑫ 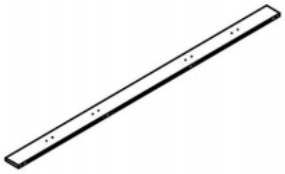 1586X80X15=2PCS
⑬  610X80X15=2PCS	⑭  610X80X15=2PCS	⑰ 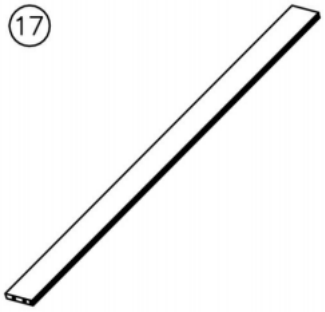 1190X80X15=1PC	⑱  1190X80X15=1PC
⑲  1190X80X15=1PC	⑳ 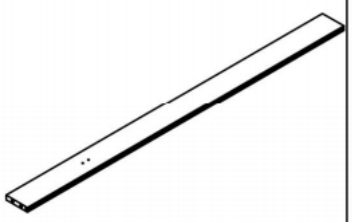 1190X80X15=1PC	㉑ 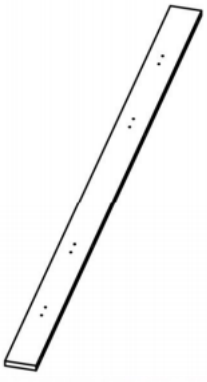 1586X80X15=1PC	

All rights reserved.

BOX: W5290P457894

39

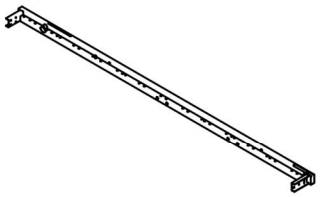

2040X125X50=1PC

40

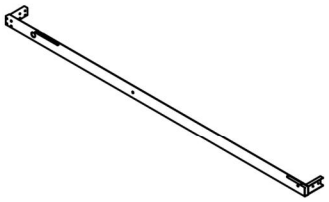

2040X125X50=1PC

41

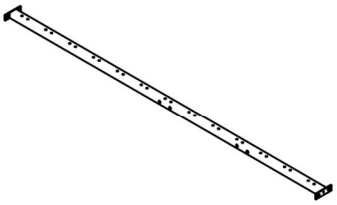

1986X100X30=1PC

42

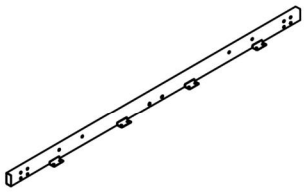

1535X50X49=2PCS

44

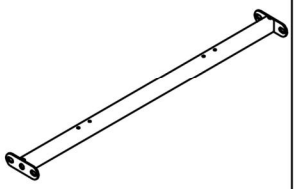

723X100X30=2PCS

45

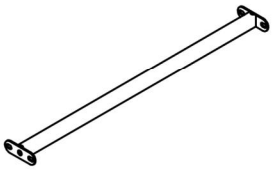

723X100X30=2PCS

46 R



93X45X33=1PC

47 L

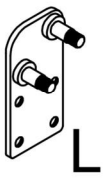

93X45X33=1PC

48 R

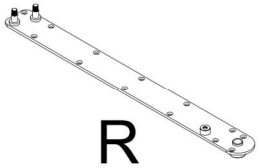

500X50X33=1PC

49 L

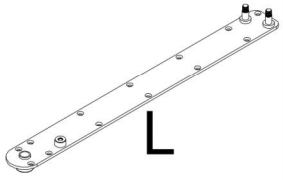

500X50X33=1PC

50

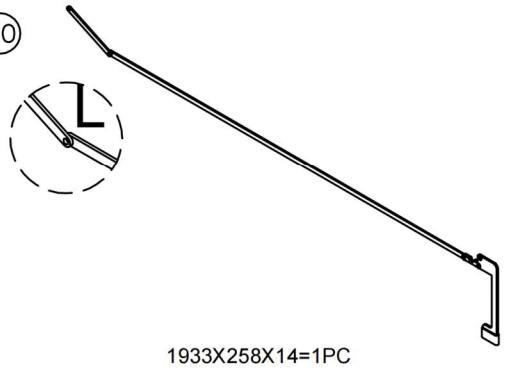

1933X258X14=1PC

51

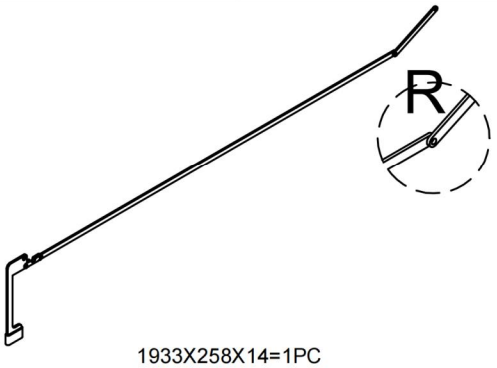

1933X258X14=1PC

52

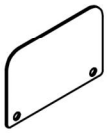

150X100X2.5=2PCS

53

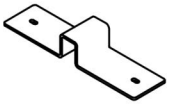

206X50X33=2PCS

54

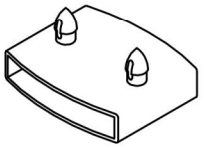

57X48X26.5=13PCS

55

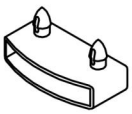

57X29X27=26PCS

56

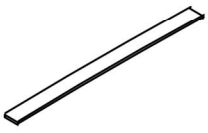

760X52X9=26PCS

57

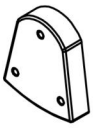

144X123X33=2PCS

58

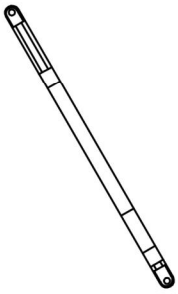

605X22=4PCS

59

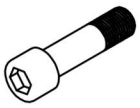

M12X45=2PCS

60



Φ12X24X1.5=2PCS

61



7.8XM6X19=2PCS

All rights reserved.

BOX: W5290P457894

(62)  M6X20=8PCS	(63)  M6X20=13PCS	(64) 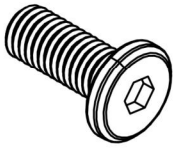 M8X20=37PCS	(65) 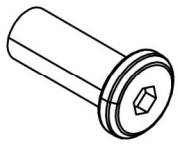 M6X20XΦ8=4PCS
(66) 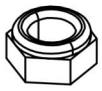 M6=2PCS	(67)  M8=8PCS	(68) 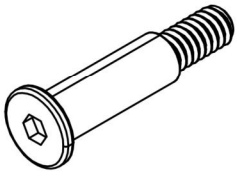 7.8XM6X35=2PCS	(69) 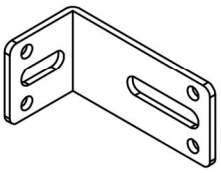 98X48X49=4PCS
(70) 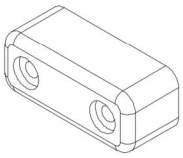 50X20X20=2PCS	(71) 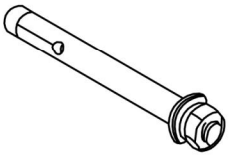 8X100=4PCS	(72)  4MM=1PC	(73)  5MM=1PC
(74)  M4X16=16+1PCS	(75)  M4X42=24+2PCS	(76) 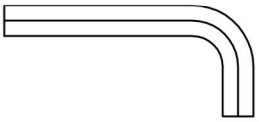 M10=1PC	(77)  M4X20=26+2PCS
(78)  M4X35=10+1PCS	(79) 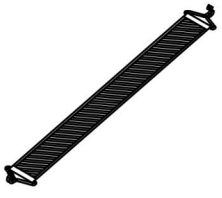 =2PCS	(80) 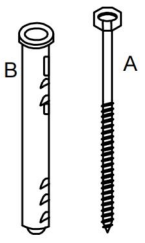 8X100=4PCS	

All rights reserved.

Using Camlocks(Single head cam)

STEP1

Connect the male camlock as directed in the assembly instructions using a screwdriver.

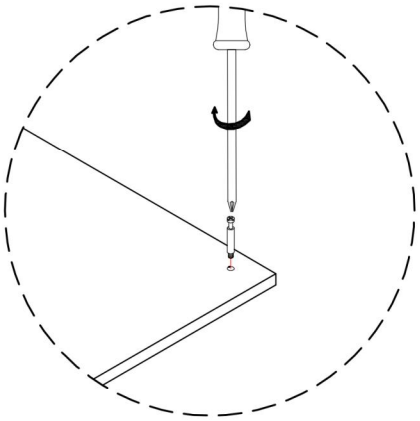

STEP2

Push the male camlock into the entry hole.

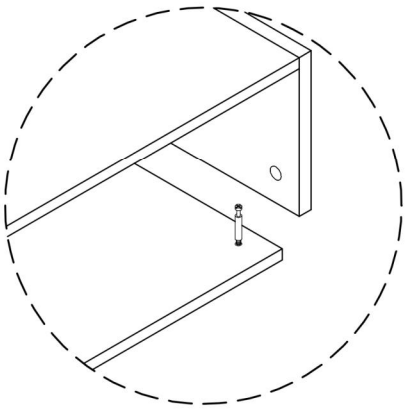

STEP3

Insert the female camlock as shown in the instruction.

Note: ensure that the arrow on the top of the camlock points towards the entry hole for the male camlock.

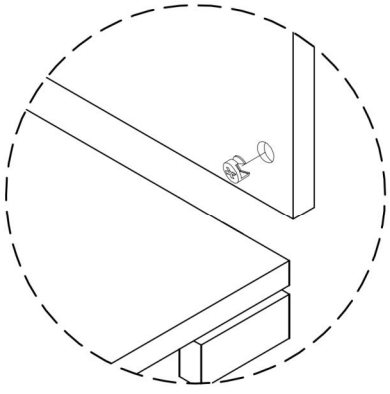

STEP4

Turn the female camlock 180 degrees clockwise with a screwdriver to complete the locking.

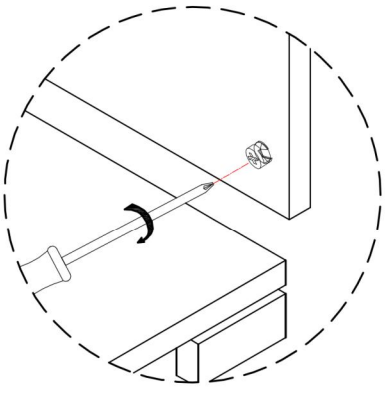

All rights reserved.

STEP1

ATTENTION:

This step involves similar panel components.
To prevent assembly errors, please carefully verify the positional relationship of the hole positions in the enlarged diagram.
Also make sure that 1# attaches to 3#, and 2# attaches 4#.

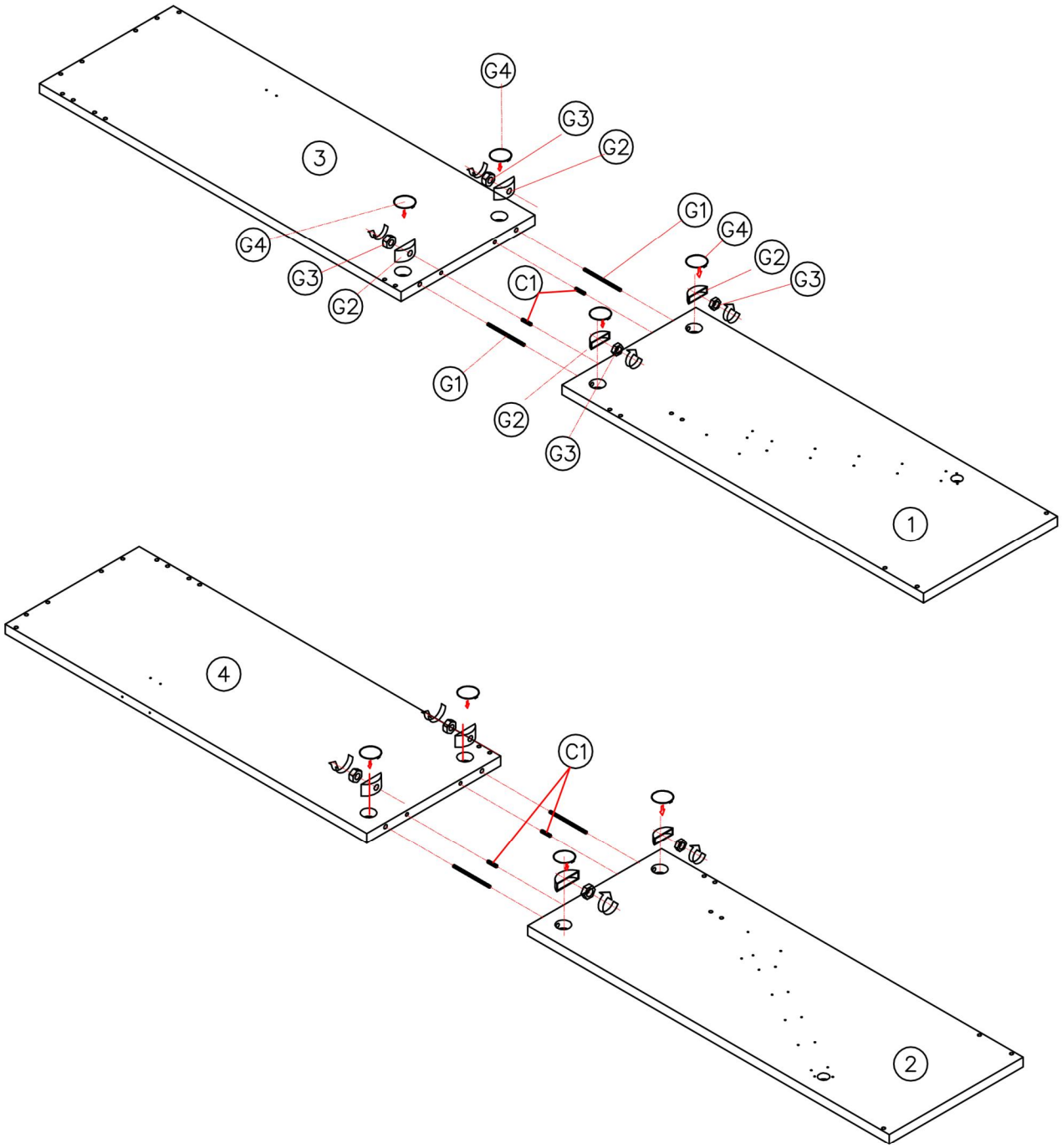

①*1 ②*1 ③*1 ④*1	C1*4 G1*4 G2*8 G3*8 G4*8

All rights reserved.

STEP2

Tools Required

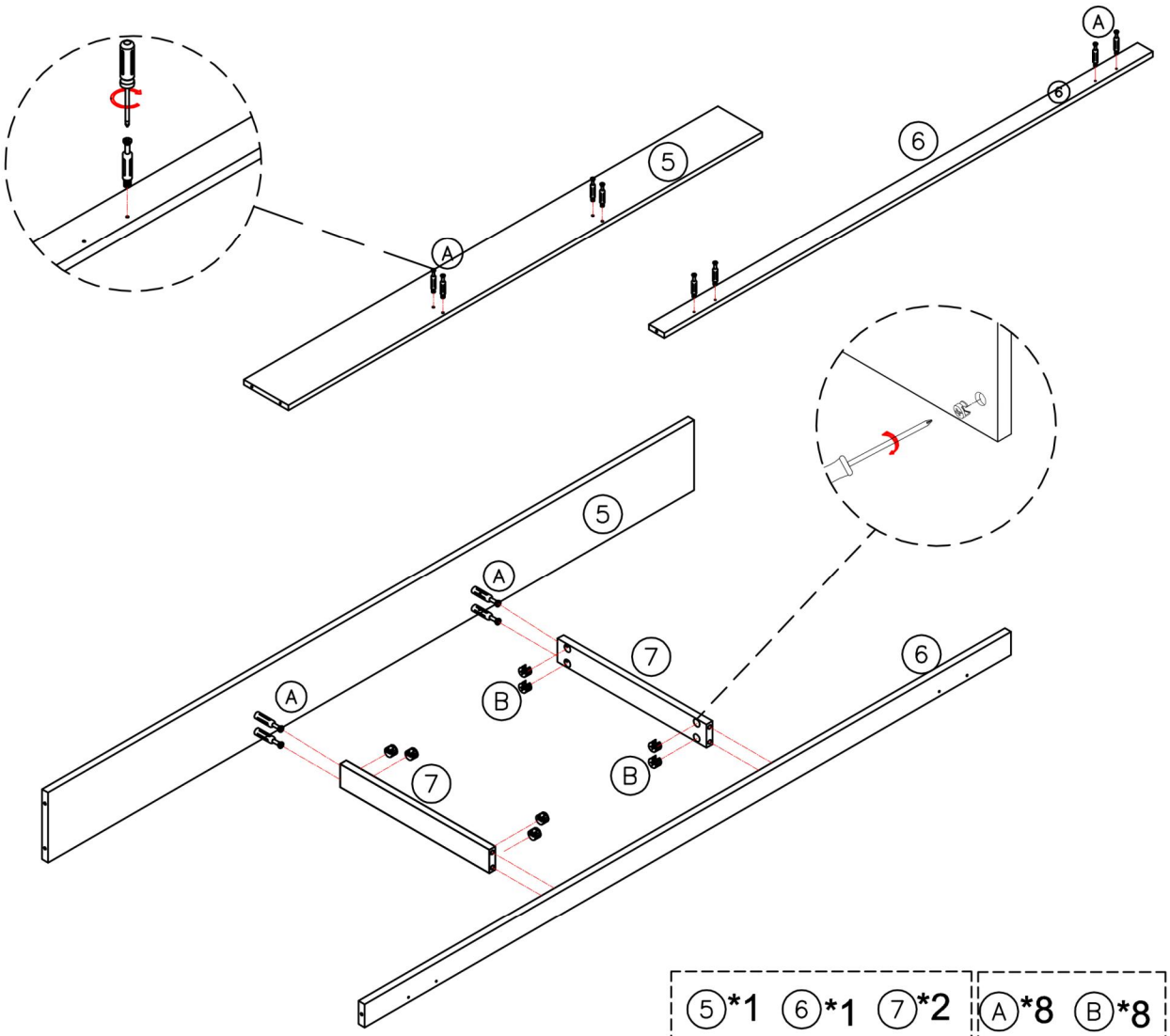

⑤*1 ⑥*1 ⑦*2 Ⓐ*8 Ⓑ*8

STEP3

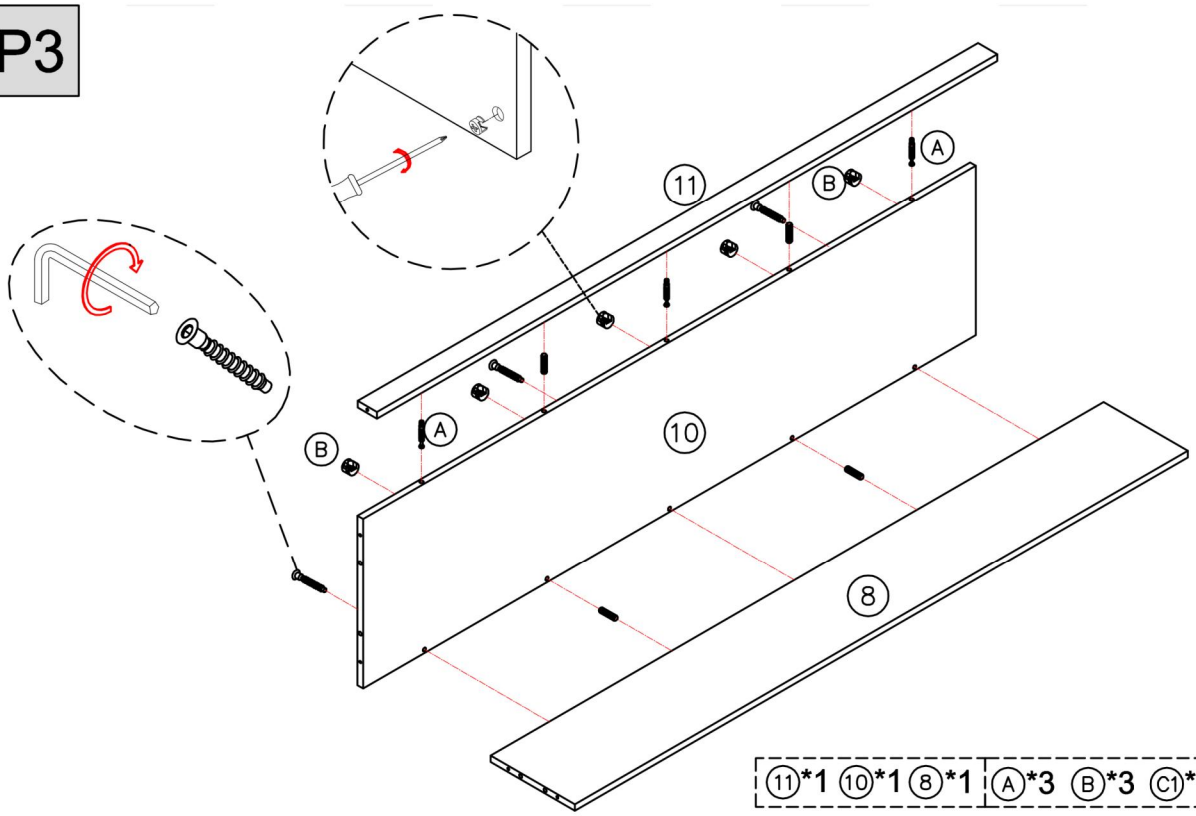

⑪*1 ⑩*1 ⑧*1 Ⓐ*3 Ⓑ*3 Ⓒ1*4 Ⓓ1*4

All rights reserved.

STEP4

Tools used

ATTENTION:

There are quite a few components to be installed in this step.

Please pay attention to checking whether all components are complete!

Put them together in the right postion before fastening the screws!!

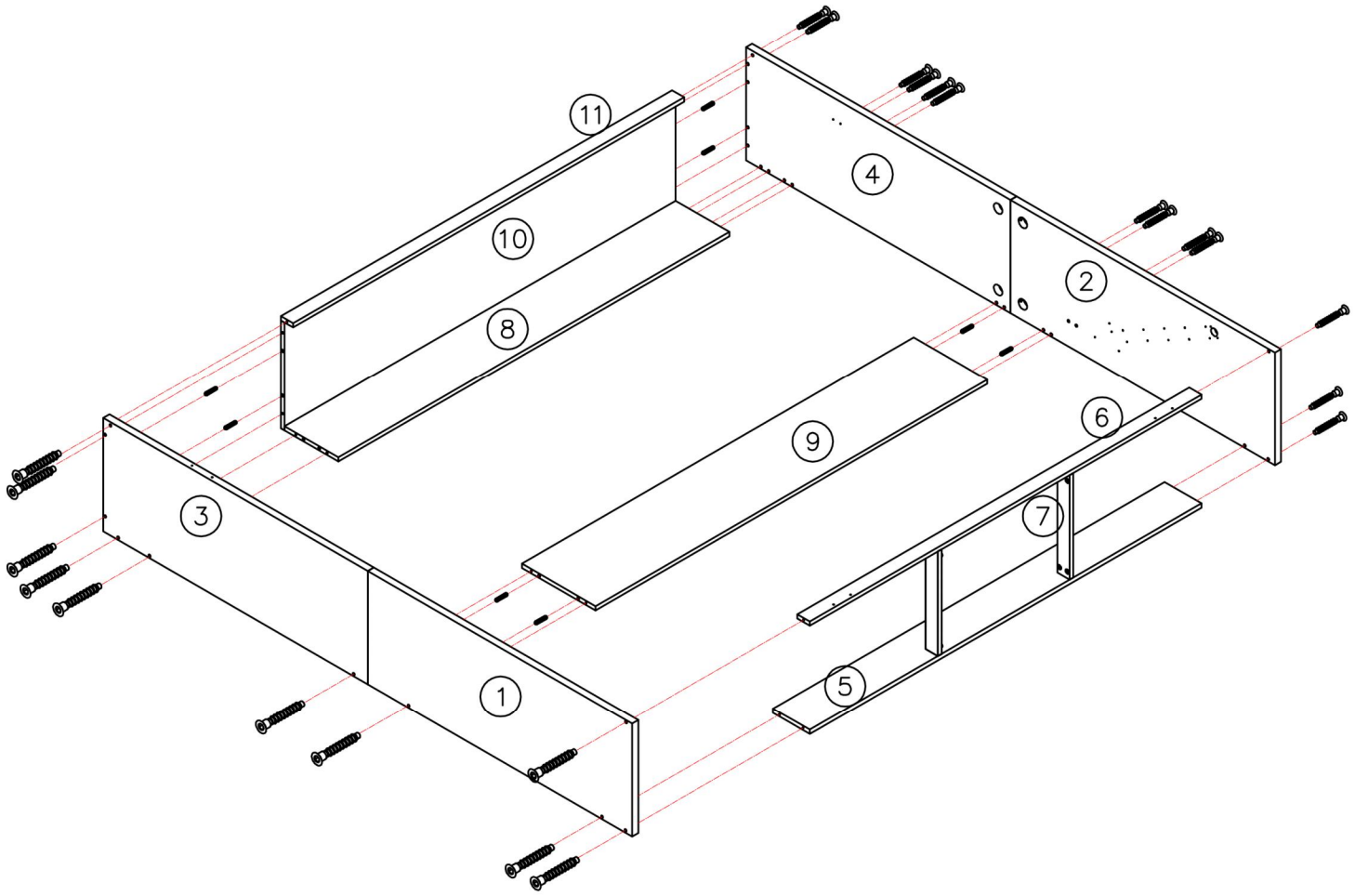

(9)*1	(C1)*8	(D2)*18	(F)*1

All rights reserved.

M WALL ANCHORING REQUIREMENTS & INSTALLATION RECOMMENDATIONS

Important information to read before starting the assembly.
Keep this information for future reference.



IMPORTANT WARNINGS
Risk of serious injuries if the wall bed tips over.To prevent wall bed from tipping over, mount it permanently to the wall.Only a qualified person2 must carry out the installation and any possible adjustment of the wall bed(including disassembly).If the wall bed Is not fimly mounted (anchored) to the wall,it might tip overand cause serious iniuries to the installer,users of the bed as well as the Deople near the bed.The choice of wall anchoring depends on the type of wall, Use wall anchors suitable for the wall material.

Qualified person,it is necessary to have a g0od understanding of the wall structure where the bed is anchored,inclusing the positioning of thewall studs and structural components in the case of a wood or metal structure.,If you do nothave the necessary skIls, make sure that the walanchoringis done by someone who has the qualifications and required knowedge. When you choose the installer, make sure to comply withall applicable regulations in the province, state or country where the furniture is installed.



IMPORTANT WARNINGS

INSTALLATION AND APPROPRIATE HARDWARE

Using appropriate hardware, all the anchor screws of the wall bed must be firmlysecured to the wood or metal studs, the structural components, or a masonry wall.

Only wall anchor screws for wood-frame walls are provided with this bed.

NEVER USE DRYWALL ANCHOR SCREWS OR SECURE THE BED TO DRYWALL

See wall anchoring requirements and installation notes provided in theinstruction manual, according to the type of wall,and use the appropriateanchors such as described in this manual.

NUMBER OF SCREWS NEEDED
Two (2) screws are required for each anchor point. Four (4)wall anchor pointsare necessary for the proper installation of the wall bed. So you need a totalof eight (8) wall anchor screws.

THE SCREWS MUST BE VERY WELL ANCHORED TO THE STRUCTURALCOMPONENTS OF THE WALL.

*A CERTIF IED CONSTRUCTION PROFESSIONAL,IN COMPLIANCE WITH APPLICABLE REGULATIONS IN THE PROVINCE, STATE OR COUNTRY WHERE THE FURNITURE IS INSTALLED.

All rights reserved.

⚠ SAFETY FIRST: WALL ANCHORING IS NON-NEGOTIABLE

MURPHY BEDS MUST BE SECURELY ANCHORED TO STRUCTURAL MEMBERS. NEVER MOUNT SOLELY TO DRYWALL. IMPROPER INSTALLATION CAN CAUSE SERIOUS INJURY OR DEATH.

⃠ ABSOLUTELY FORBIDDEN HARDWARE

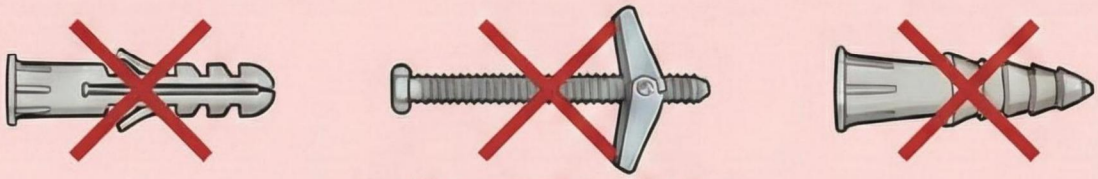

PLASTIC ANCHORS - WILL FAIL

A. WOOD STUD WALL

HOW TO IDENTIFY



KNOCK ON A HOLLOW WALL



STUD FINDER TOOL (VITS

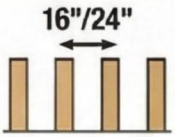

STUDS SPACED IS 16" STUD

REQUIRED HARDWARE



HEAVY-DUTY SCREWS (MIN. 5/32" DIA., 2.5" LONG)

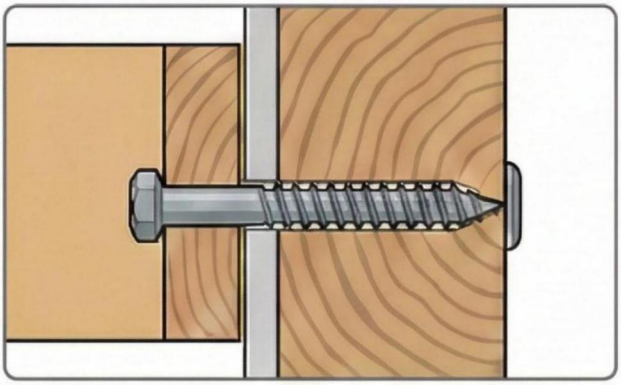

MUST PENETRATE WOOD STUD CENTER AT LEAST 2.5"

B. MASONRY/CONCRETE WALL

HOW TO IDENTIFY

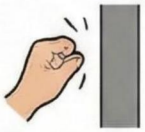

KNOCK ON A SOLID WALL



DRILL BIT CREATES GREY/RED DUST

REQUIRED HARDWARE



ALL-METAL EXPANSION BOLTS (MIN. 5/32" DIA., 2.5" LONG)

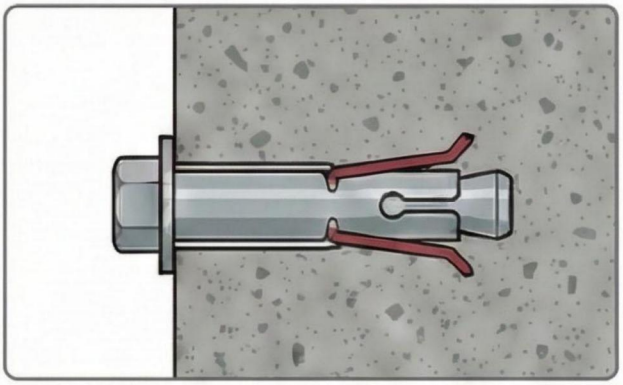

CLEAN HOLE OF DUST. DO NOT USE PLASTIC.

☑ FINAL SAFETY CHECKLIST

- ☑ VERIFY STUD CENTER BEFORE DRILLING
- ☑ ENSURE FLUSH WALL FIT (ADJUST BASEBOARD)
- ☑ PERFORM PULL TEST BEFORE MATTRESS LOAD
- ☑ AVOID HIDDEN WIRES/PIPES BEFORE DRILLING
- ☑ REGULARLY INSPECT AND MAINTAIN WALL ANCHORS
- ☑ CONSULT A PROFESSIONAL FOR WALL ASSESSMENT AND OPTIMAL HARDWARE; CUSTOMER ASSUMES ALL INSTALLATION LIABILITY

All rights reserved.

STEP5

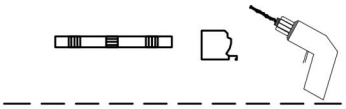

Tools Required

M WARNING:

There is a risk of serious injury due to the wall-mounted bed tipping over.

To prevent the wall-mounted bed from tipping over,it must be permanently secured to a brick wall.If the wall structure is not masonry, qualified professionalsare required to perform the wall anchoring.

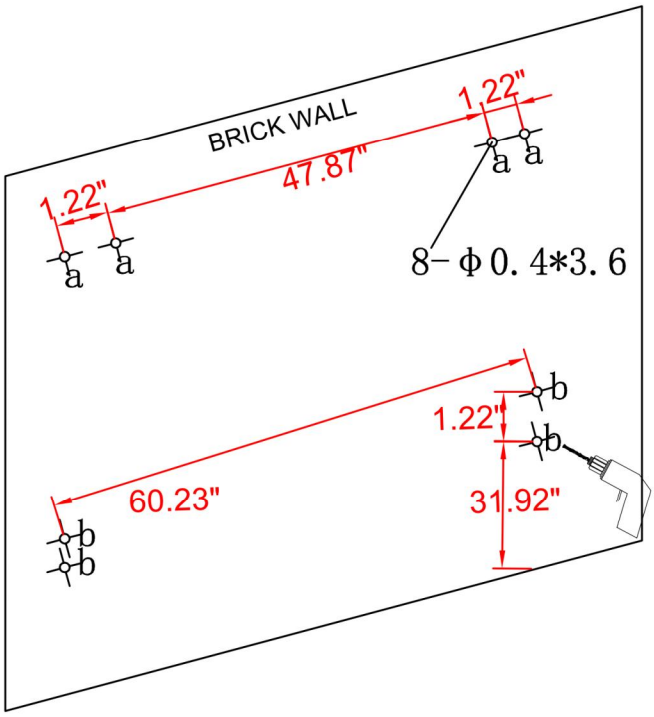

1.

Use a marker pen, a tape measure,and a spirit level to mark positionson the brick wall according to thepositions shown in the diagram.Use an electric drill to create4 A holes and 4 B holes at themarked positions; Hole A has a diameter of 0.4 inches and a depth of 3.6 inches;Hole B has a diameter of 0.4 inches and a depth of 3.9inches.

All rights reserved.

STEP6

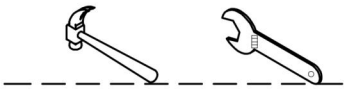

Tools Required

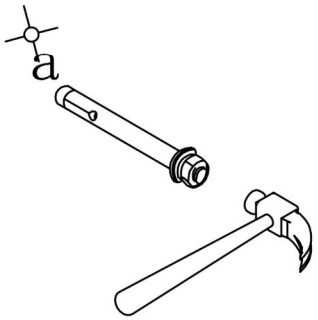

2,
Gently tap the No. 71 expansion boltsinto the holes with a hammer until0.04 inches are exposed outside.Use an adjustable wrench to tightenthe nuts on the expansion bolts clockwise with force.Use an adjustable wrench to removethe nuts and anti - slip washersfrom the expansion bolts.

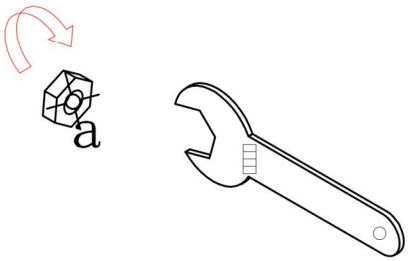

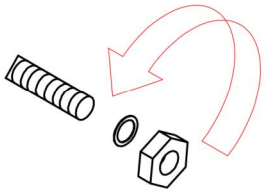

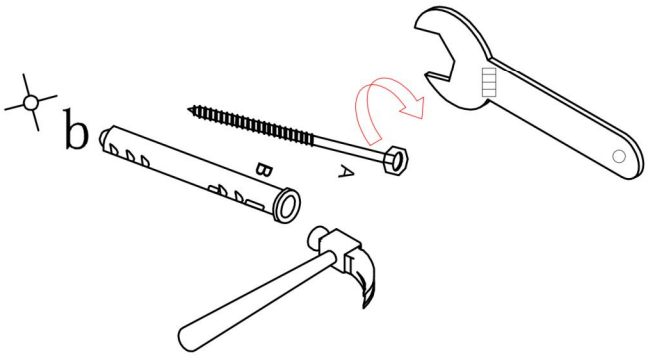

3,
Gently tap the No. 80 expansion rubberhose into hole B with a hammer untilthe end ring of the expansion rubber hoseis flush with the wall.

71*4 80A-B*4

All rights reserved.

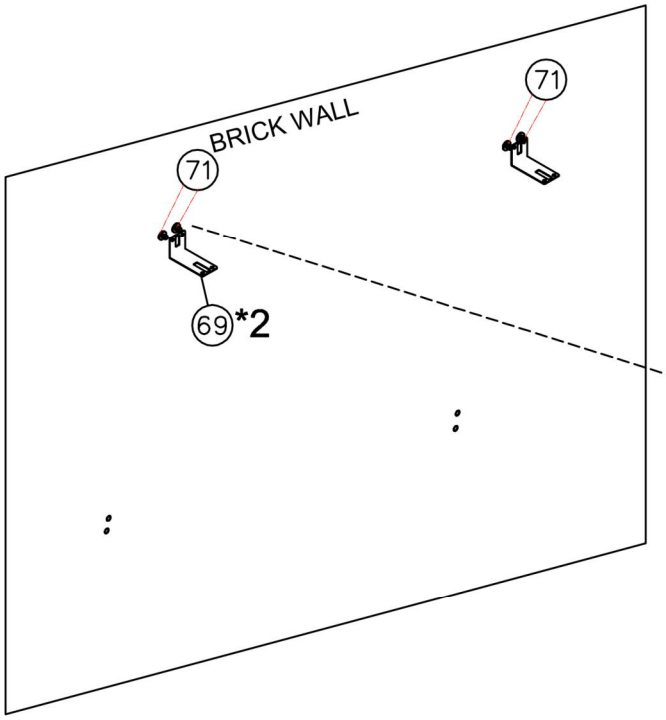

4,Please install the No. 69iron part strictly accordingto the direction shownin the diagram.

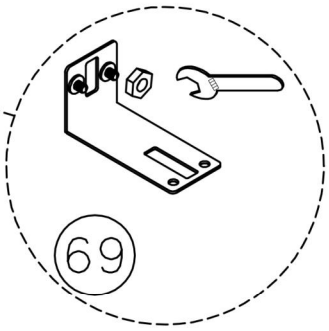

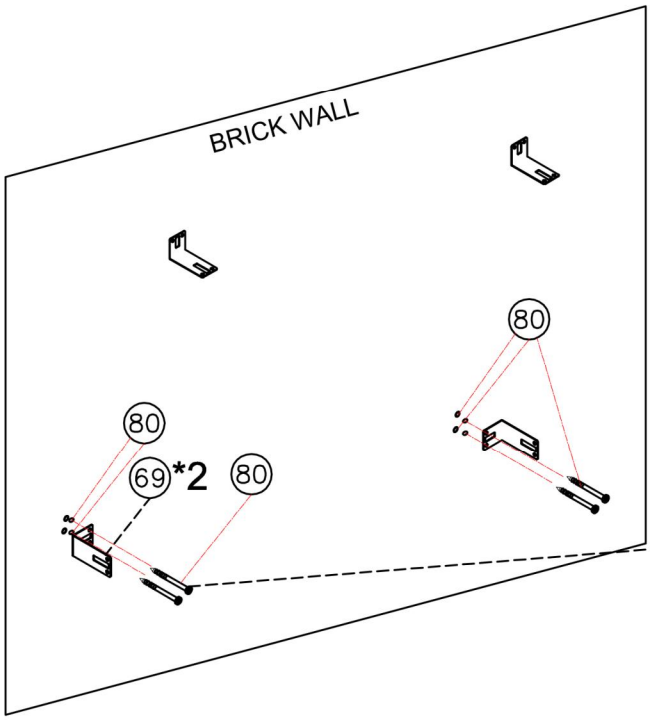

4,Please install the No. 69iron part strictly accordingto the direction shownin the diagram.

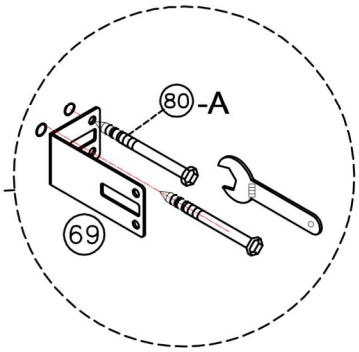

69*4 71*4 80A-B*4

All rights reserved.

STEP7

WARNING

For your safety

This step requires at least 4 people to complete together. One person is responsible for observing and guiding the moving direction of the cabinet body;two people respectively cooperate on both sides of the cabinet body to move it to the accurate position; and one person is responsible for keeping it upright to prevent the cabinet body from tipping over.

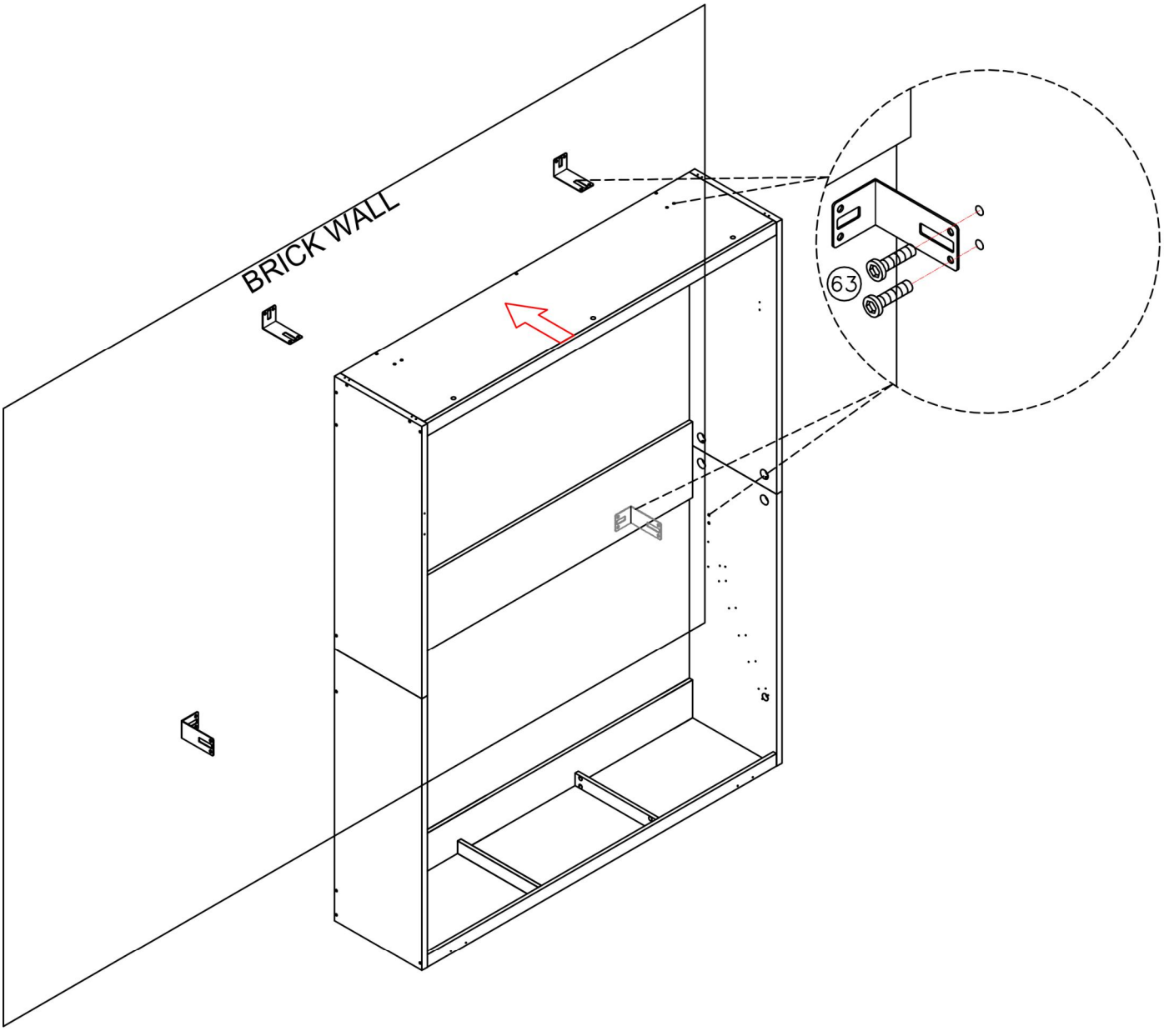

63*8

All rights reserved.

STEP8

Tools Required

ATTENTION:

This step involves similar panel components.To prevent assembly errors,please carefullydistinguish the installation positions according to the component numbers

1, Pay attention to the installation direction

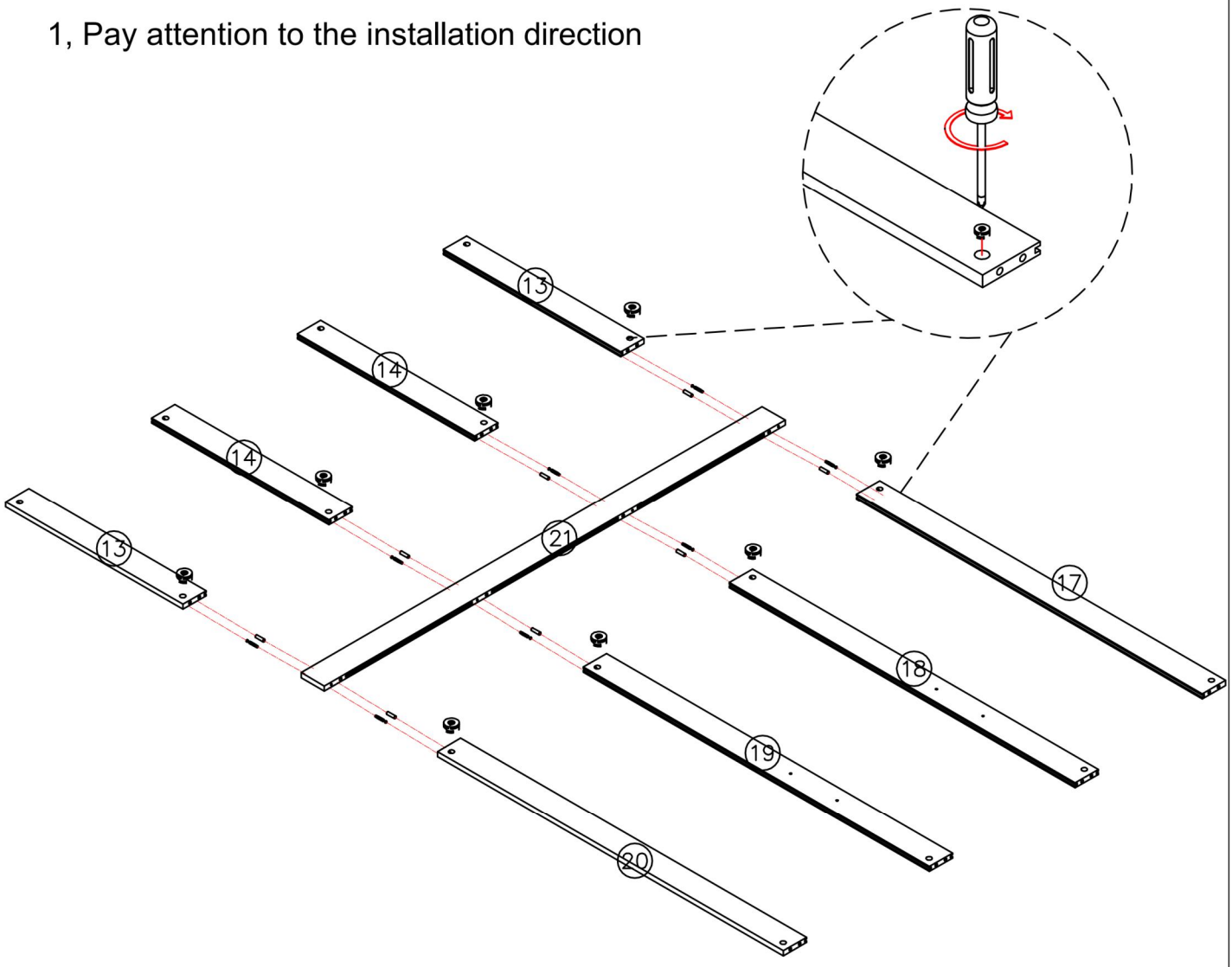

13*2 14*2 17*1 18*1 19*1 20*1	A*8 B*8 C1*8

All rights reserved.

2,Slots

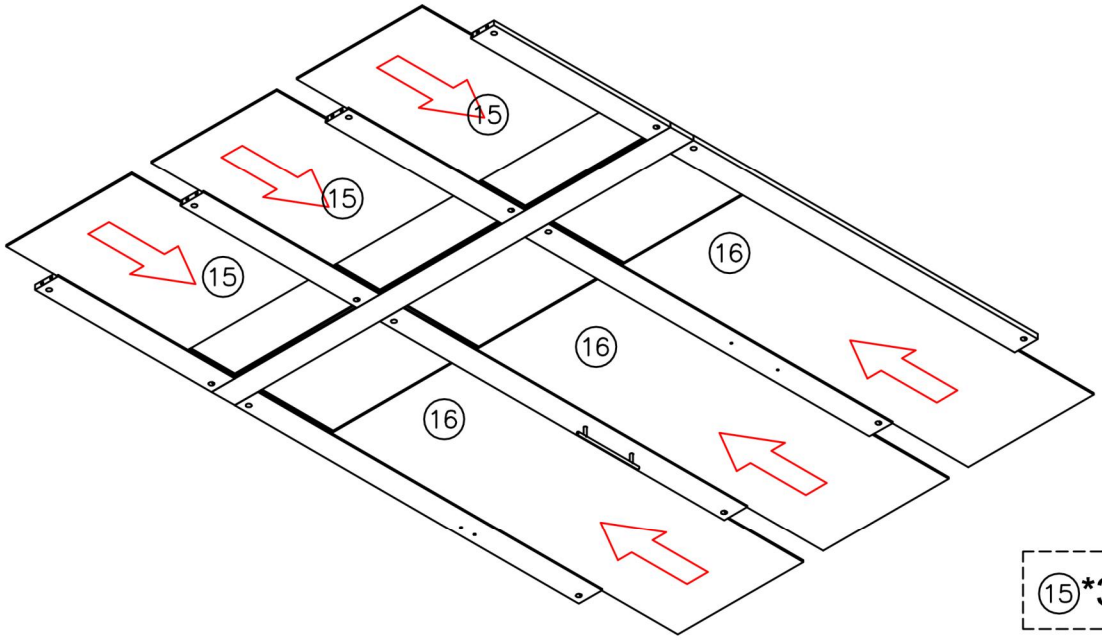

15*3 16*3

3,

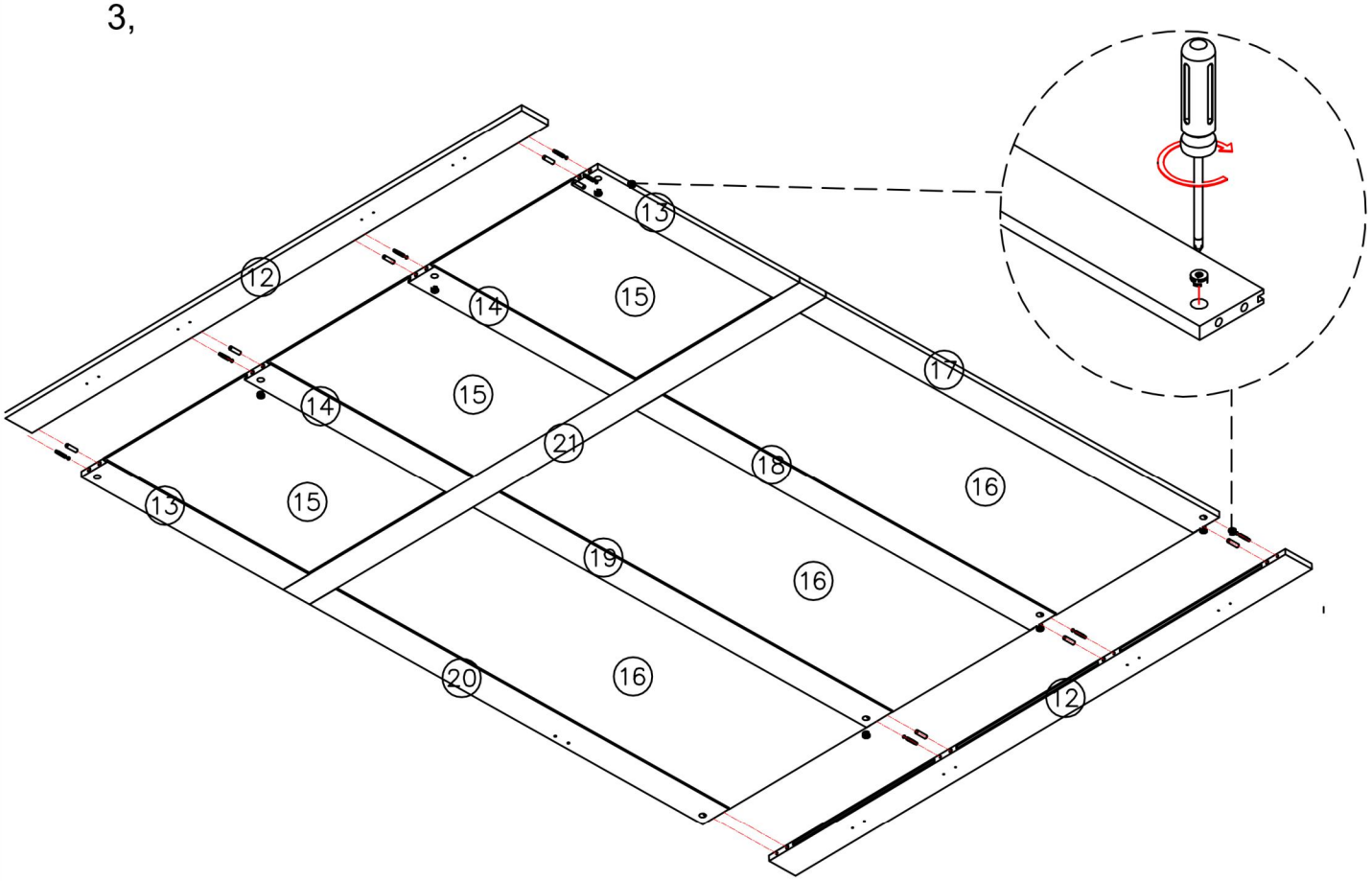

12*1 21*1 | A*8 B*8 C1*8

All rights reserved.

STEP9

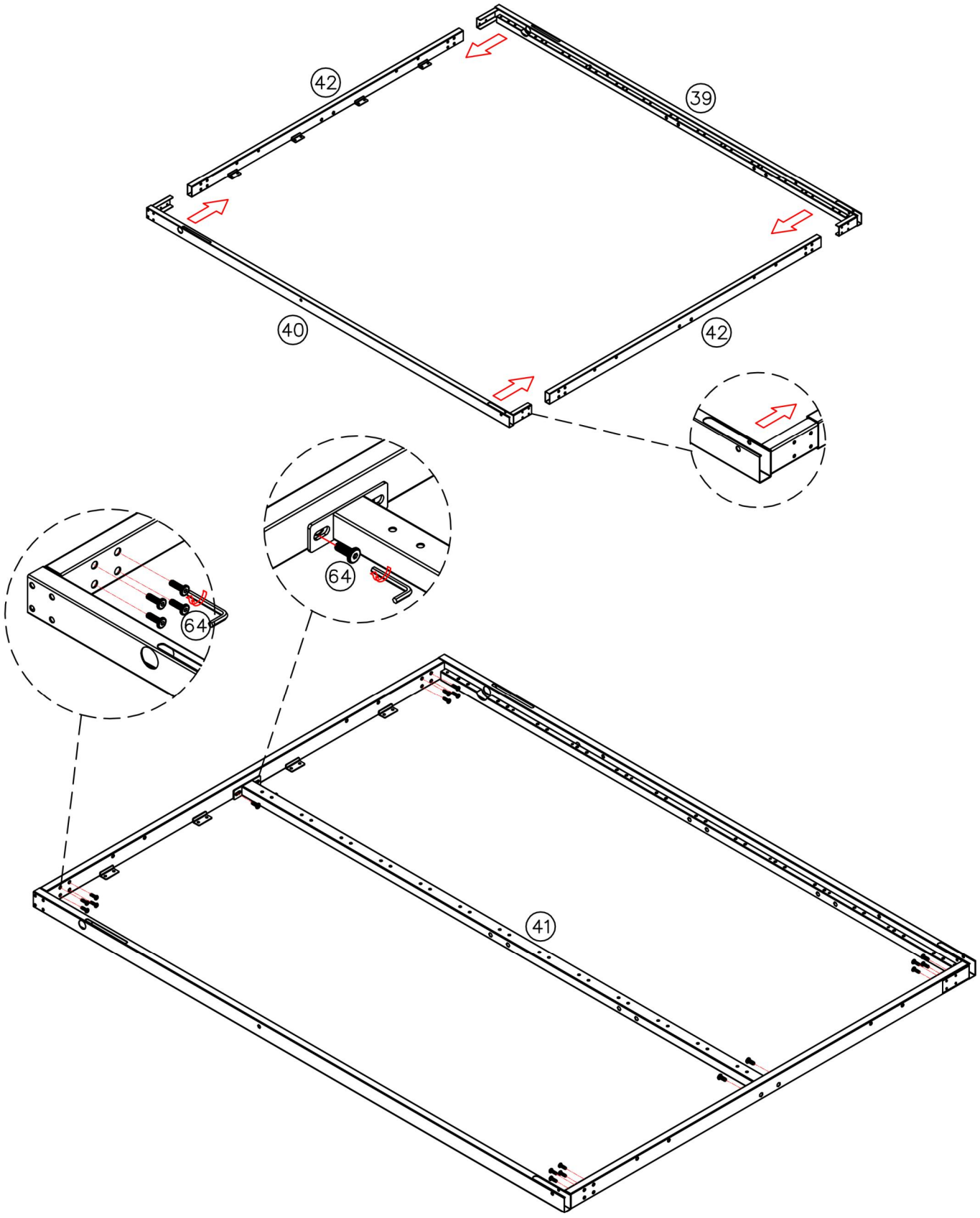

To prevent incorrect installation, please strictly install Panel 41#
in the direction shown in the diagram.

39*1 40*1 42*2 63*16 64*4 72*1 73*1

All rights reserved.

STEP10

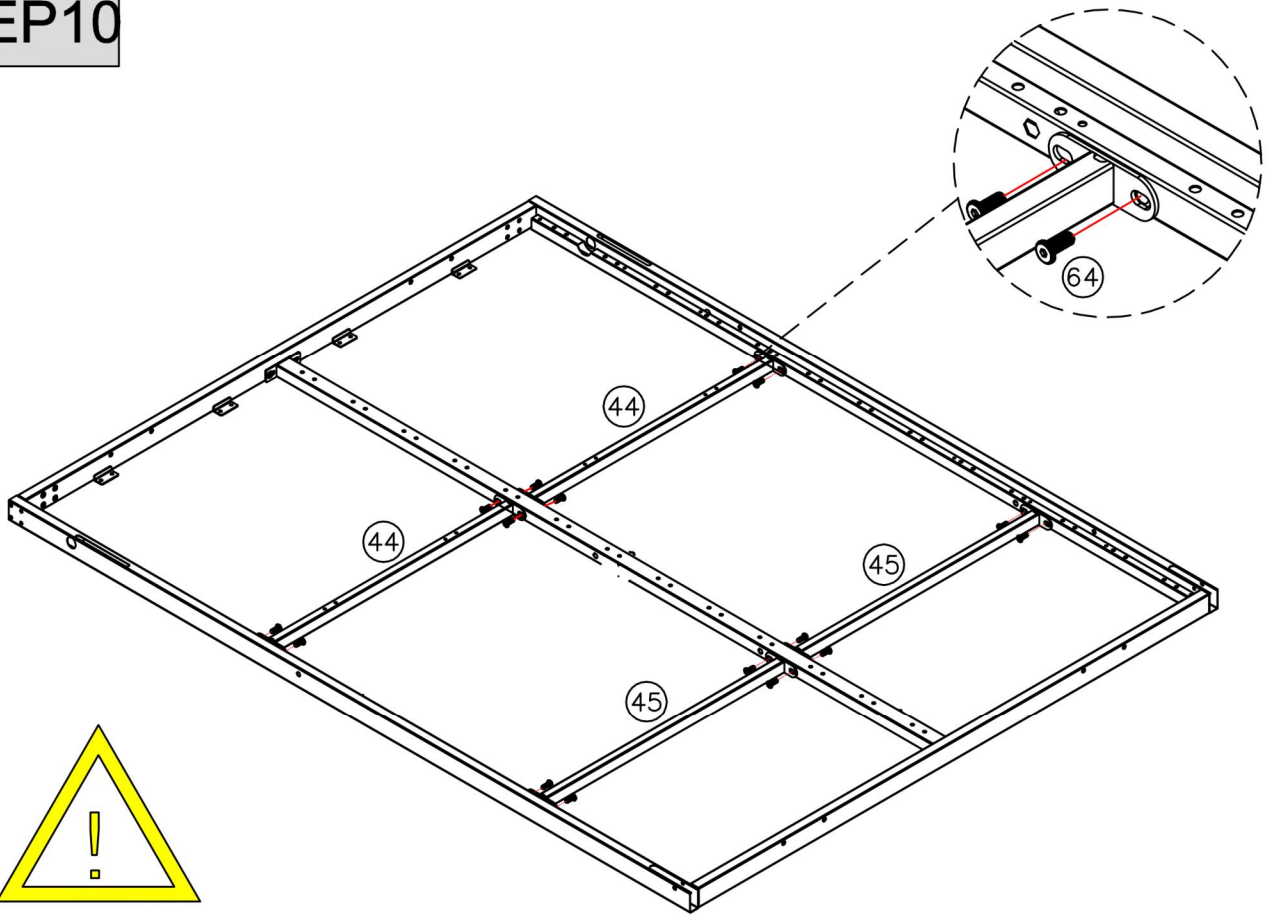

WARNING
Incorrect assembly of Part 46 and Part 47 will inevitably causedamage to the product during use.Please carefully check whether their installation position and direction are consistent with the diagram.

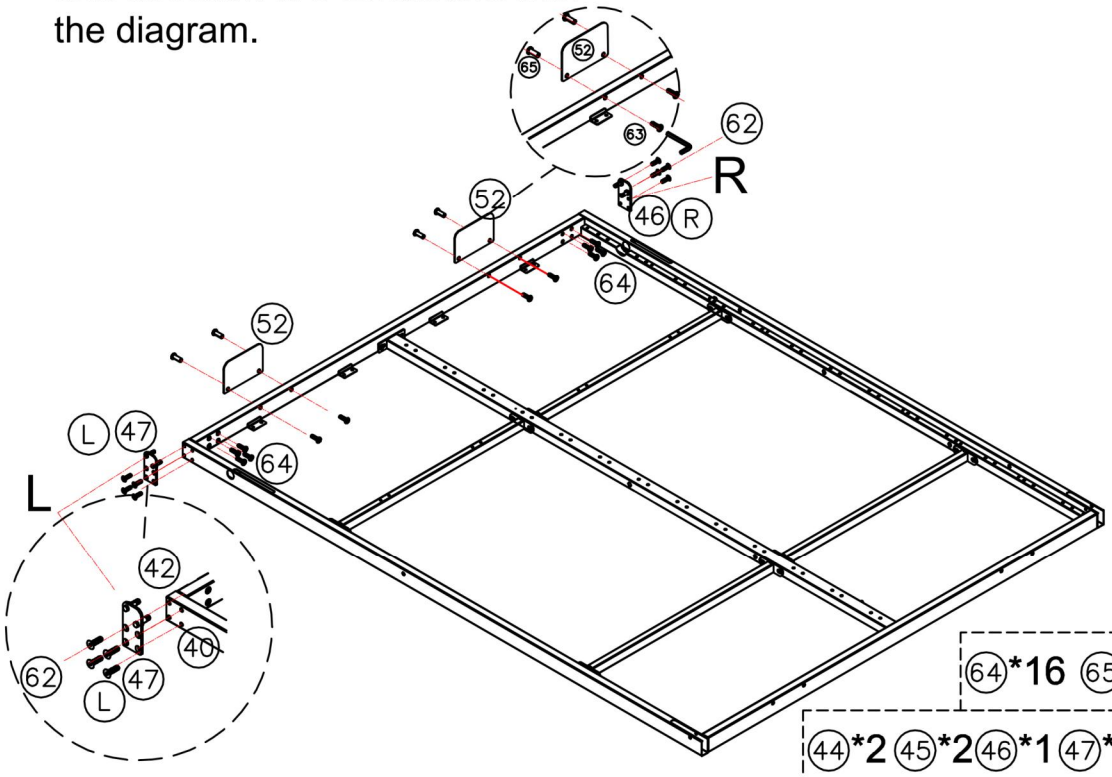

64*16 65*4 72*1 73*1

44*2 45*2 46*1 47*1 52*2 62*8 63*4

All rights reserved.

STEP11

Tools Required

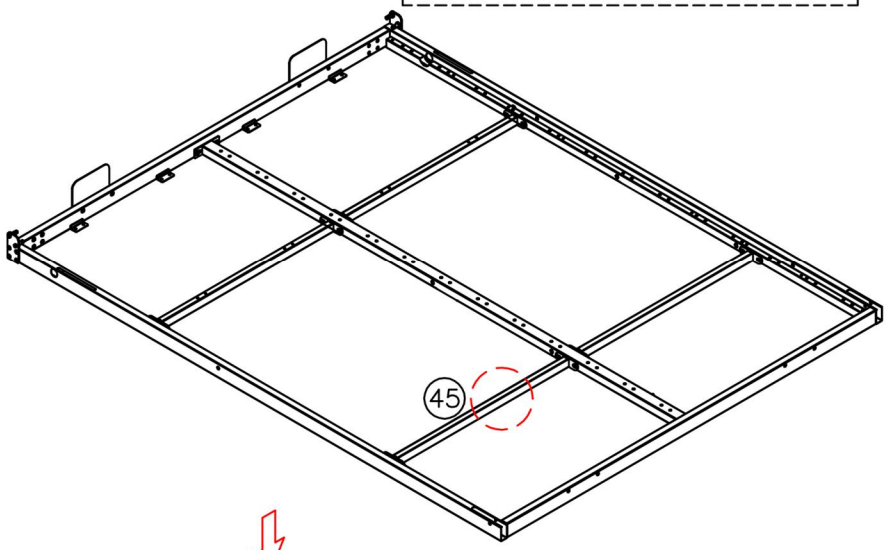

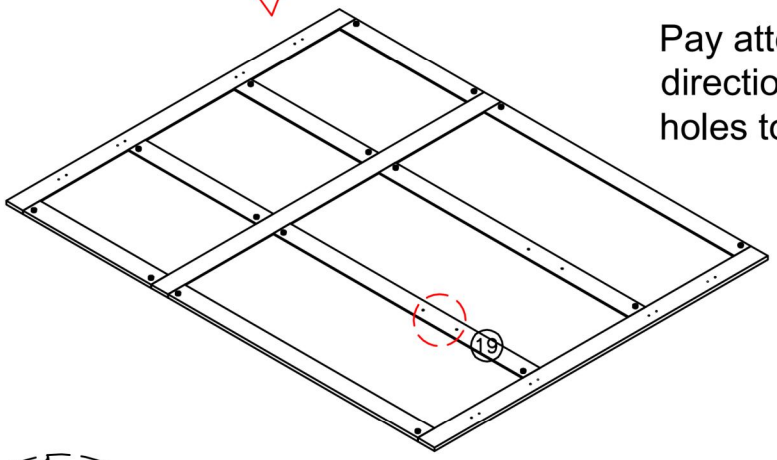

Pay attention to the installation direction.Especially 14# has two guide holes to isntall 53#stretch across 45#.

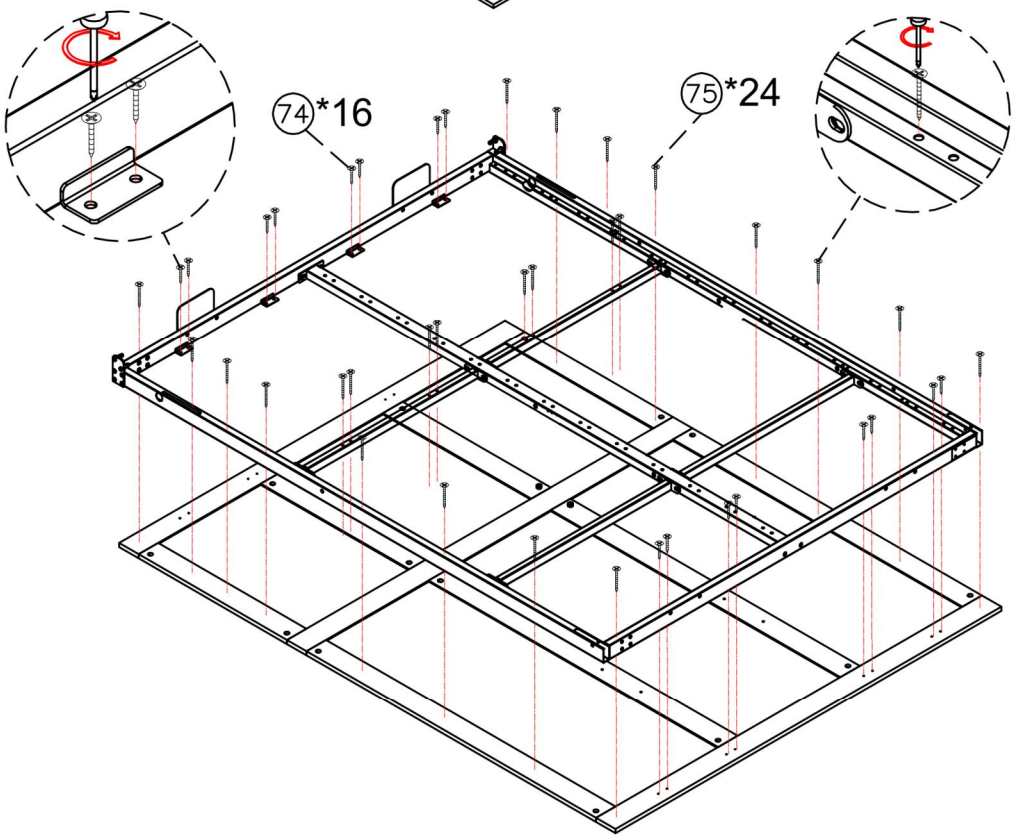

74*16 75*24

All rights reserved.

STEP12

Tools Required

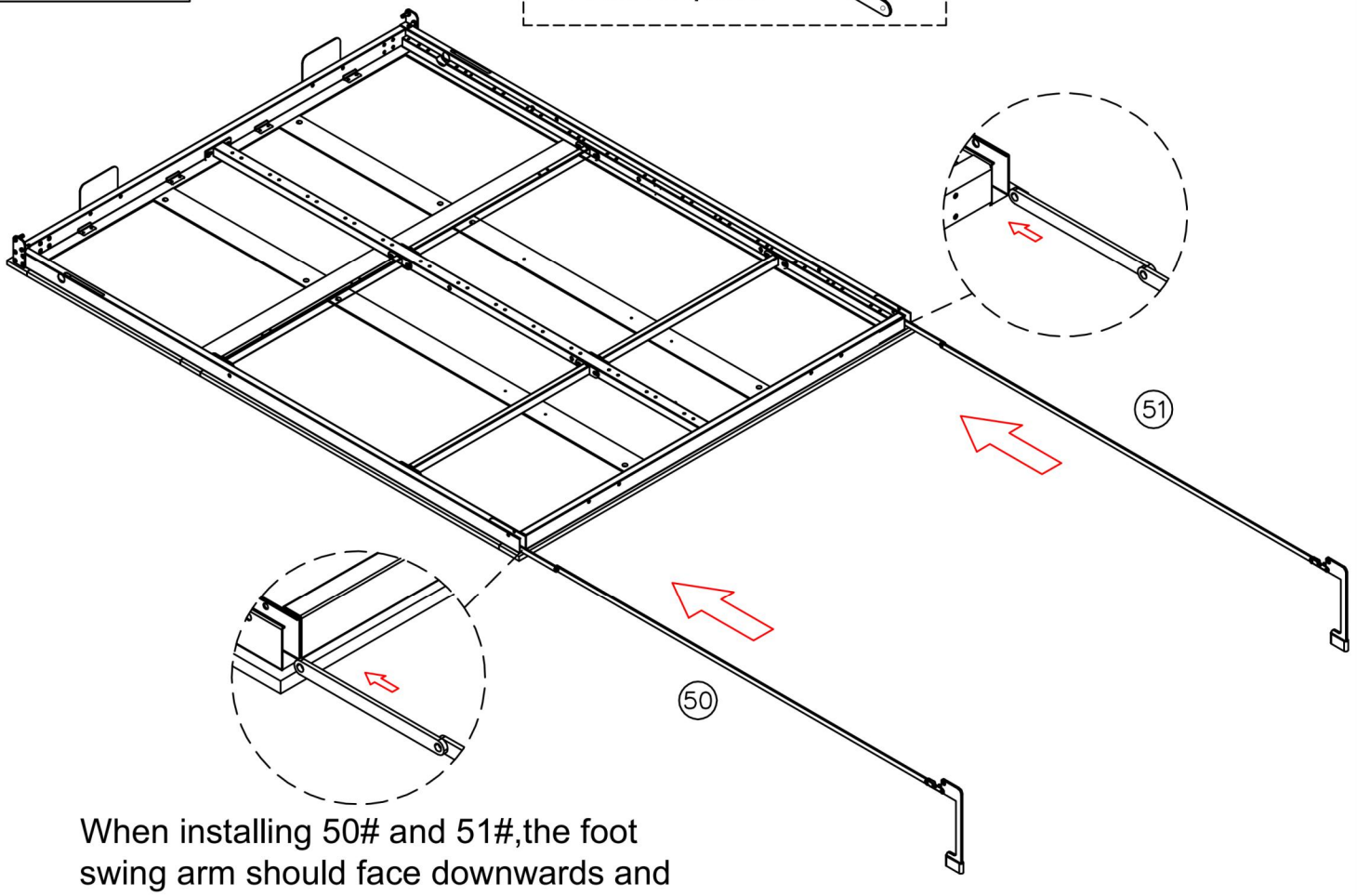

When installing 50# and 51#,the foot swing arm should face downwards and the small swing arm should be on the outer side.50#and 51# can not be exchanged!!

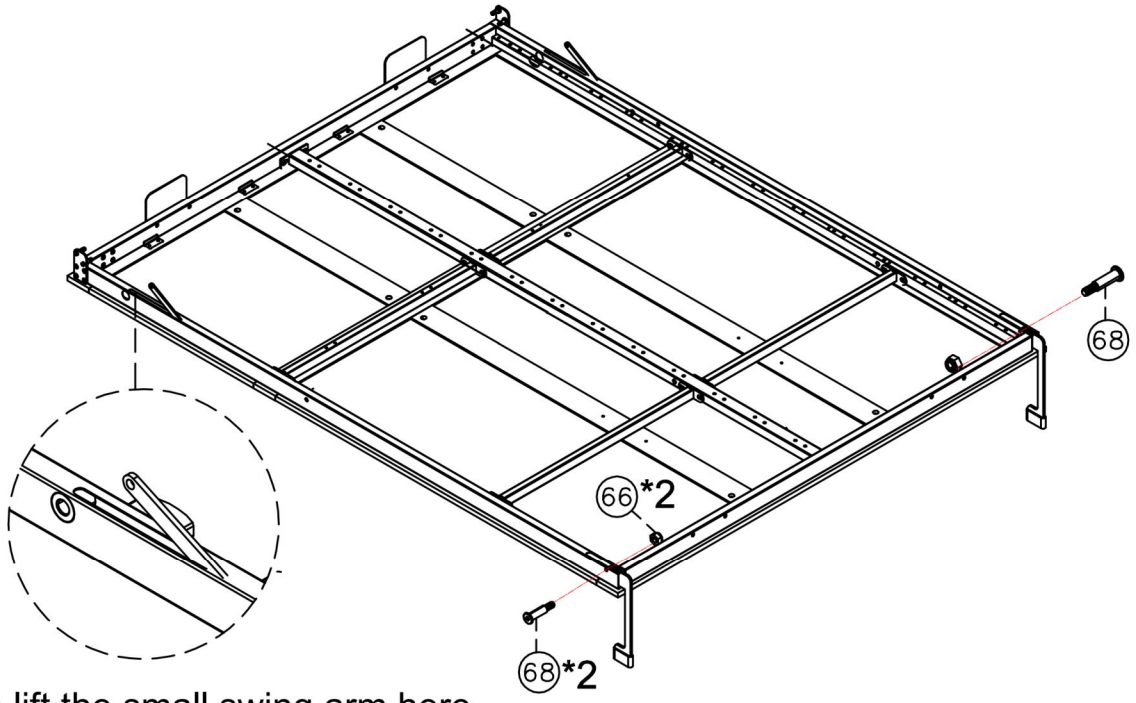

Please lift the small swing arm here
Then install the screws

50*1 51*1 66*2 68*2 72*1

All rights reserved.

STEP13

Tools Required

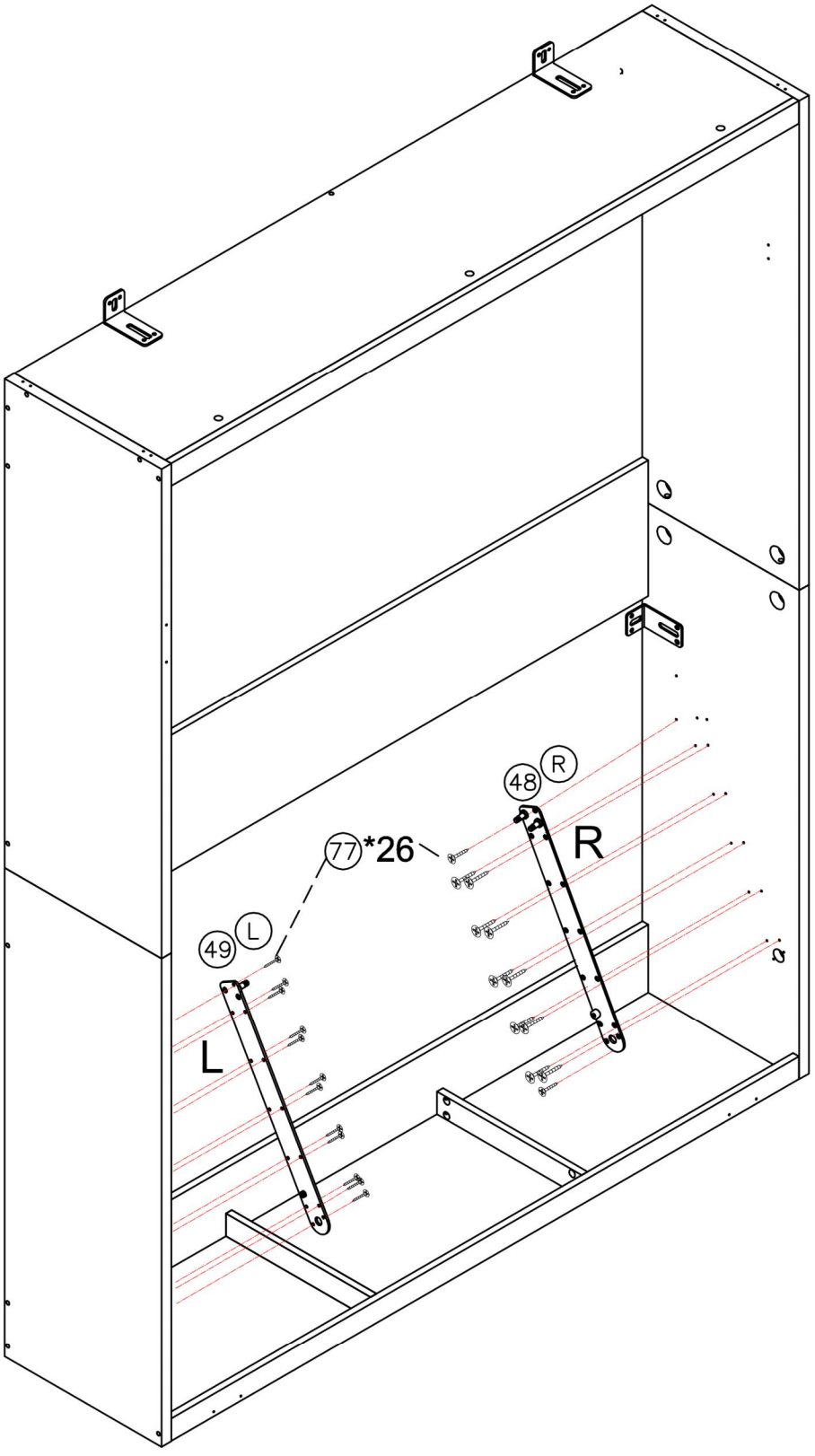

48*1 49*1 77*26

All rights reserved.

STEP14

Tools Required

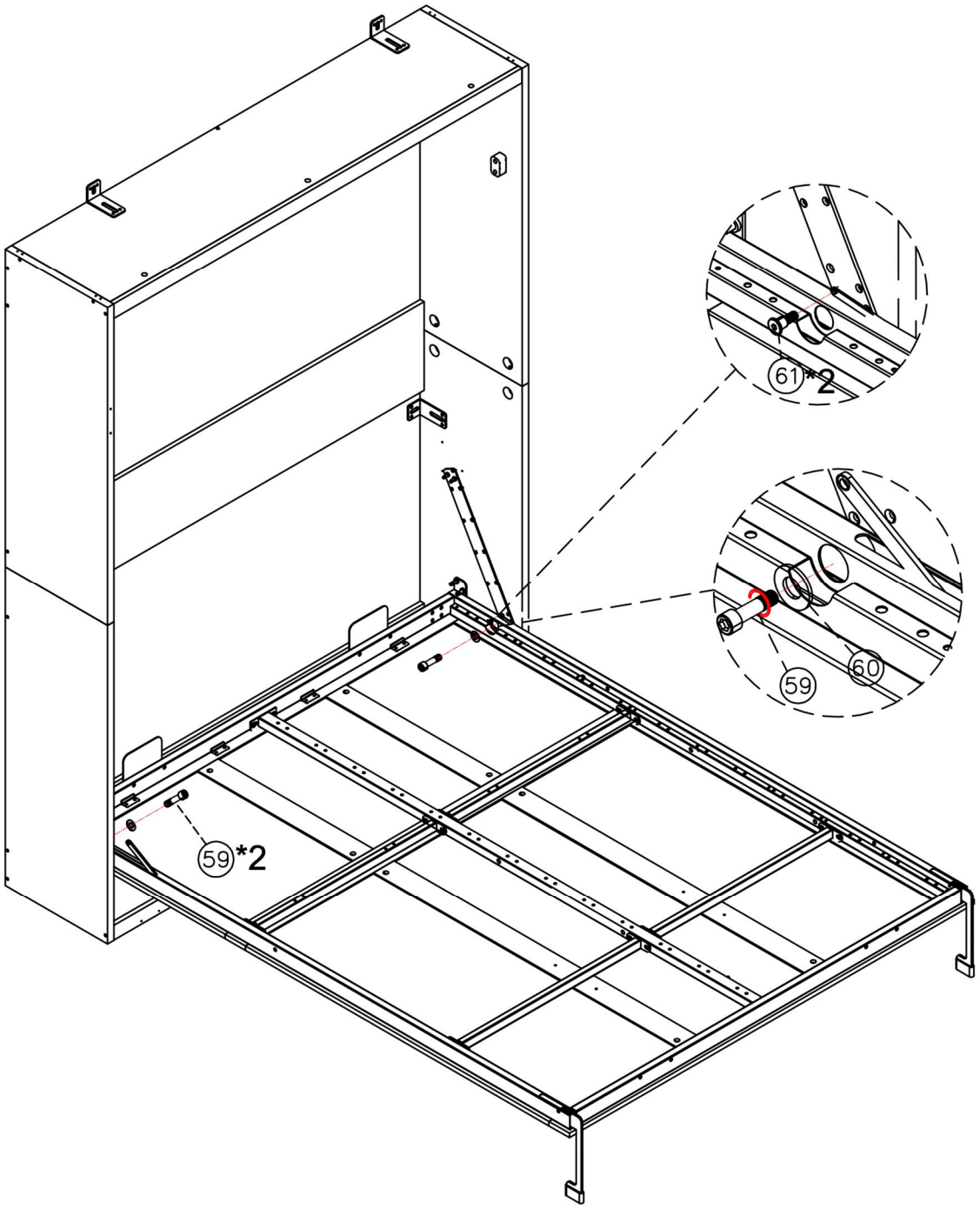

59*2 60*2 61*2 72*1 76*1

All rights reserved.

STEP15

Tools Required

WARNING
DO NOT remov the iron straps compressing the hydraulic rods (Part 58) until you have fixed the rods on both sides of the cabinet interior.

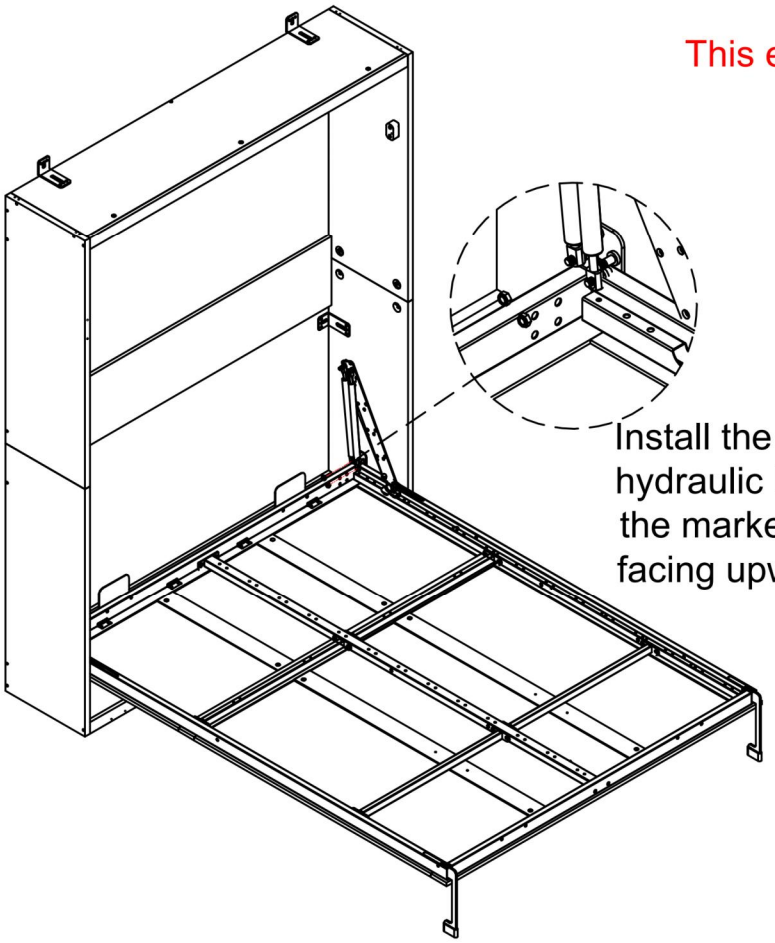

This end up



Install the hydraulic lever with the marked area facing upwards.

Swing the bed frame up and down, install 58# onto the bolts of 48# and 49# to get the right postion, then lock 67# nuts.

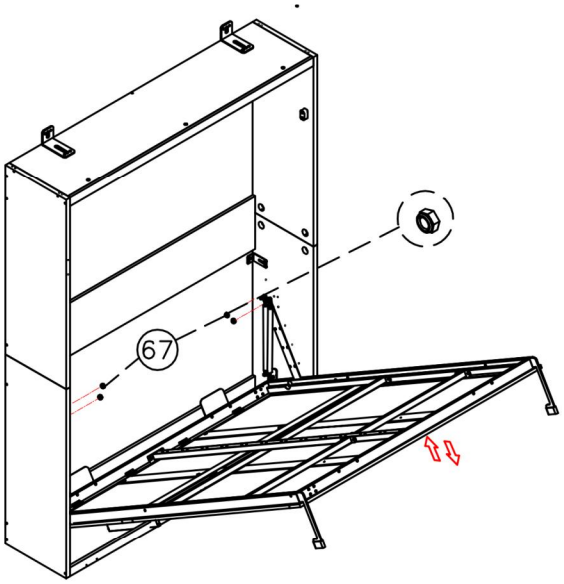

Press down the bed frame appropriately and remove the iron straps of 58#(recommend to wear gloves).

58*4 67*8

All rights reserved.

STEP16

Tools Required

ATTENTION:

Because after removing the iron straps around hydraulic rods,the hydraulic rod will produce tension on the bed frame, due to the subsequent installation ,there is no heavy weight on the bed frame,so the bed frame will rebound, therefore,please pay attention to the warning belows.

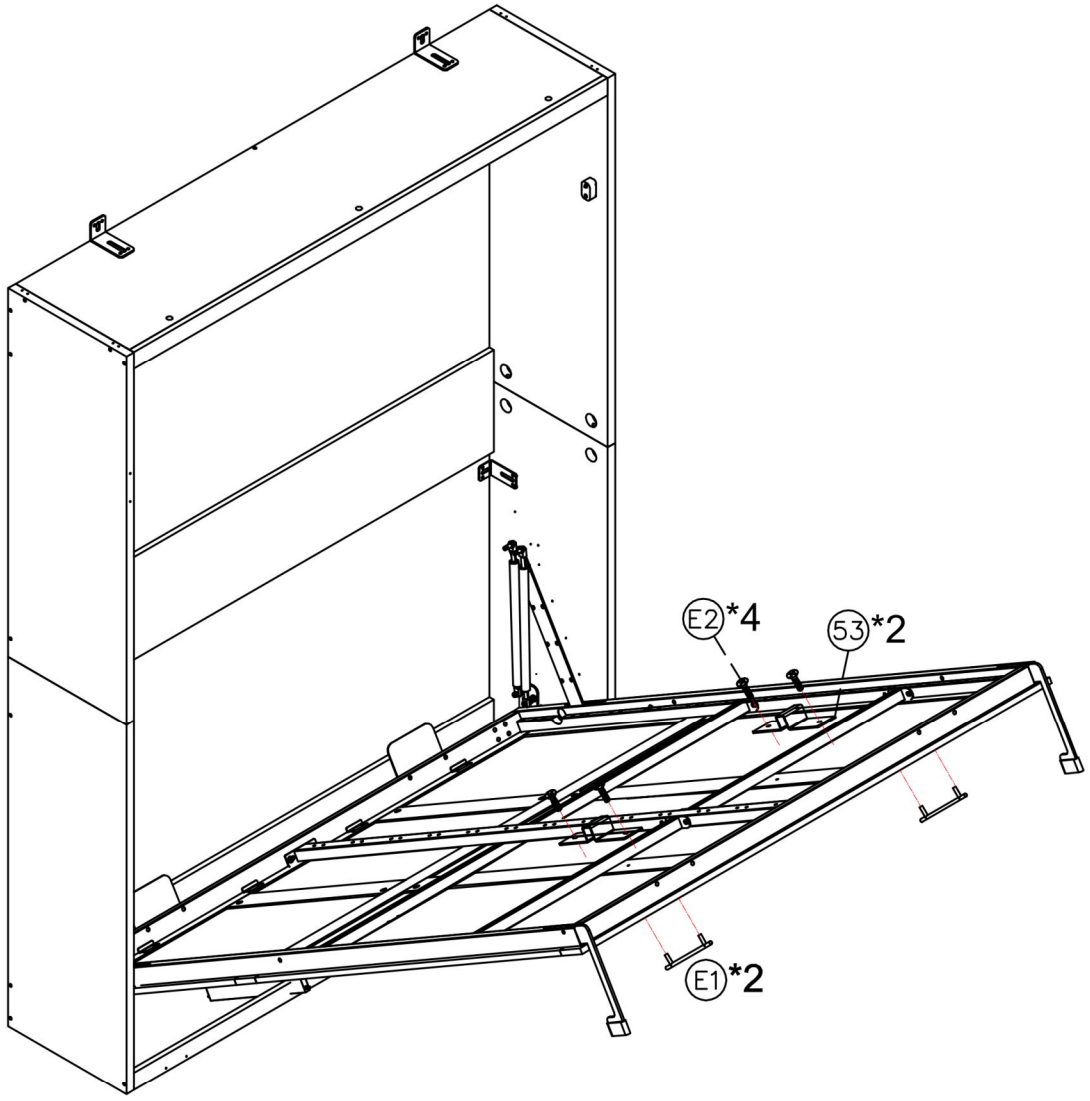

WARNING

For your safety:

Please use no less than 88lbs of weight to press the bed frame in the subsequent installation process, to avoid accidental injury caused by there bound of the bed frame!

53*2 E1*2 E2*2

All rights reserved.

STEP17

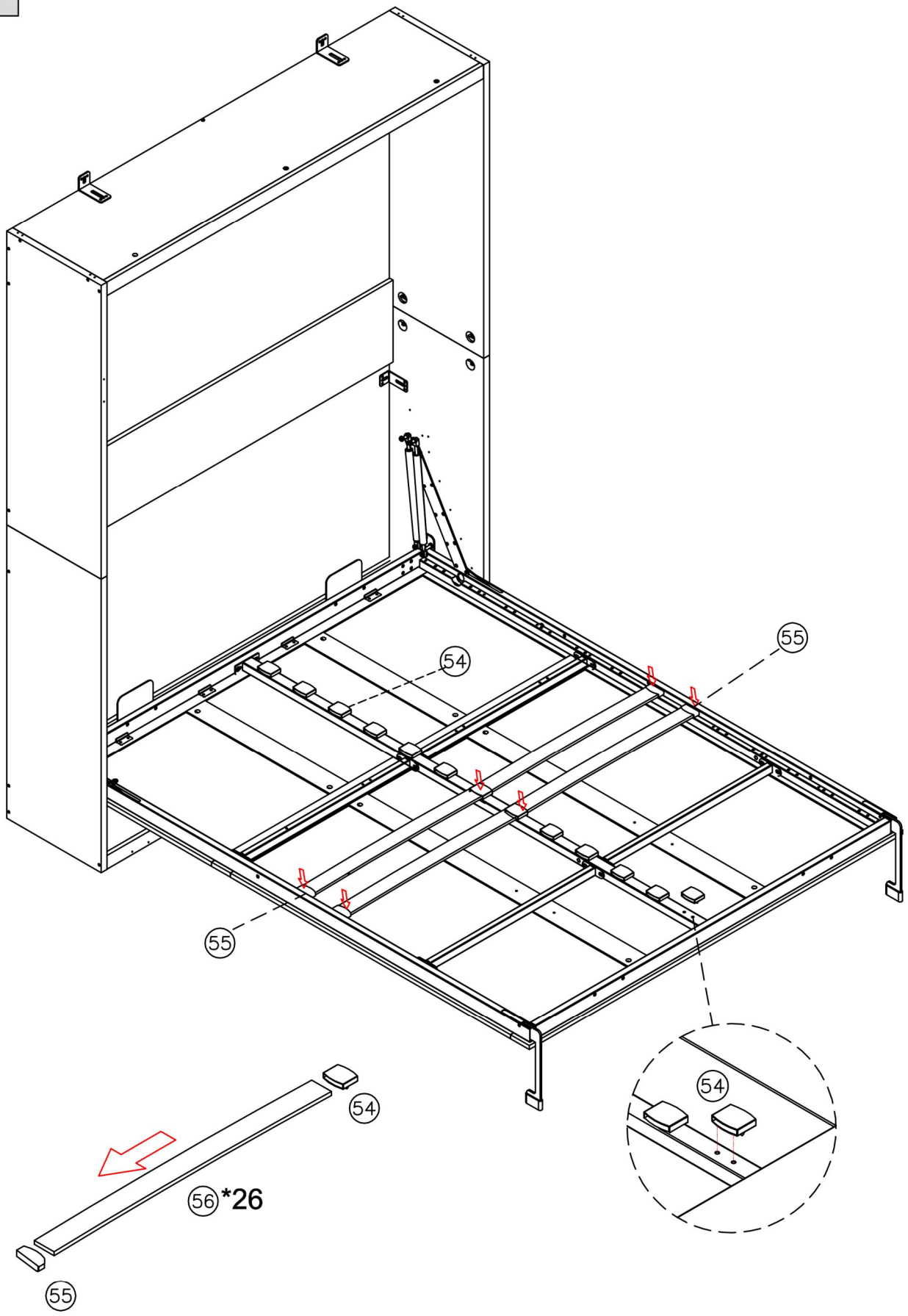

All rights reserved.

STEP18

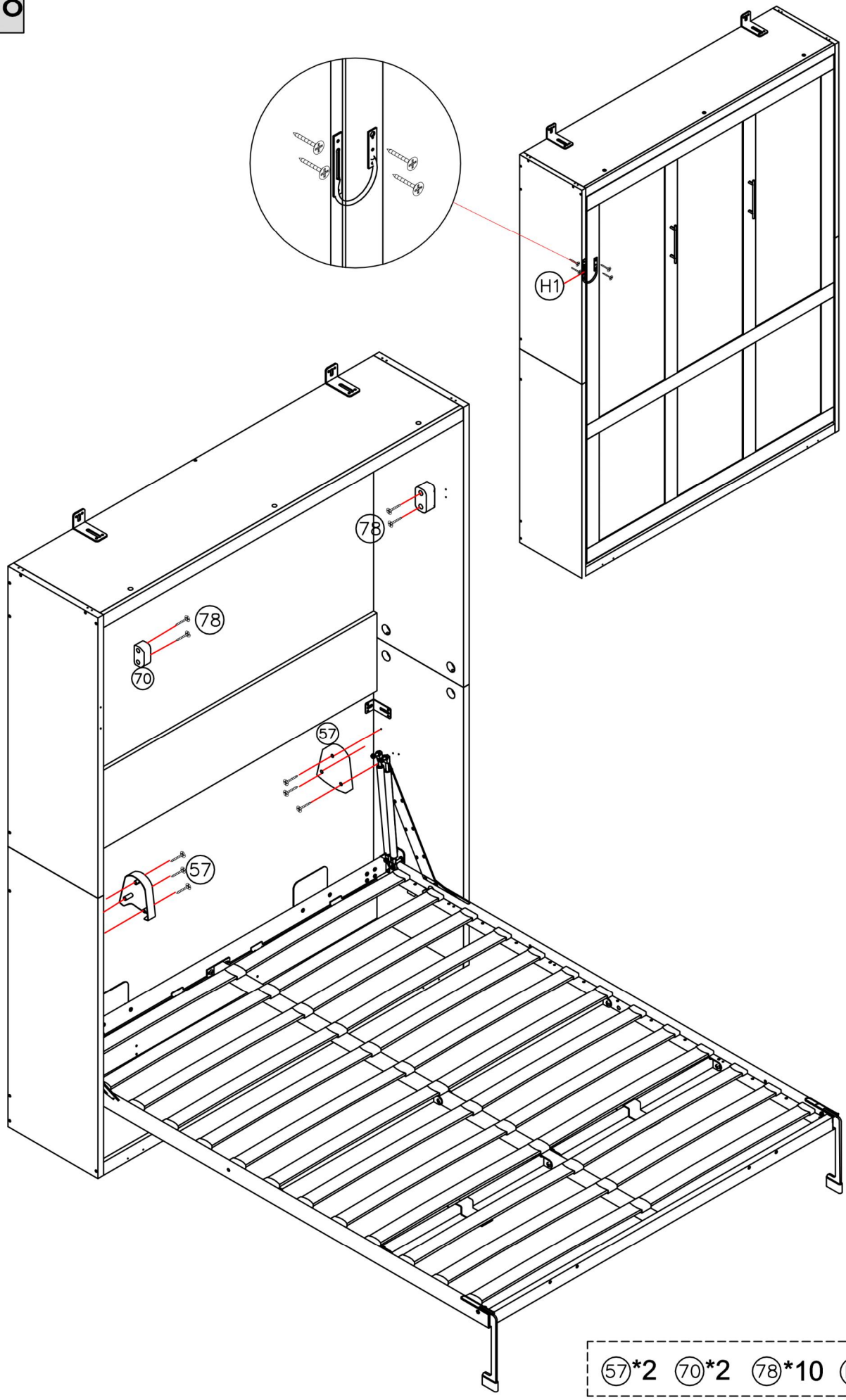

57*2 70*2 78*10 H1*1

All rights reserved.

STEP19

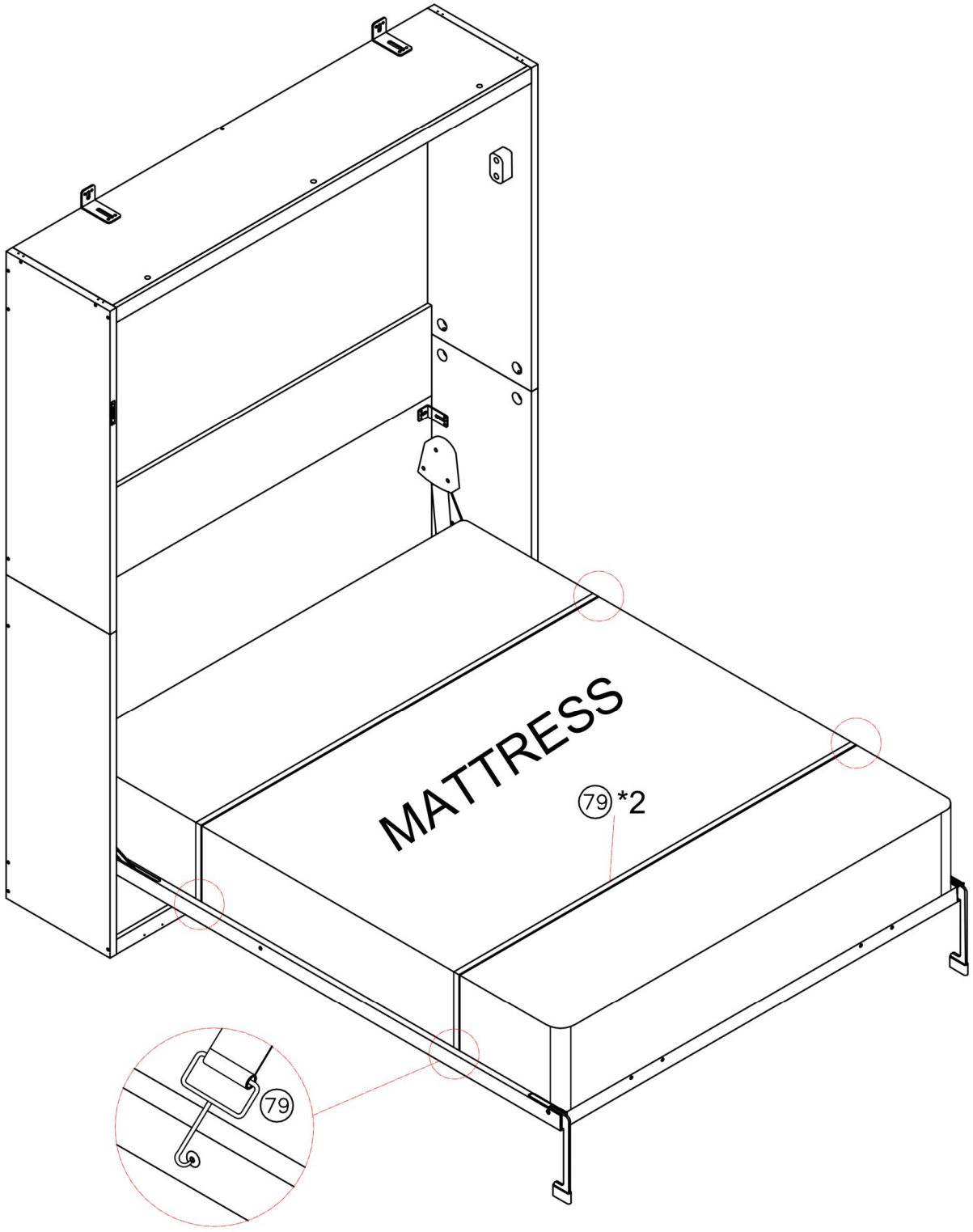

The inside hook to fixed the mattress strap

Final Assembly!

79*2

All rights reserved.

Assembly Instruction

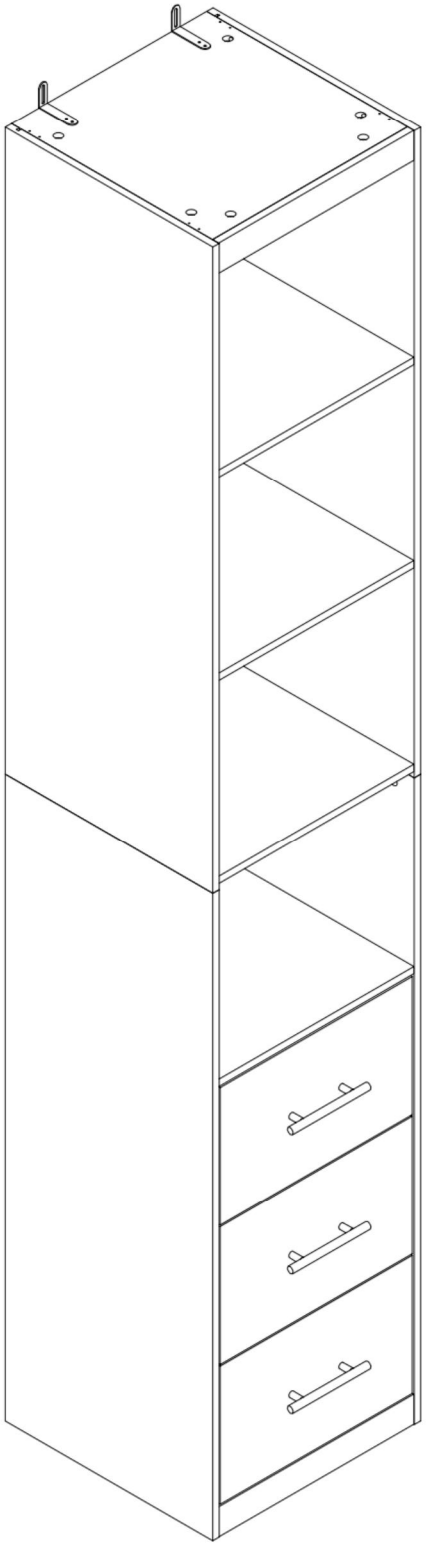


Recommended 2 Person

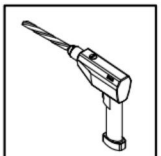
Tools Required


Tools Required


Tools Required


Recommended for professional installation

All rights reserved.

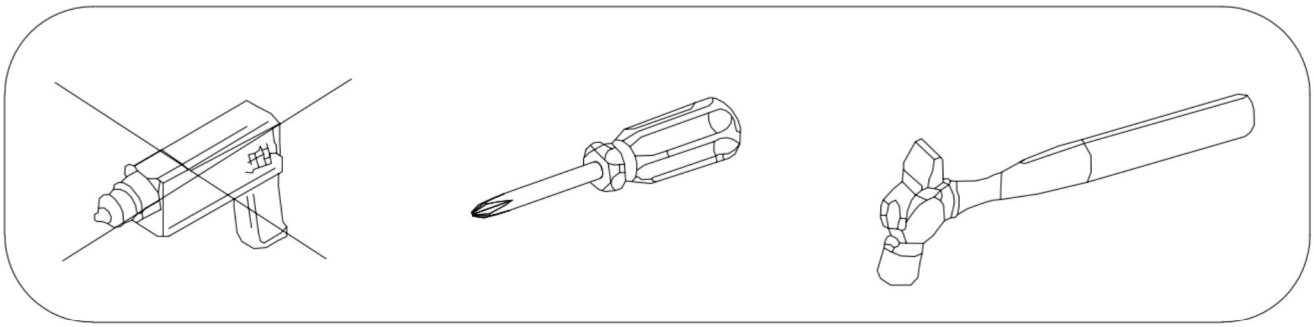

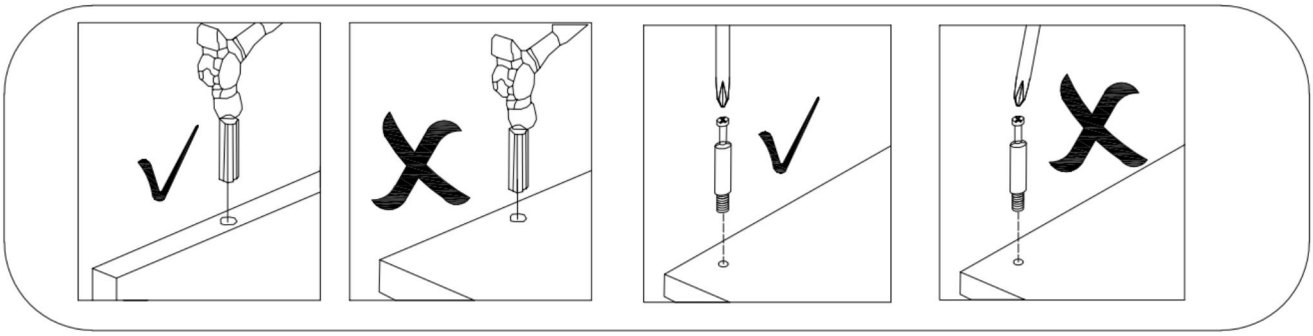

 ϕ7*32mm A*44	 ϕ15*9mm B*44	 ϕ8*30mm C*32	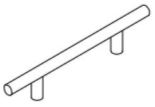 D*3
 ϕ4*20mm E*6	 ϕ4*35 F*14	 ϕ3.5*12mm G*60	 H*2
 I*2	 J*12	 K*2	 L:350 L*3

Using Camlocks(Single head cam)

Step 1

Connect the male camlock as directed in the assembly instructions using a screwdriver.

1

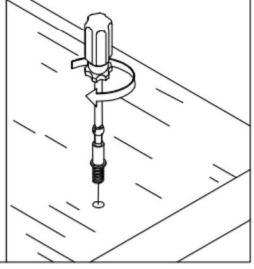

Step 2

Push the male camlock into the entry hole.

2

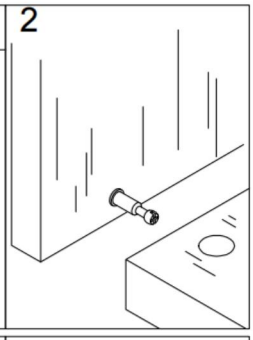

Step 3

Insert the female camlock as shown in the instruction.

Note: ensure that the arrow on the top of the camlock points towards the entry hole for the male camlock.

3

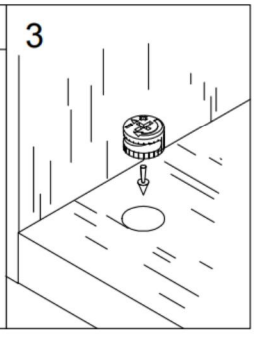

Step 4

Turn the female camlock 180 degrees clockwise with a screwdriver to complete the locking.

4

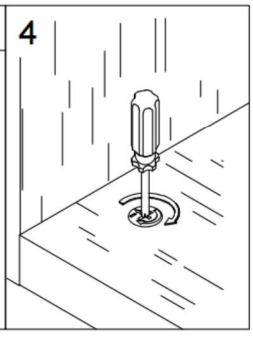

All rights reserved.

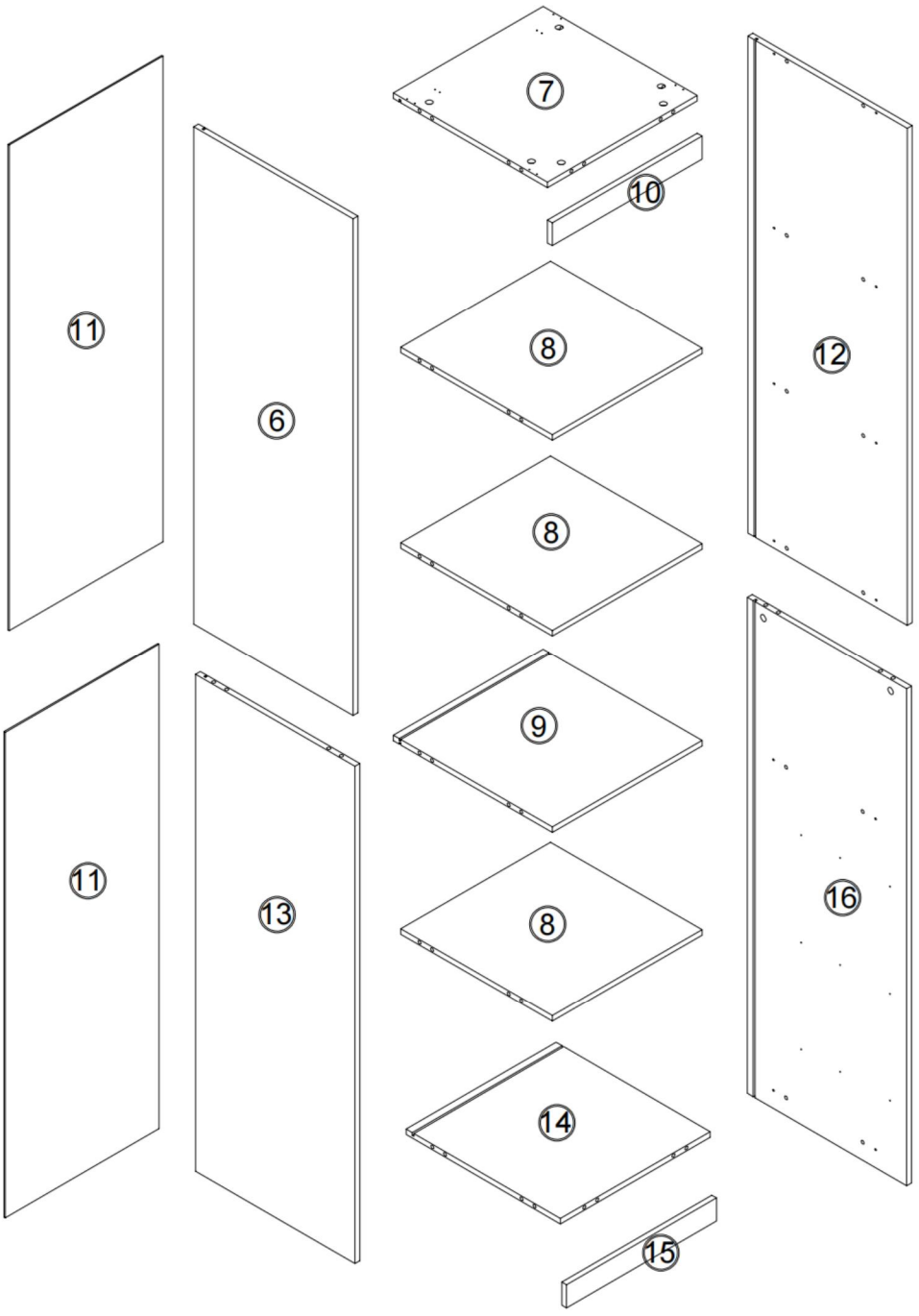

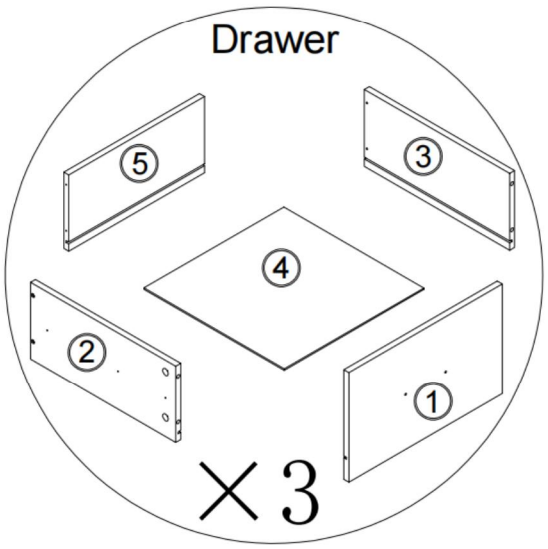

All rights reserved.

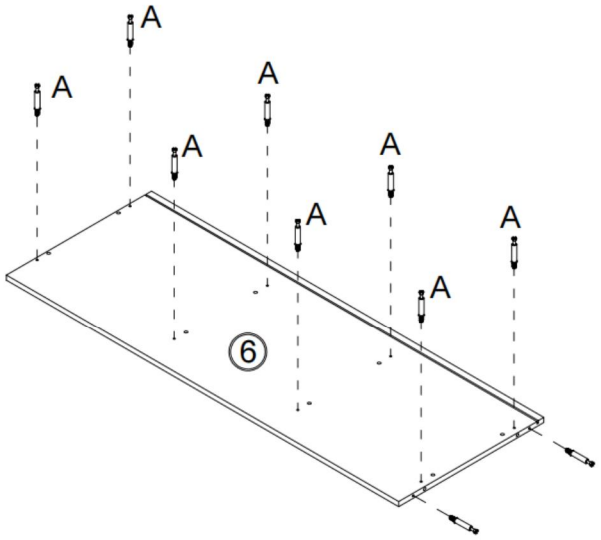

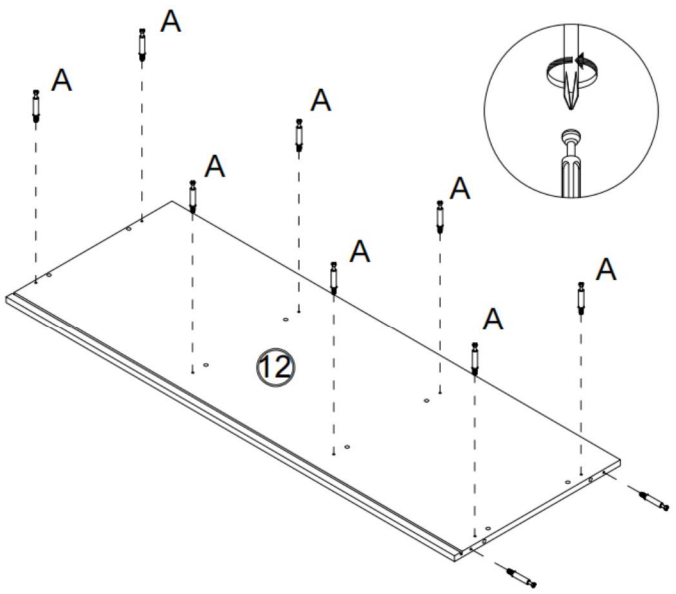

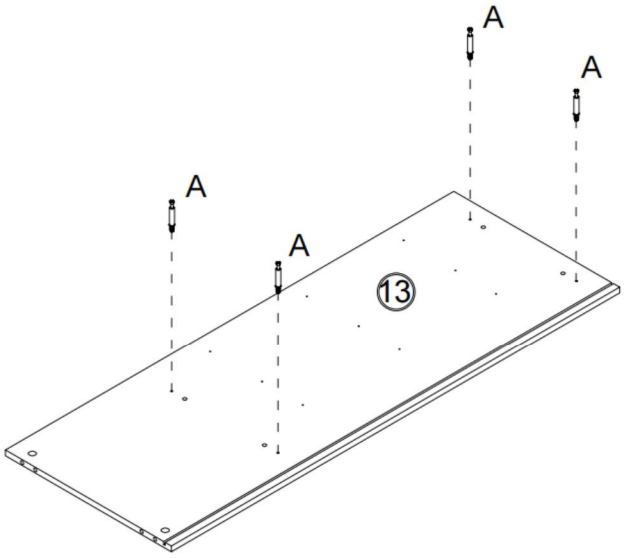

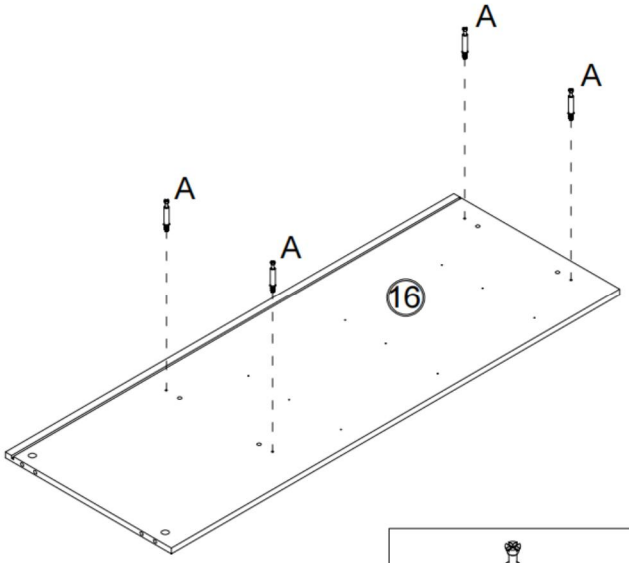

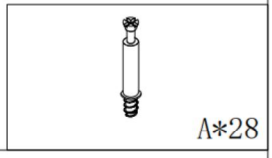

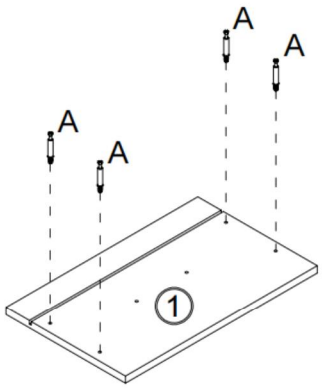

×3

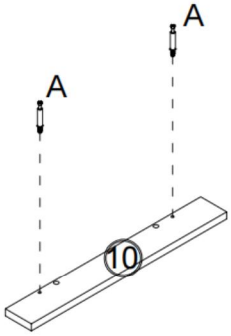

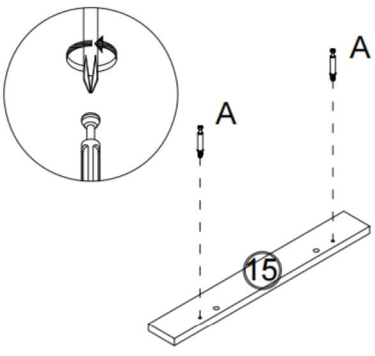

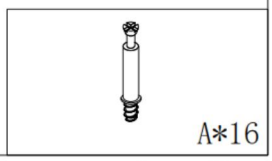

All rights reserved.

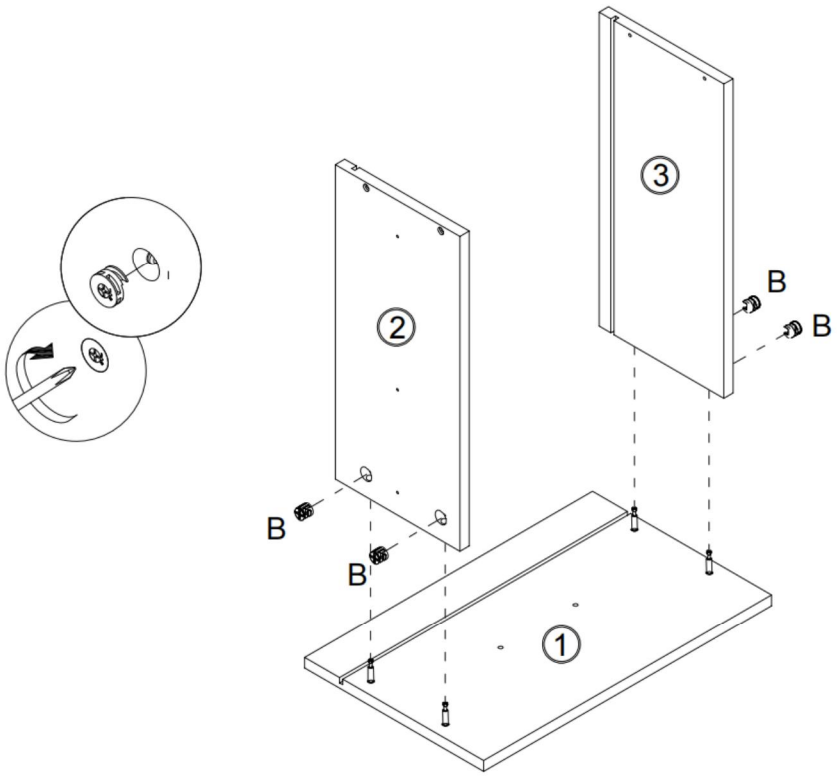

×3

B*12

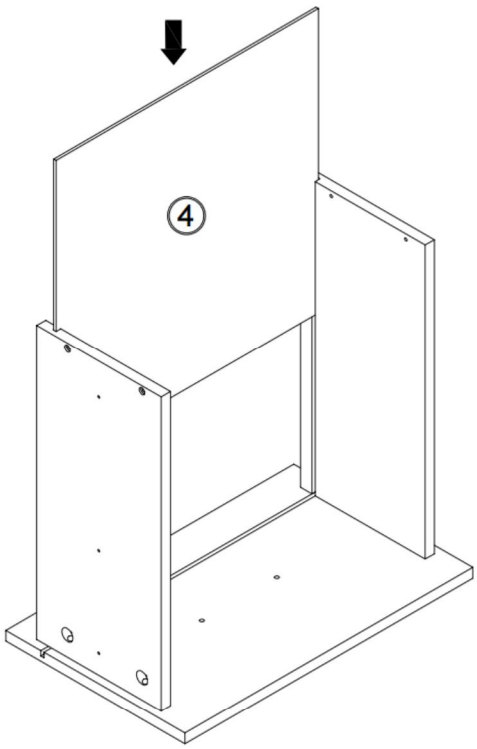

×3

All rights reserved.

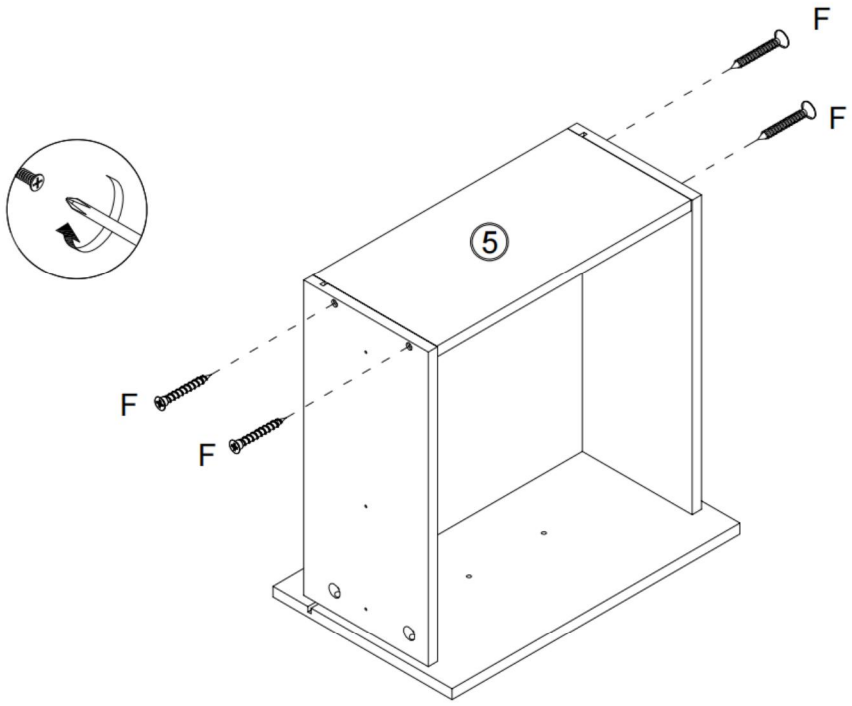

×3



F*12

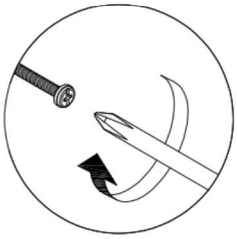

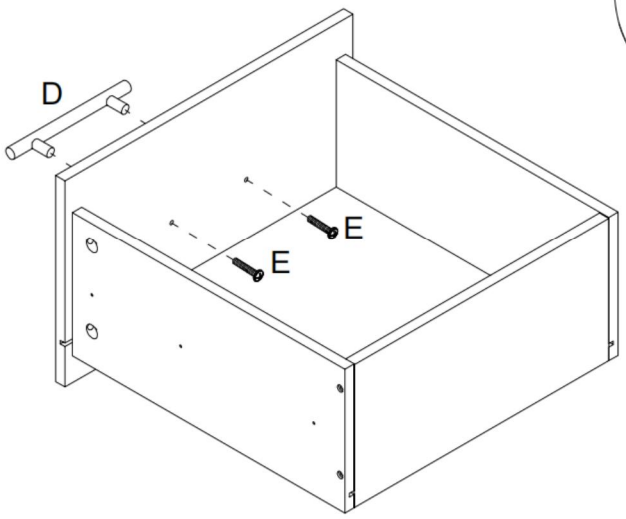

×3

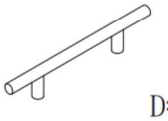

D*3



E*6

All rights reserved.

How To Separate The SIlding Rail:

1） Pull the slider in the direction of the arrow until it stops, then flip it over.

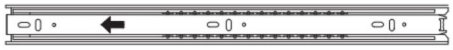

2） Push the plastic lever down and pull the slider apart at the same time.

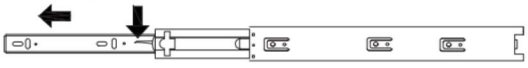

3) After disassembly





How to Assemble the Slider

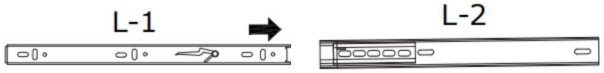

Align the outer track(L-2) with the center of the inner t rack(L-1) and push in.

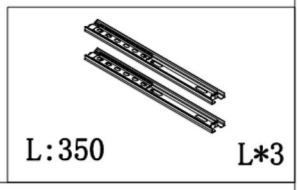

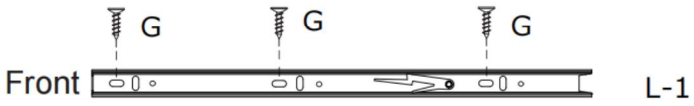

Inner Track Adjustment:
If the drawer height is uneven, you can adjust the slide position up or down to balance it.

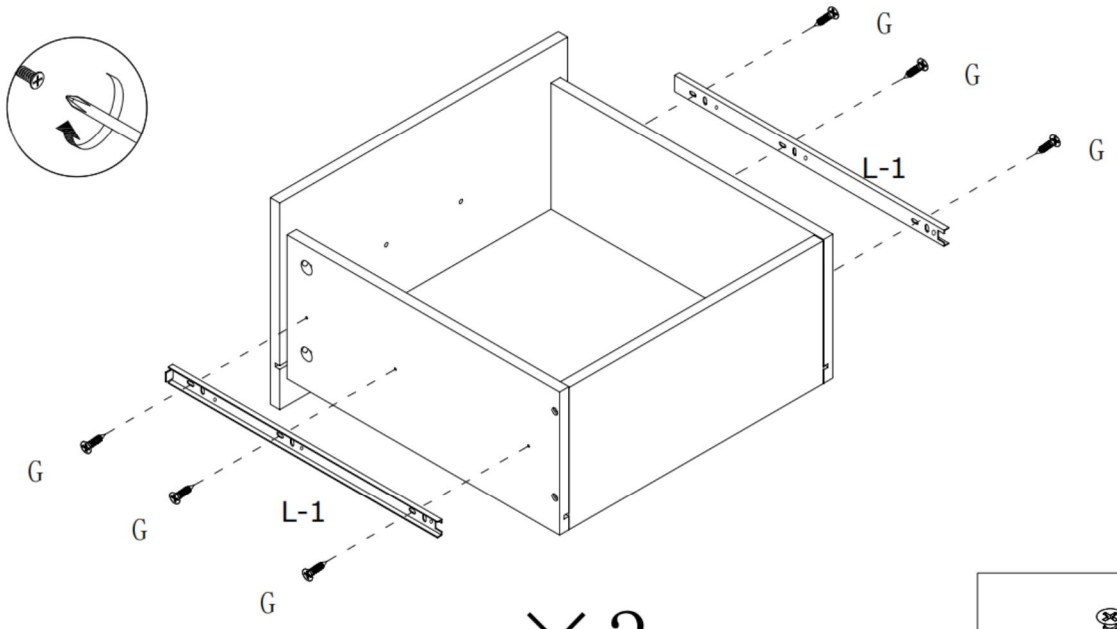

×3

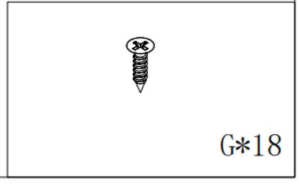

All rights reserved.

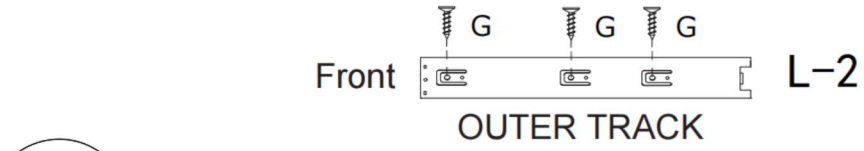



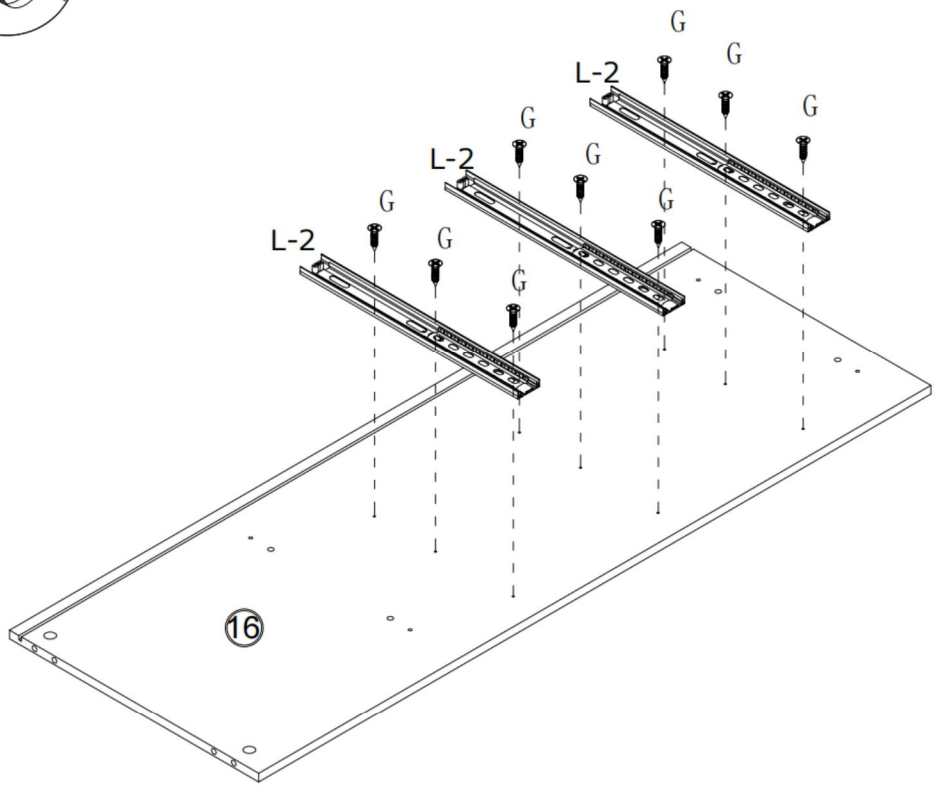

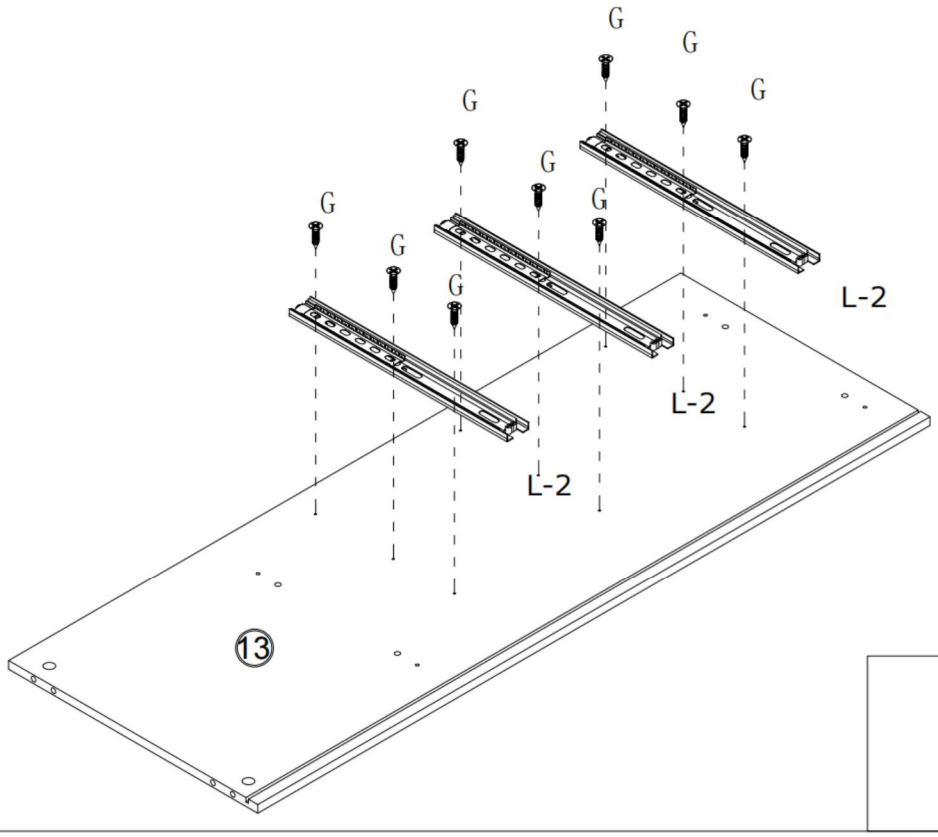

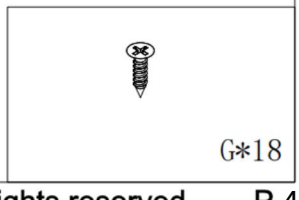

All rights reserved.

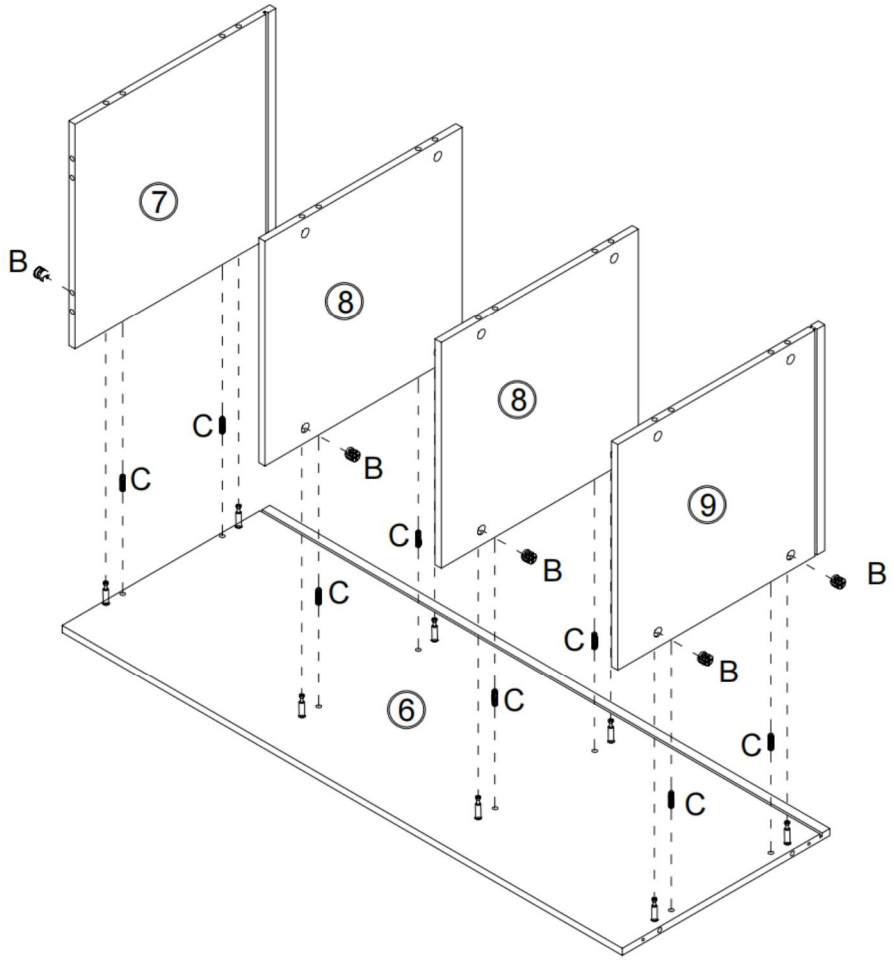

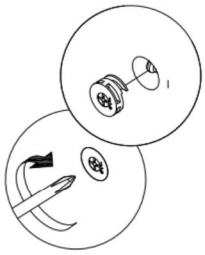

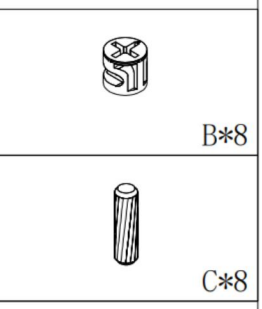

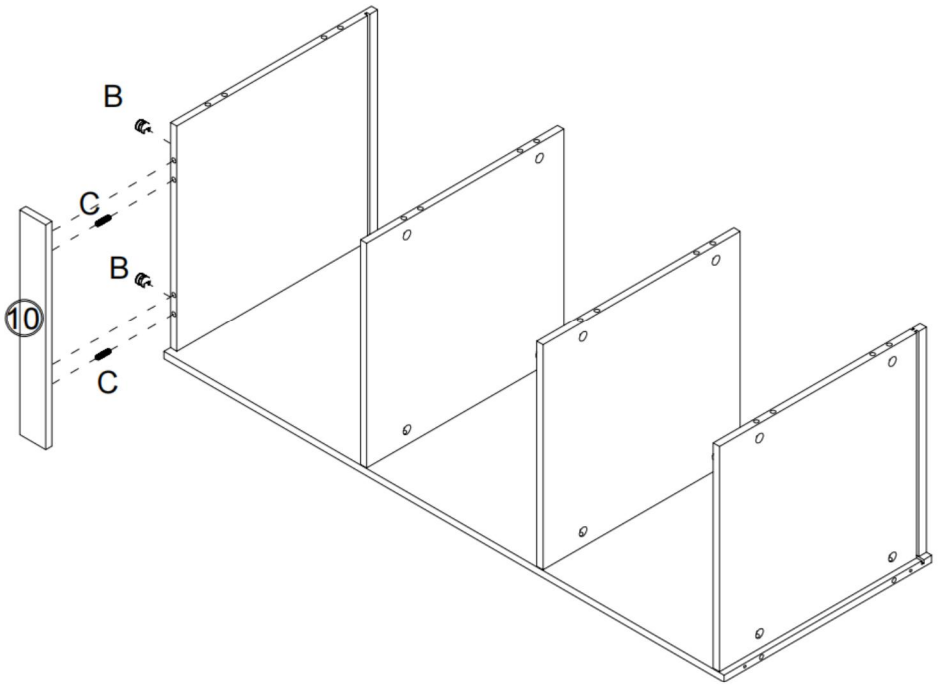

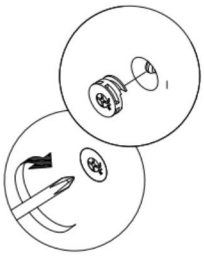

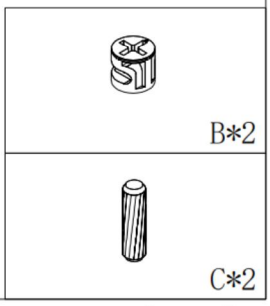

All rights reserved.

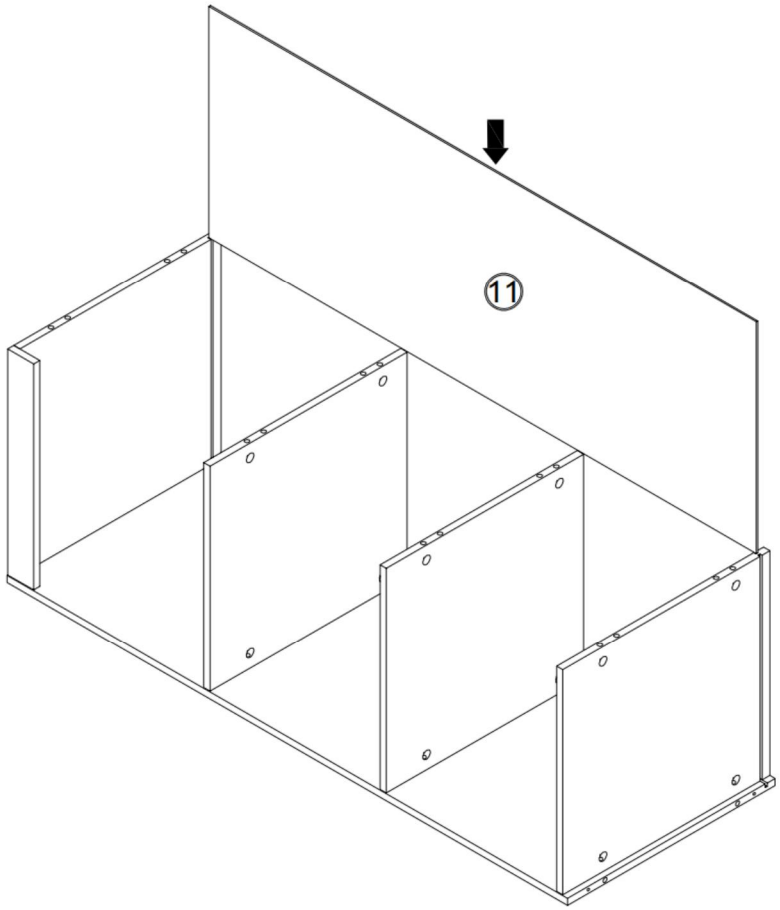

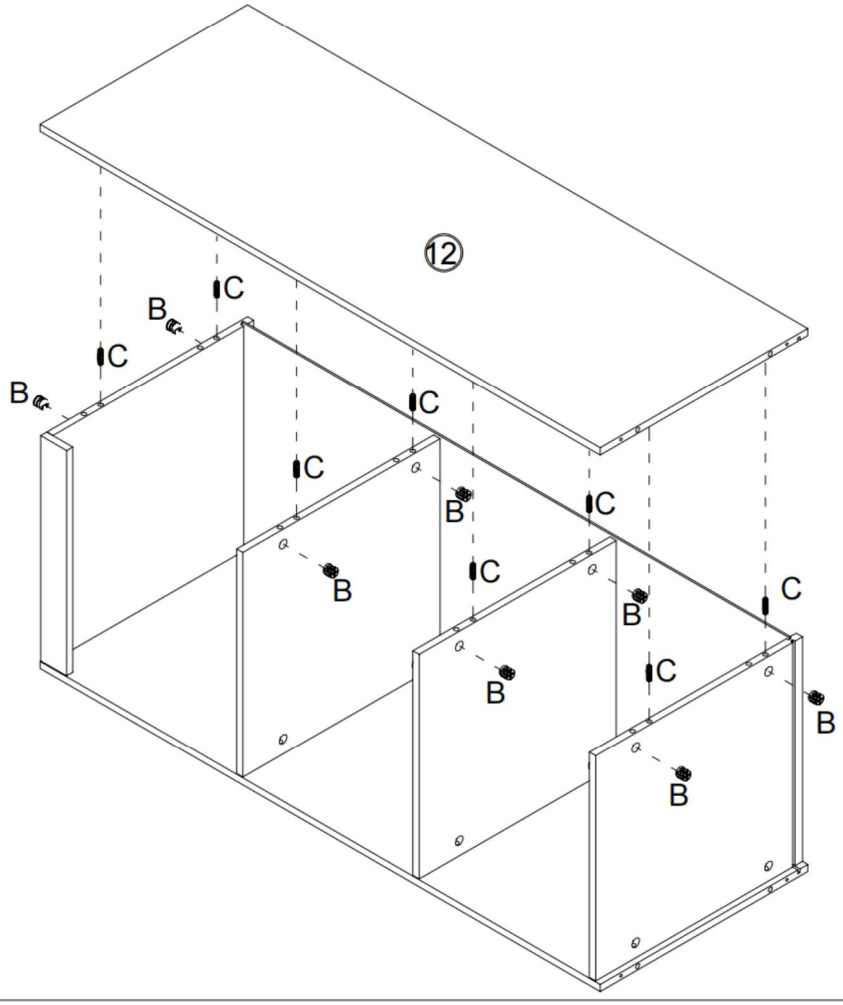

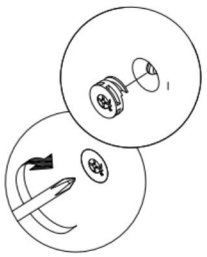

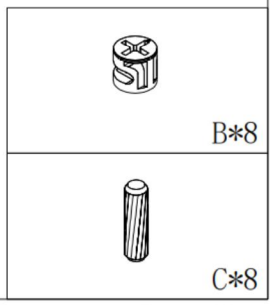

All rights reserved.

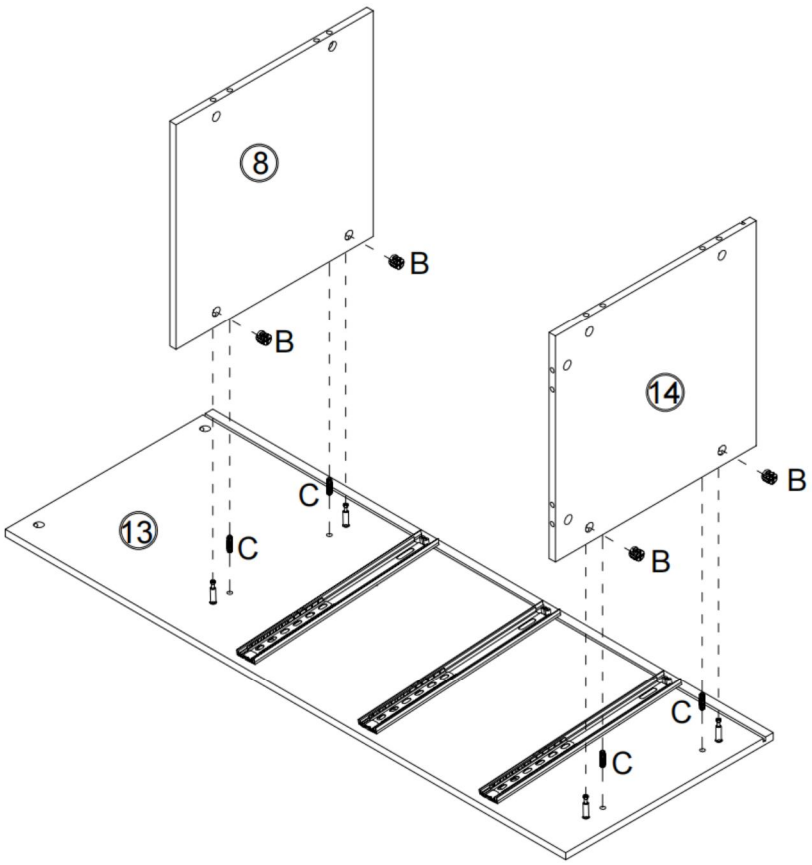

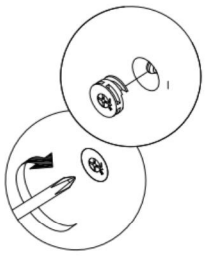



B*4



C*4

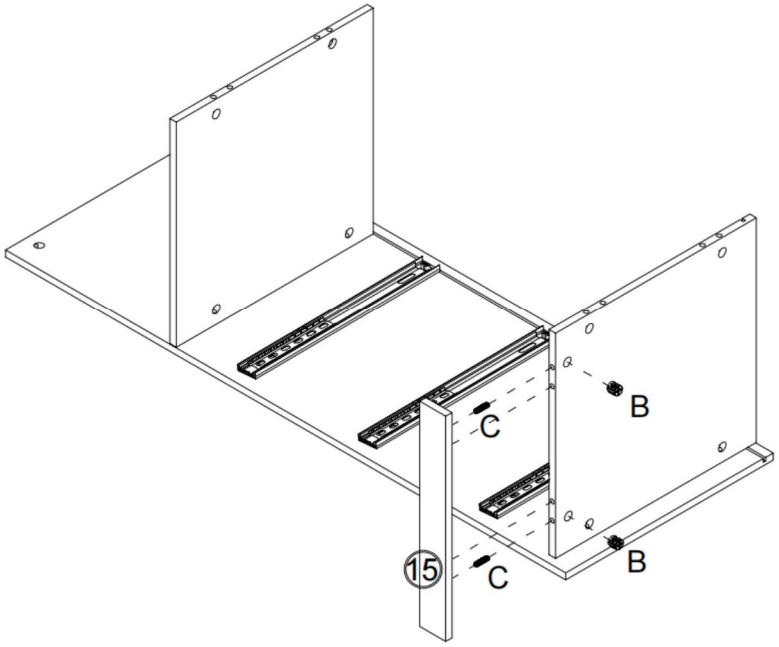

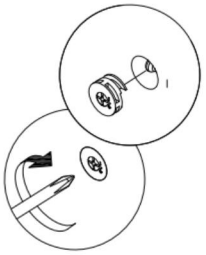



B*2



C*2

All rights reserved.

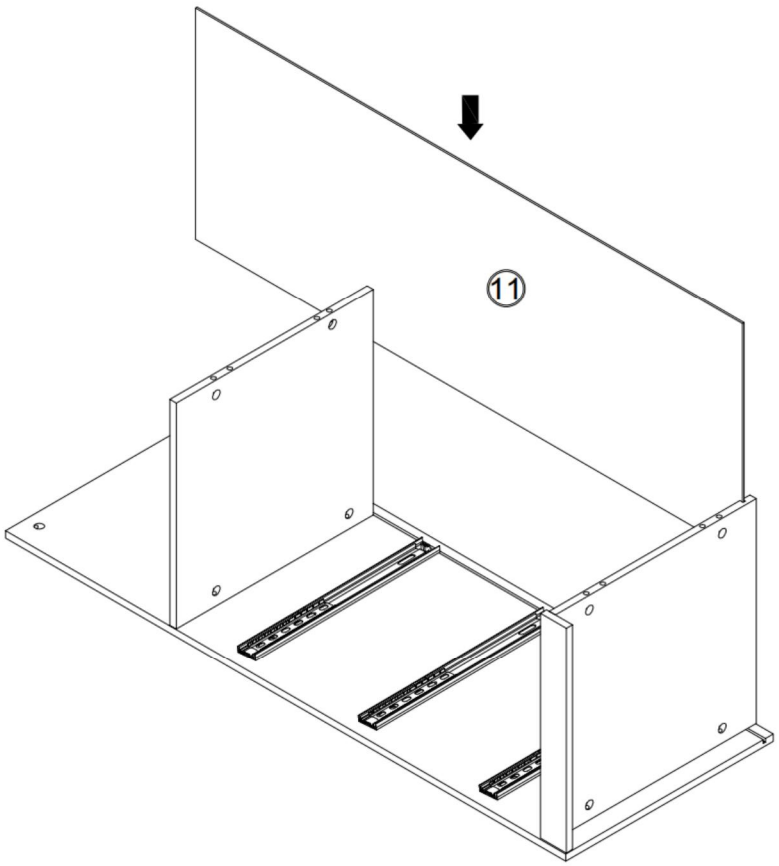

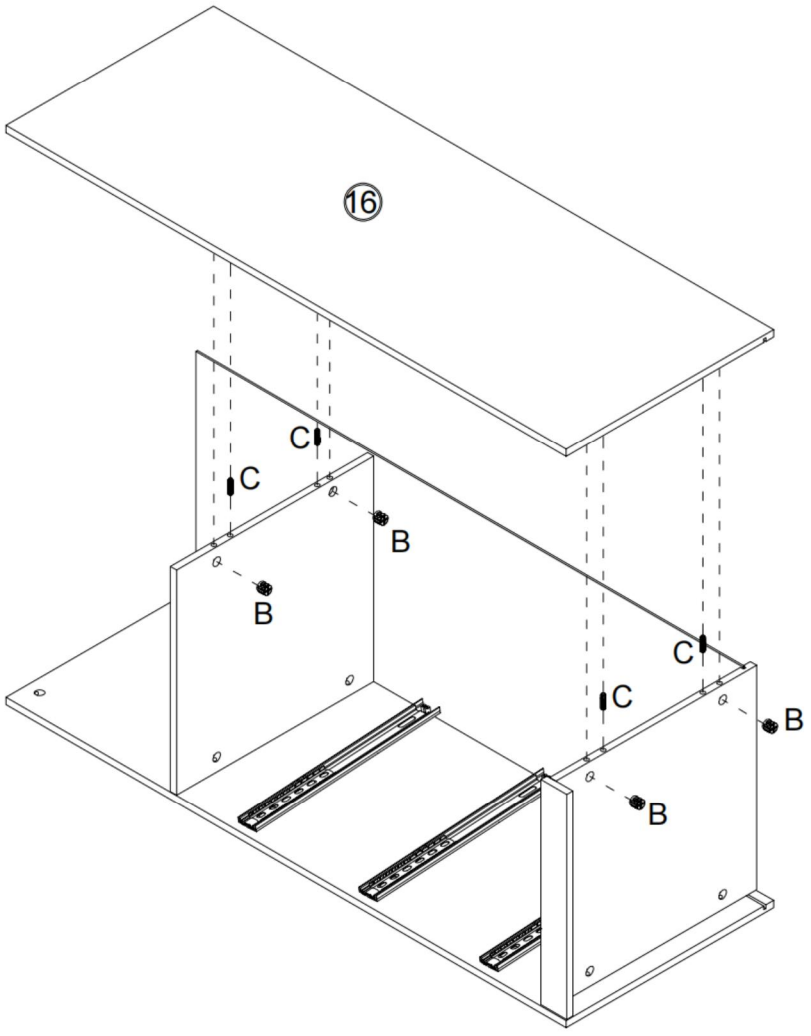

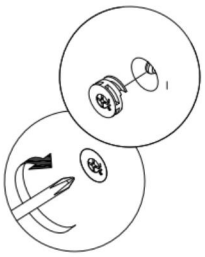

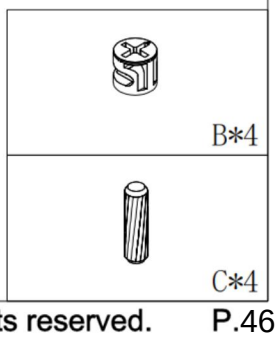

All rights reserved.

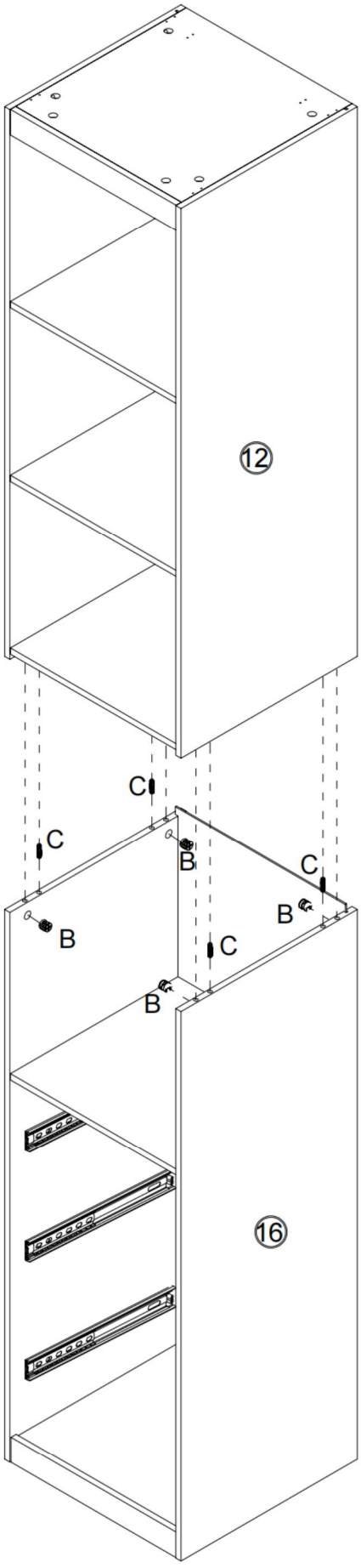

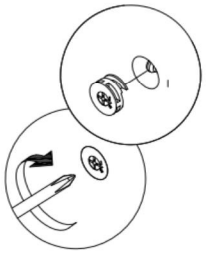



B*4



C*4

All rights reserved.

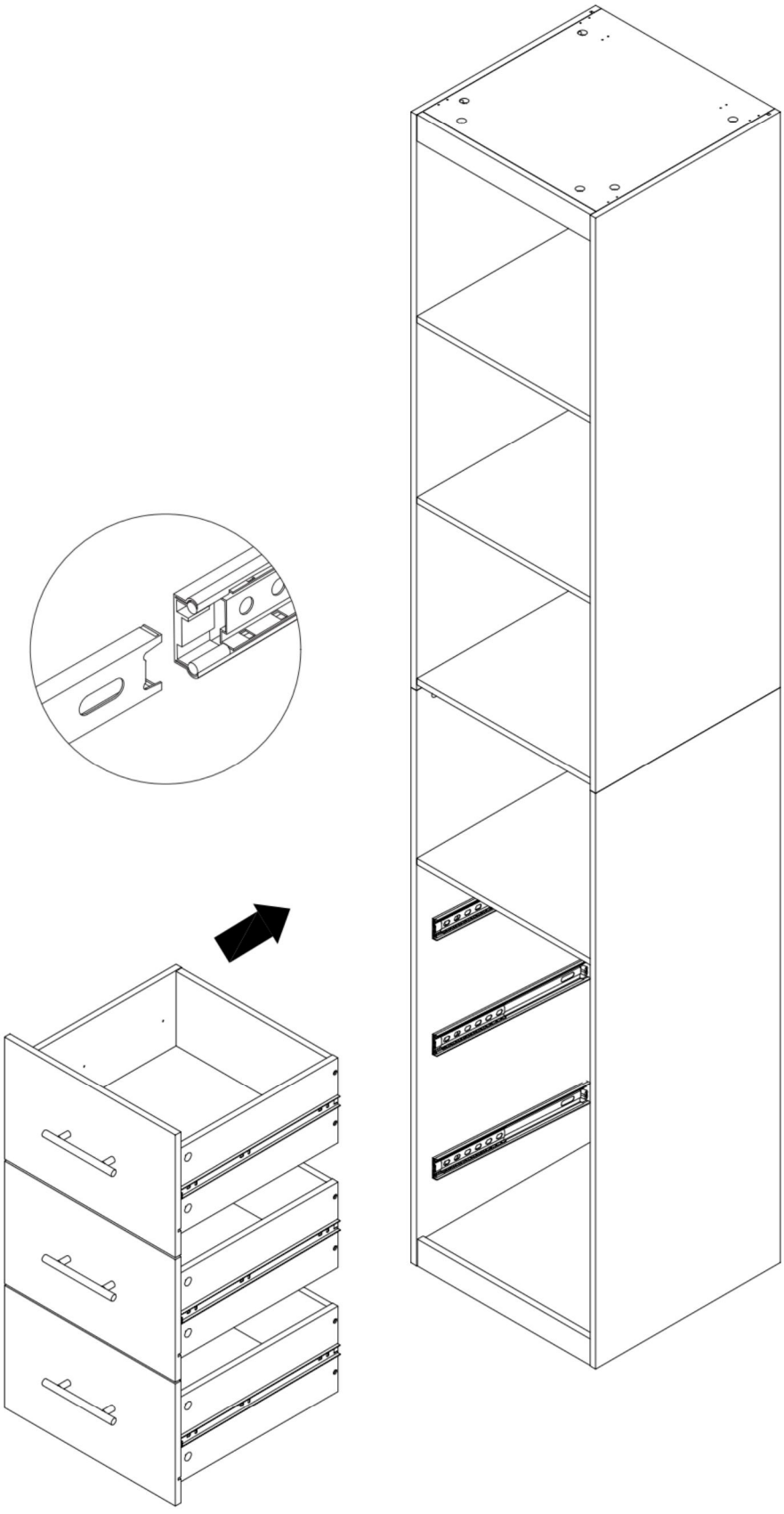

All rights reserved.

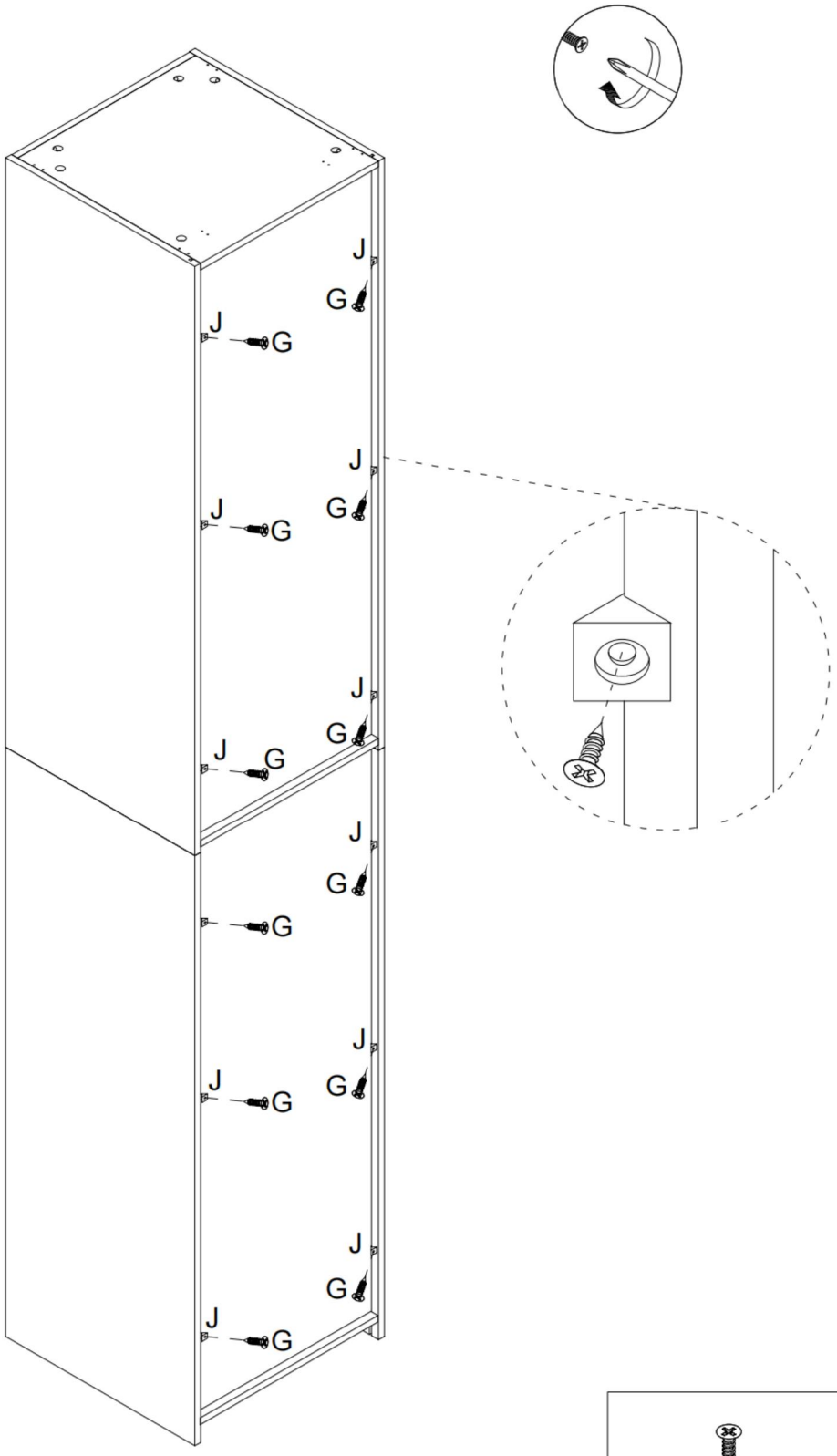

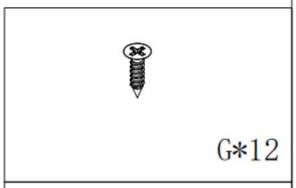

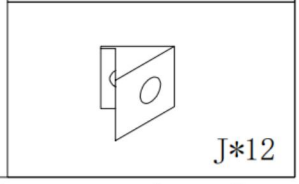

All rights reserved.

⚠ SAFETY FIRST: WALL ANCHORING IS NON-NEGOTIABLE

MURPHY BEDS MUST BE SECURELY ANCHORED TO STRUCTURAL MEMBERS. NEVER MOUNT SOLELY TO DRYWALL. IMPROPER INSTALLATION CAN CAUSE SERIOUS INJURY OR DEATH.

⃠ ABSOLUTELY FORBIDDEN HARDWARE

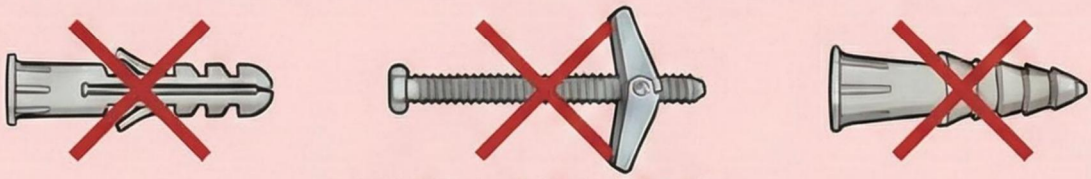

PLASTIC ANCHORS - WILL FAIL

A. WOOD STUD WALL

HOW TO IDENTIFY



KNOCK ON A HOLLOW WALL



STUD FINDER TOOL (MITS



STUDS SPACED IS 16" STUD

REQUIRED HARDWARE



HEAVY-DUTY SCREWS (MIN. 5/32" DIA., 2.5" LONG)

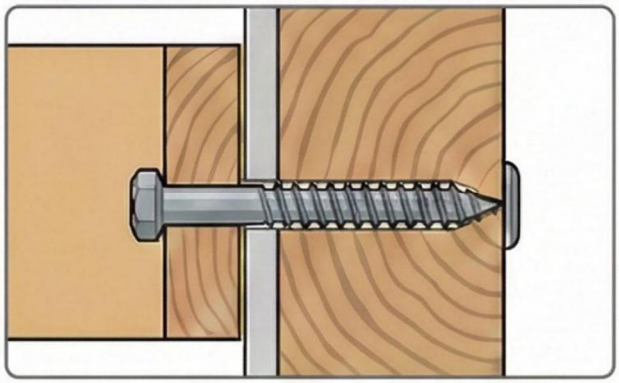

MUST PENETRATE WOOD STUD CENTER AT LEAST 2.5"

B. MASONRY/CONCRETE WALL

HOW TO IDENTIFY

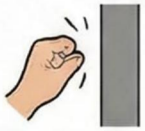

KNOCK ON A SOLID WALL



DRILL BIT CREATES GREY/RED DUST

REQUIRED HARDWARE



ALL-METAL EXPANSION BOLTS (MIN. 5/32" DIA., 2.5" LONG)

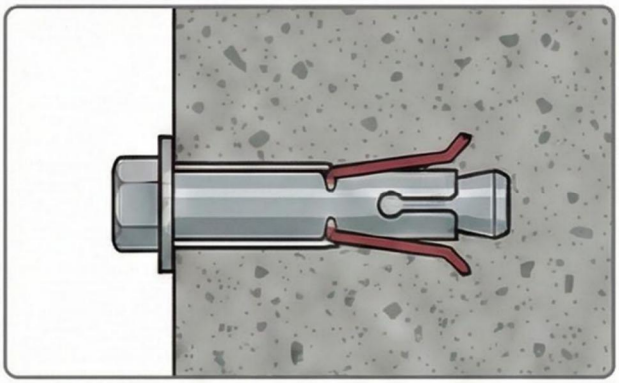

CLEAN HOLE OF DUST. DO NOT USE PLASTIC.

☑ FINAL SAFETY CHECKLIST

- ☑ VERIFY STUD CENTER BEFORE DRILLING
- ☑ ENSURE FLUSH WALL FIT (ADJUST BASEBOARD)
- ☑ PERFORM PULL TEST BEFORE MATTRESS LOAD
- ☑ AVOID HIDDEN WIRES/PIPES BEFORE DRILLING
- ☑ REGULARLY INSPECT AND MAINTAIN WALL ANCHORS
- ☑ CONSULT A PROFESSIONAL FOR WALL ASSESSMENT AND OPTIMAL HARDWARE; CUSTOMER ASSUMES ALL INSTALLATION LIABILITY

All rights reserved.

Wall attached item only:

A guide to wall mounting and fixings

Warning
Wall fixing screws are not included, since different wall materials require different types of screws / fixings. Please ensure you use the correct screws / fixings for your type of walls and seek professional advice if you are not sure.

Failure of the product due to incorrect fixings is the responsibility of the installer.

Important: When drilling into the walls always check that there are no hidden wires or pipes etc.

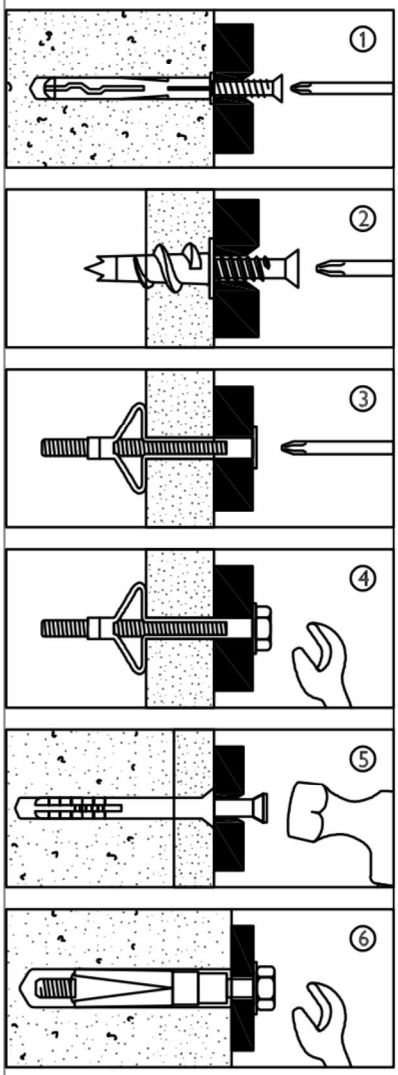

Types of walls
You can use one of the following types of wall plug if your walls are made of brick, breezeblock, concrete, stone or wood.

1. Genral Purpose wall plug
Generally aerated blocks should not be used to support heavy loads, use a specialist fitting in this case. For light loads, general - purpose wall plugs can be used.

2. Plasterboard wall plug
For use when attaching light loads on to plasterboard partitions.

3. Cavity Fixing wall plug
For use with plasterboard partitions or hollow wooden doors.

4. Cavity Fixing - Heavy Duty wall plug
For use when fitting or supporting heavy loads such as shelving, wall cabinets and coat racks.

5. Hammer Fixing wall plug
For use with walls stuck with plasterboard. The hammer fixing allows it to be fixed to the wall rather than the plasterboard. Always check the fixing is secure to the retaining wall.

6. Shield Anchor wall plug - Heavy loads
For use with heavier load such as TV and HI-Fi speskers and satellite dishes etc.

Care and maintenance
Safety: Periodically check all fittings and wall fixings to ensure they have not come loose and retighten as necessary.

All rights reserved.

This step is required to prevent the cabinet from tipping over.

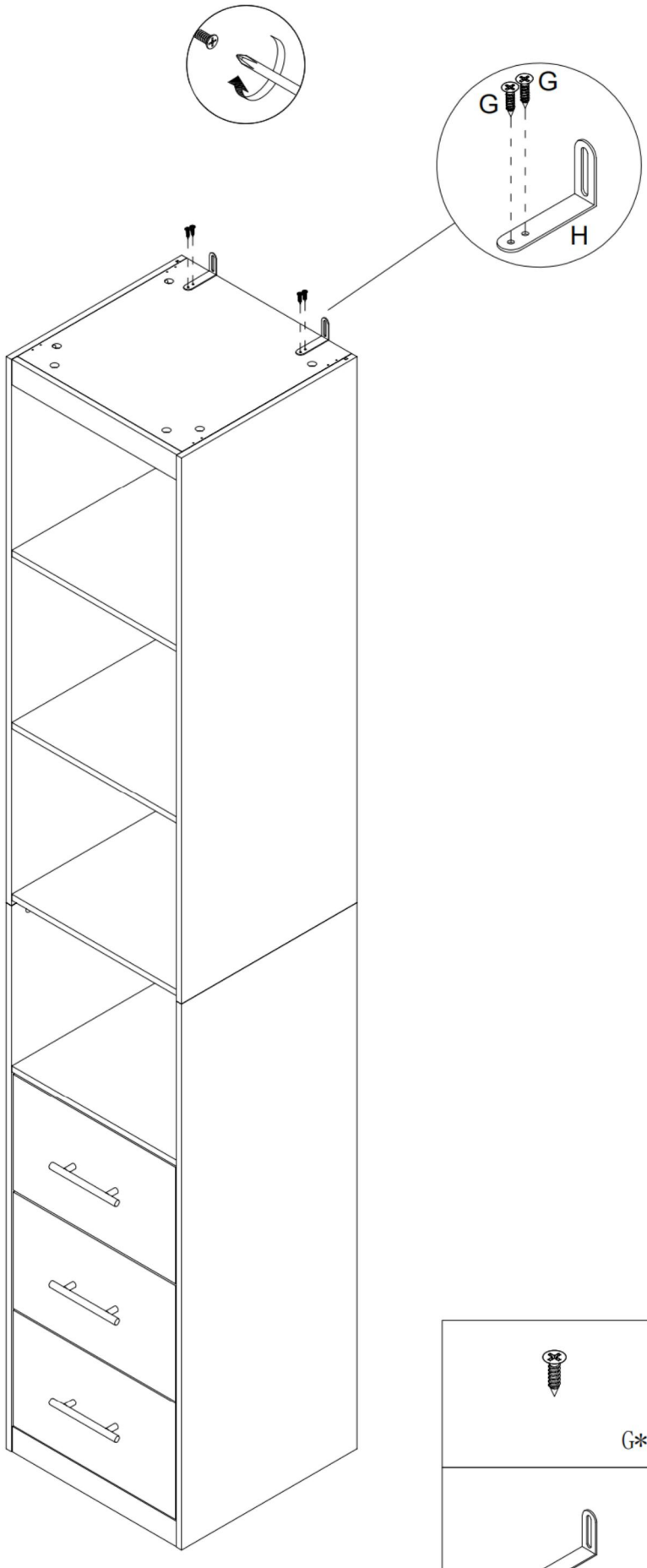

WARNING

For your safety
This step requires at least 4 people to complete together. One person is responsible for observing and guiding the moving direction of the cabinet body;two people respectively cooperate on both sides of the cabinet

body to move it to the accurate position; and one person is responsible for keeping it upright to prevent the cabinet body from tipping over.

All rights reserved.

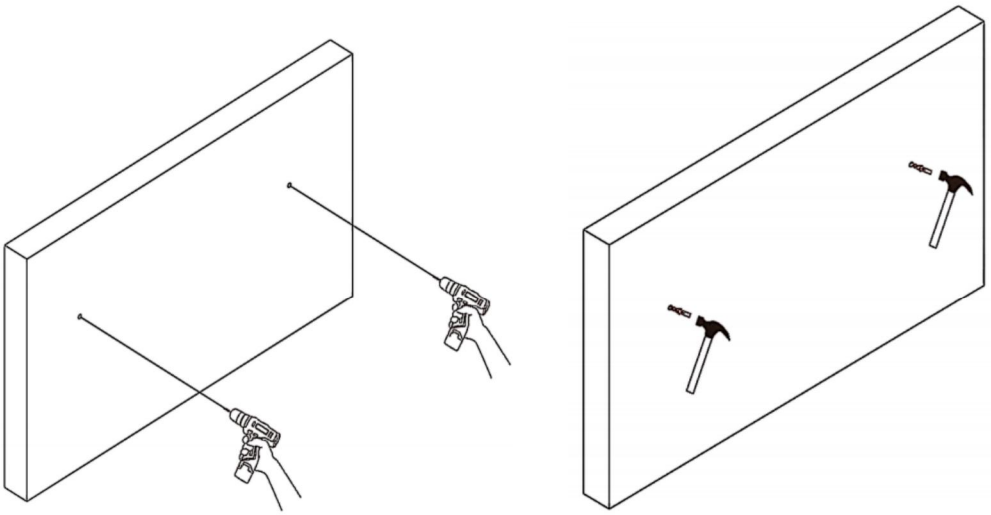



I*2

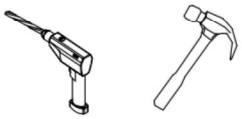

WARNING:

There is a risk of serious injury due to the wall-mounted bed tipping over.
To prevent the wall-mounted bed from tipping over,it must be permanently secured to a brick wall.If the wall structure is not masonry, qualified professionals are required to perform the wall anchoring.

Place two tall cabinets on each side of the bed, ensuring they are flush against the wall, and then mark the drilling positions on the wall.

Install a 0.24-inch drill bit on the electric drill to drill holes with a depth of 2.
16 inches.

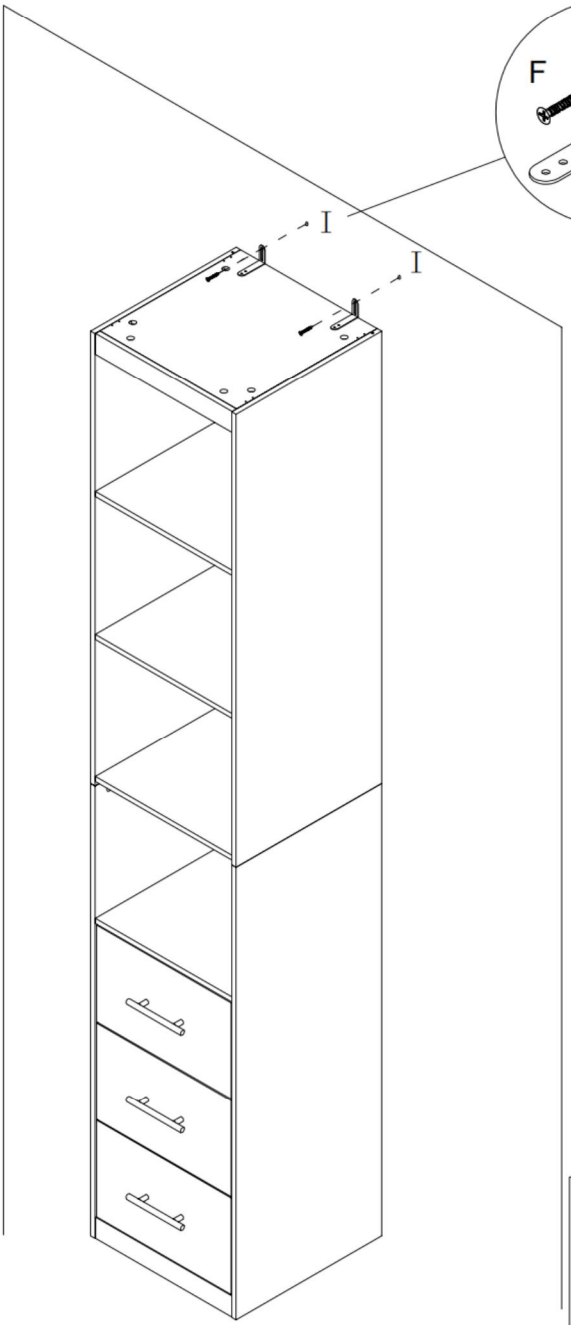



F*2

All rights reserved.

left

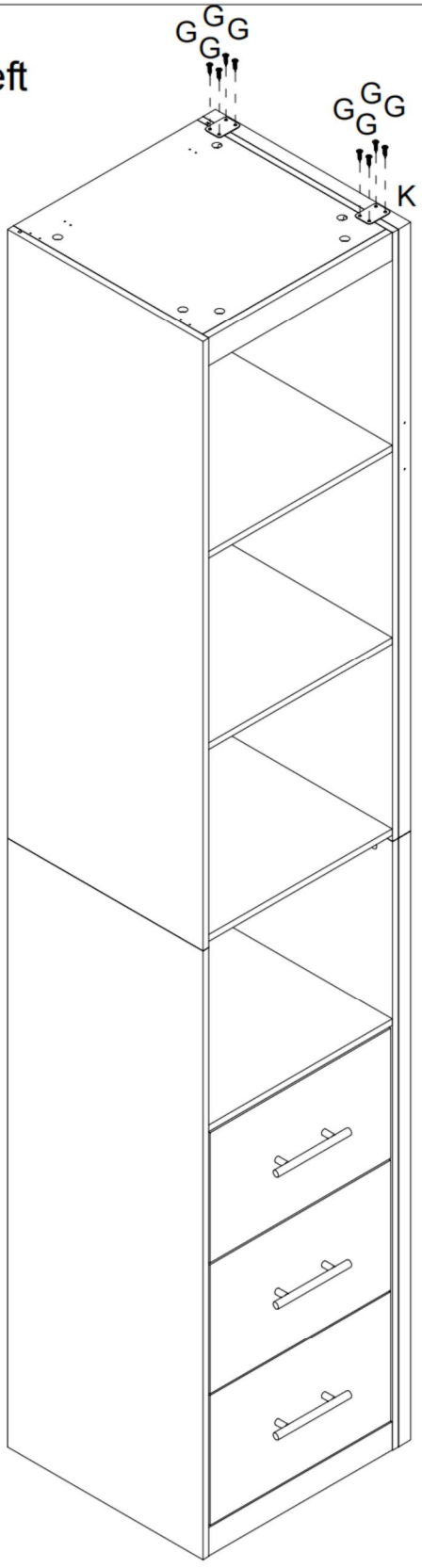



right

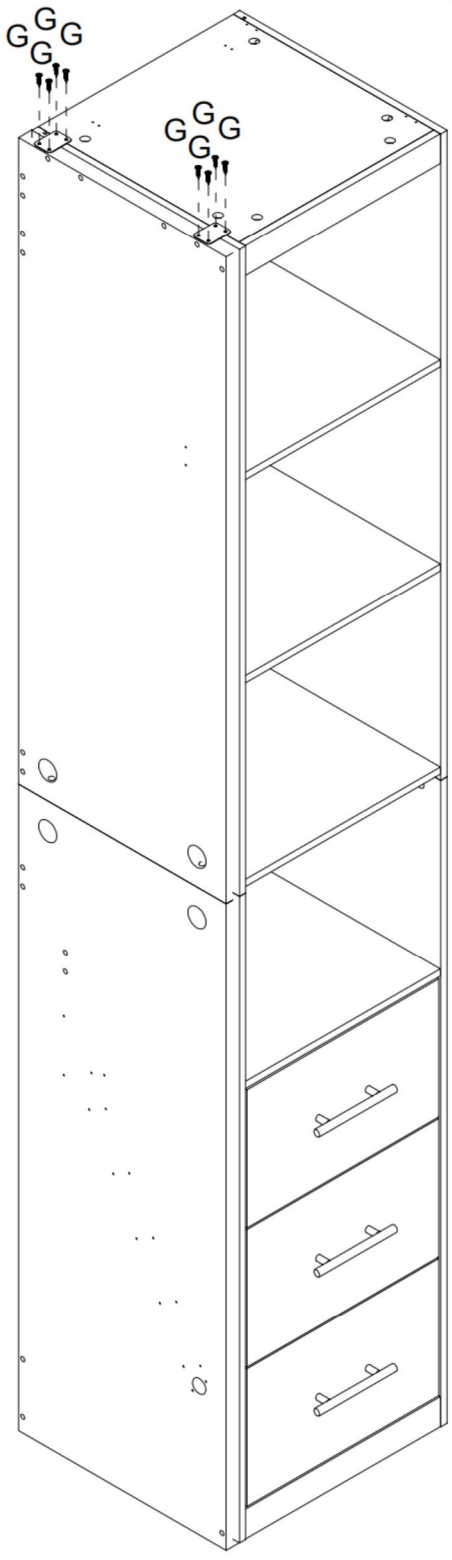

Attach this cabinet to the bed frame. Secure it as shown in the diagram according to the left or right orientation.

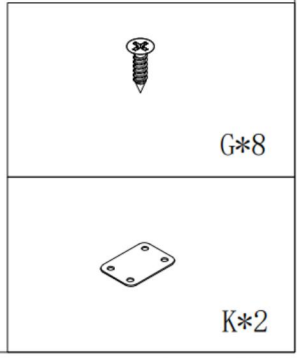

All rights reserved.

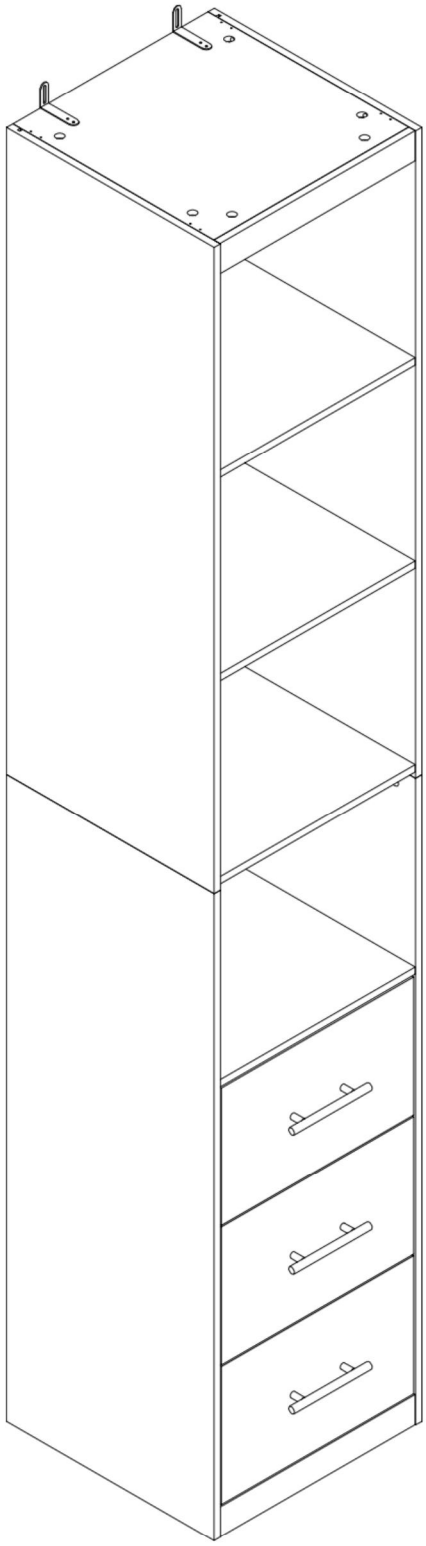

All rights reserved.