HMD FURNITURE

2+2DRAWER CHEST
Assembly Instructions



PLEASE READ this instructions carefully before assembly the product.

Please open the outer carton carefully and confirm all parts and fixings condition according to the instruction before assembly.

If there is a shortage of parts or hardware or any questions, do not directly return or give a negative feedback, please contact us by this e-mail:help@furniturehmd.co.uk

Our professional after-sales service staff will give you a satisfactory answer within 24 hours.

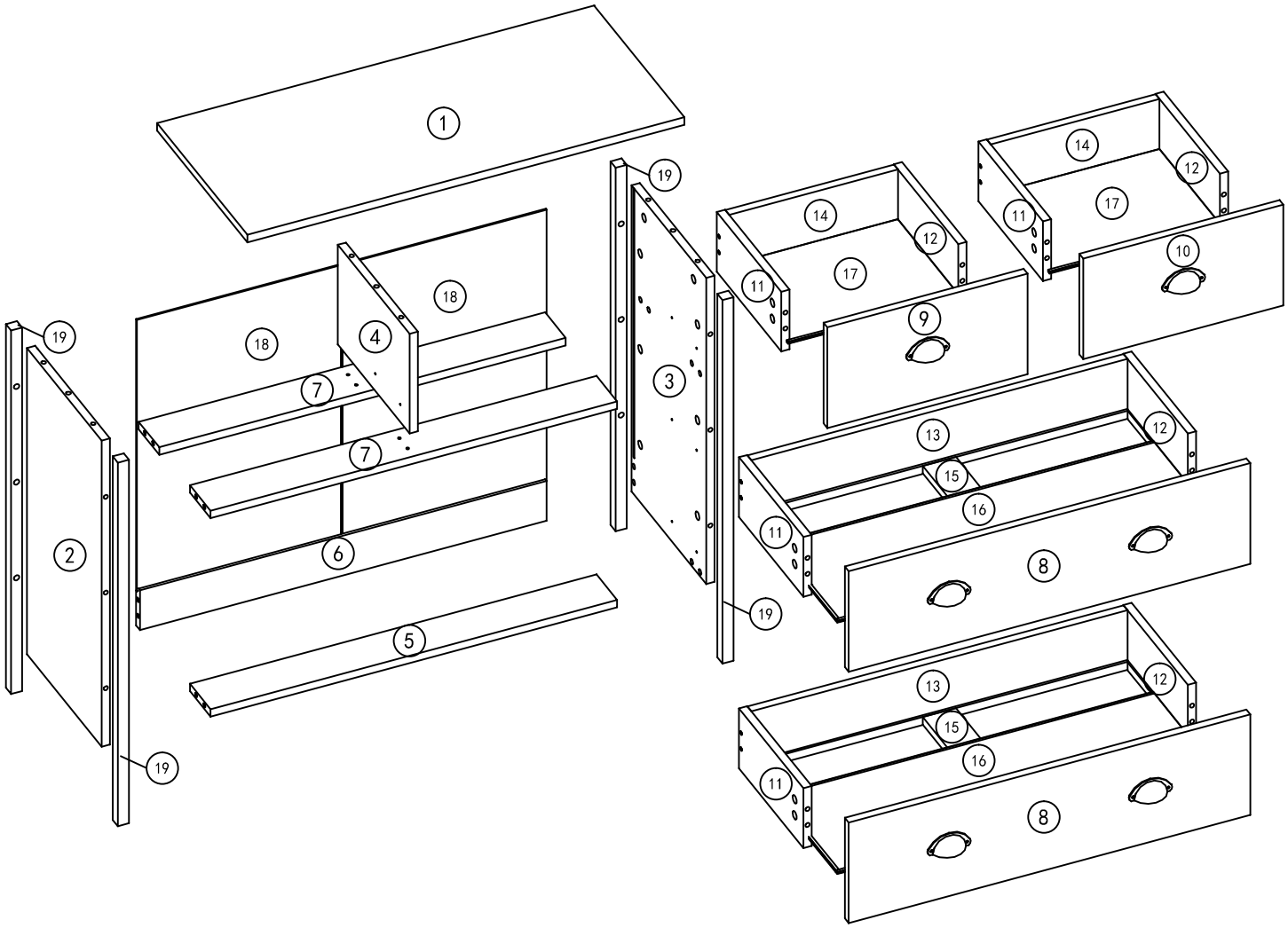

A 54PCS 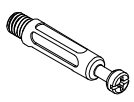	B 54PCS 	C 3PCS 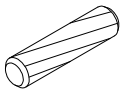	D 4SET 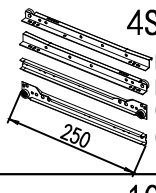	E 6PCS 
F 22PCS M3.5*35 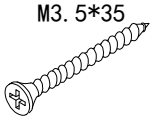	G 32PCS M3.5*14 	H 1PCS 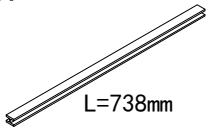	J 10PCS 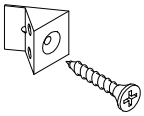	K 2PCS 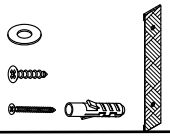

1

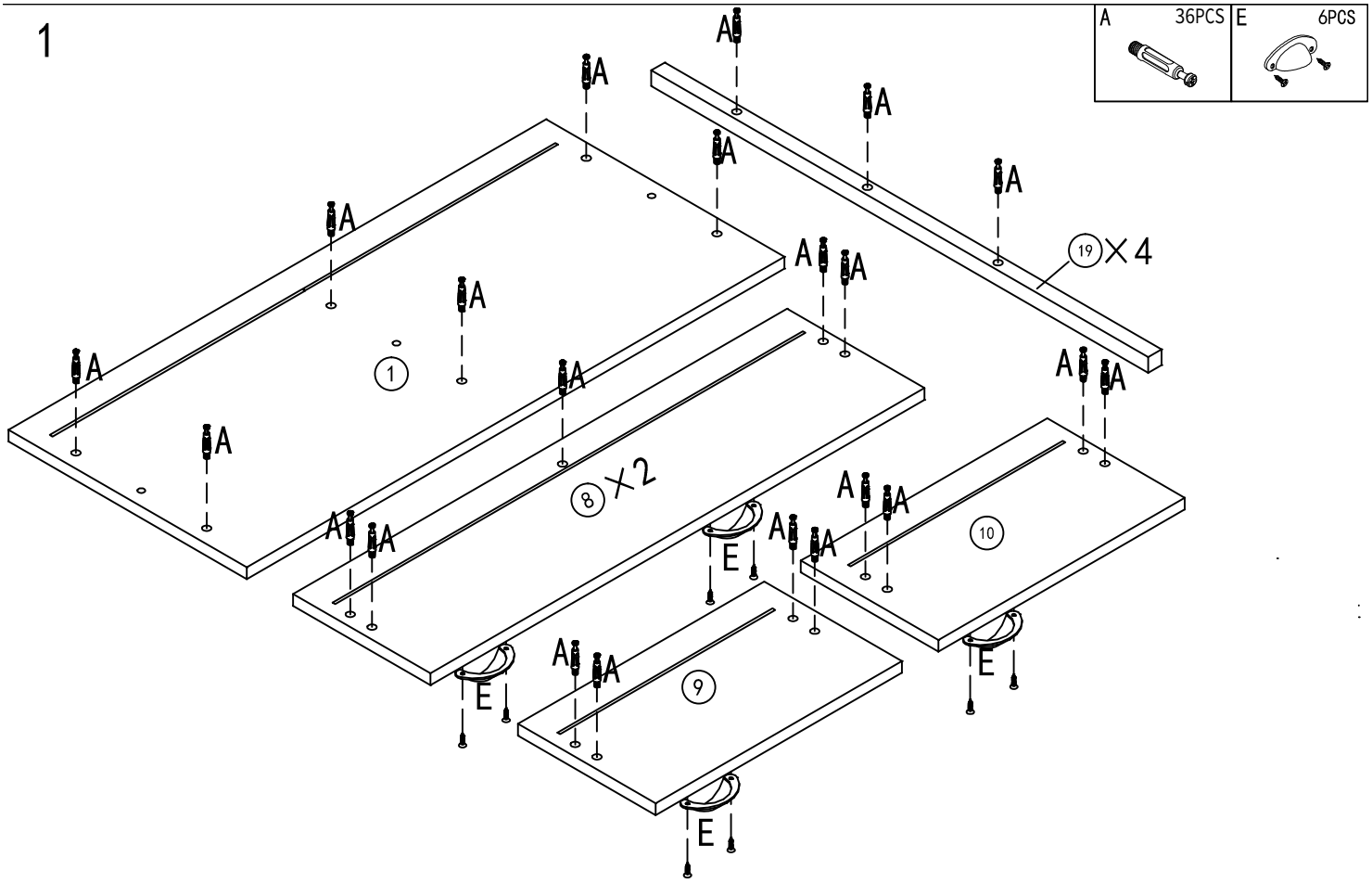
A 36PCS
E 6PCS
19 ×4
8 ×2
1
10
9
A
E

2

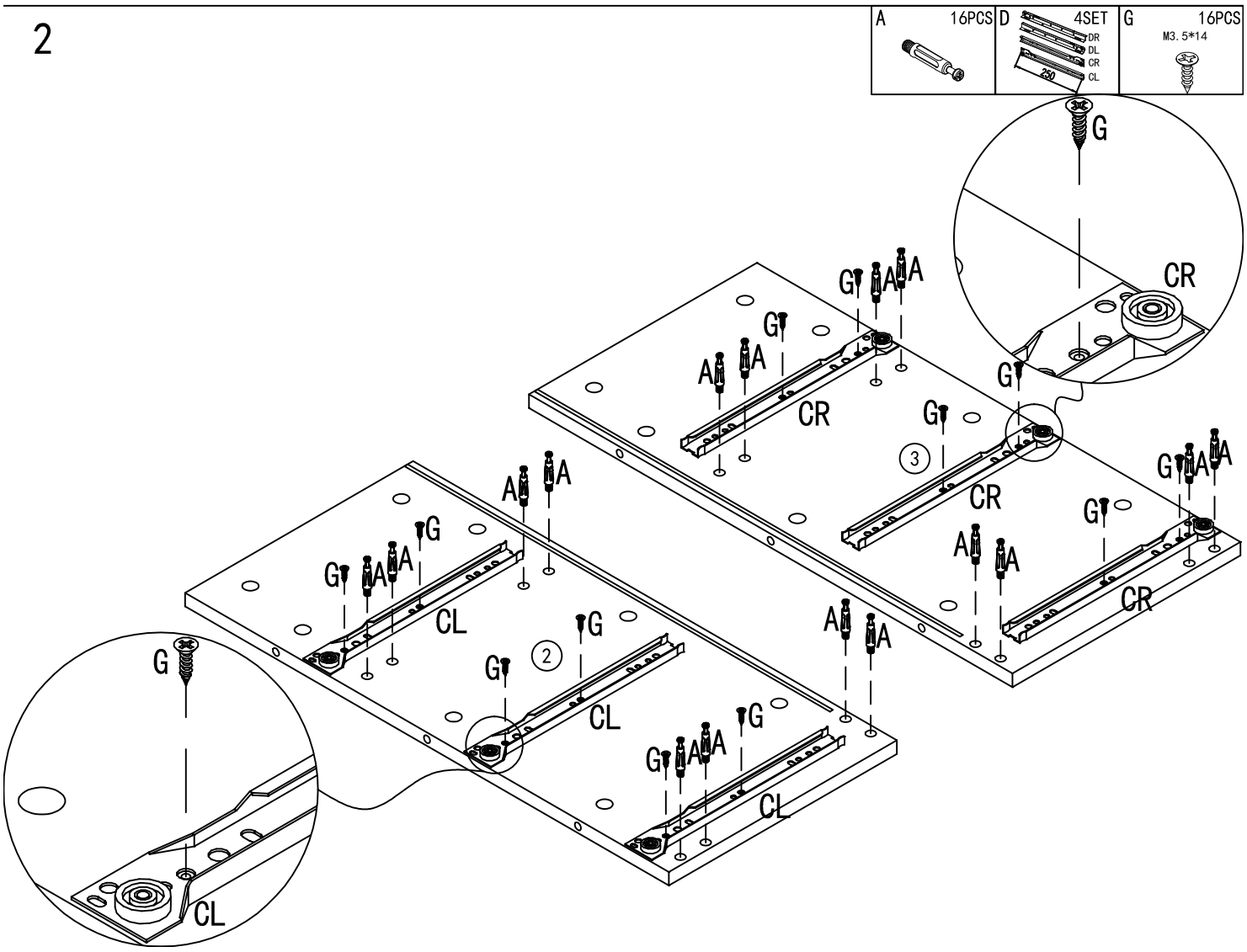
A 16PCS
D 4SET
DR
DL
CR
CL
250
G 16PCS
M3.5*14
G
CR
CL
2
3
A

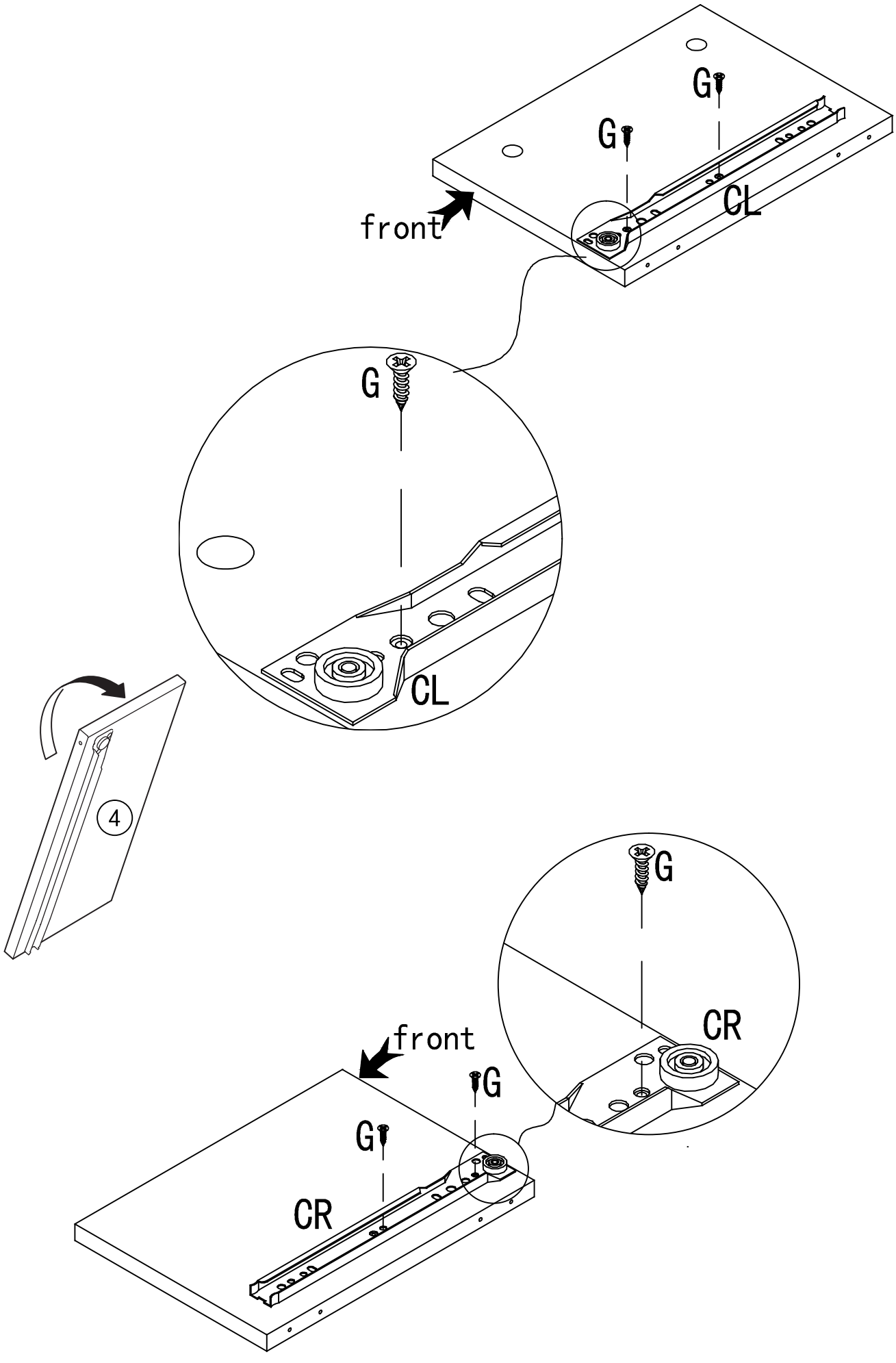
G
G
CL
front
G
CL
4
G
CR
front
G
G
CR

3

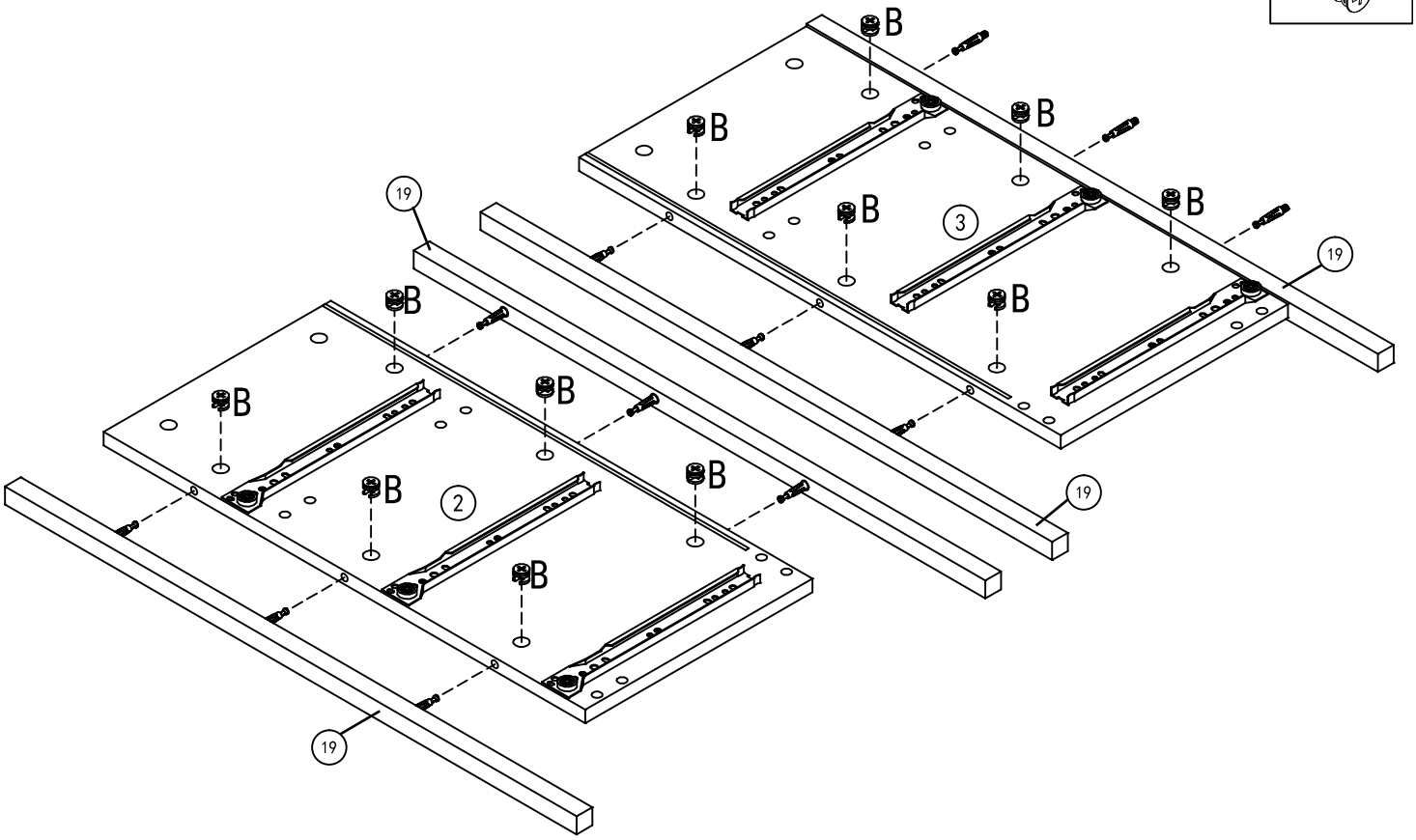

4

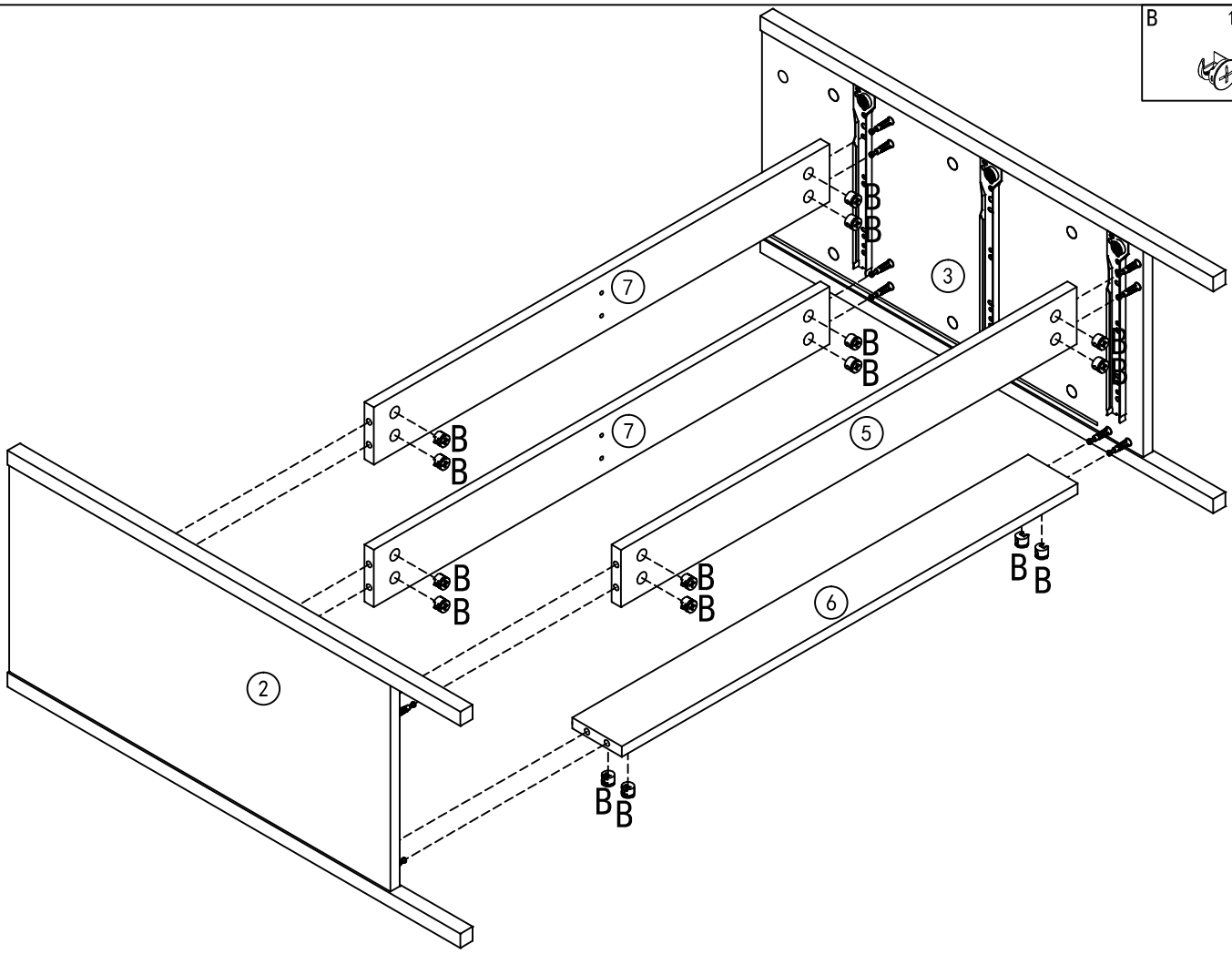

5

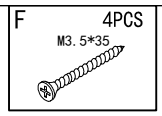
F
4PCS
M3.5*35

4
F
F
F
F

6

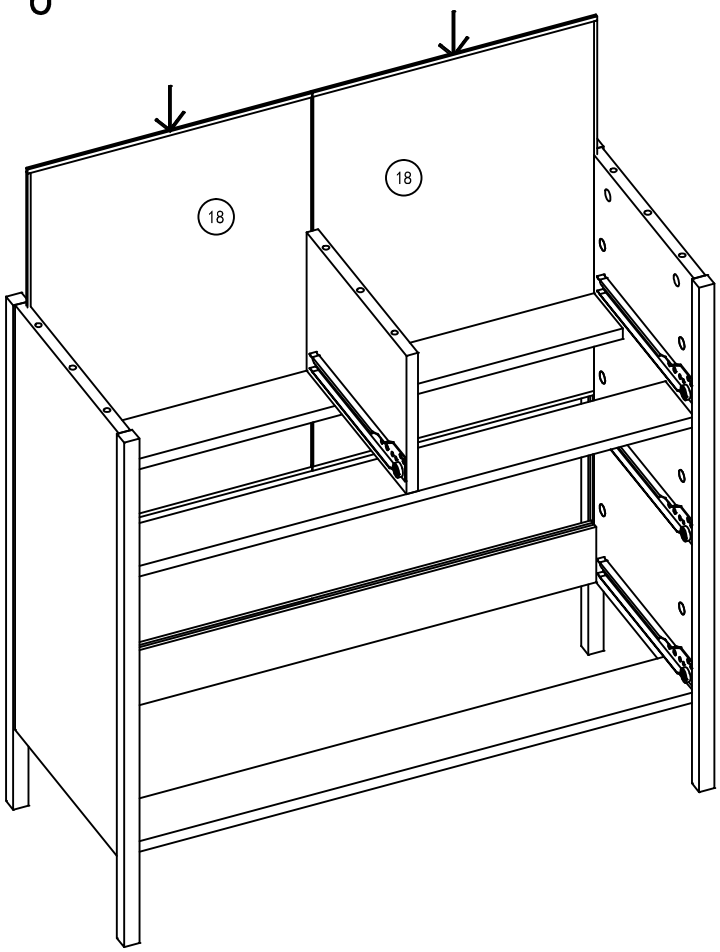
18
18

7

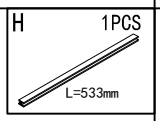
H
1PCS
L=533mm

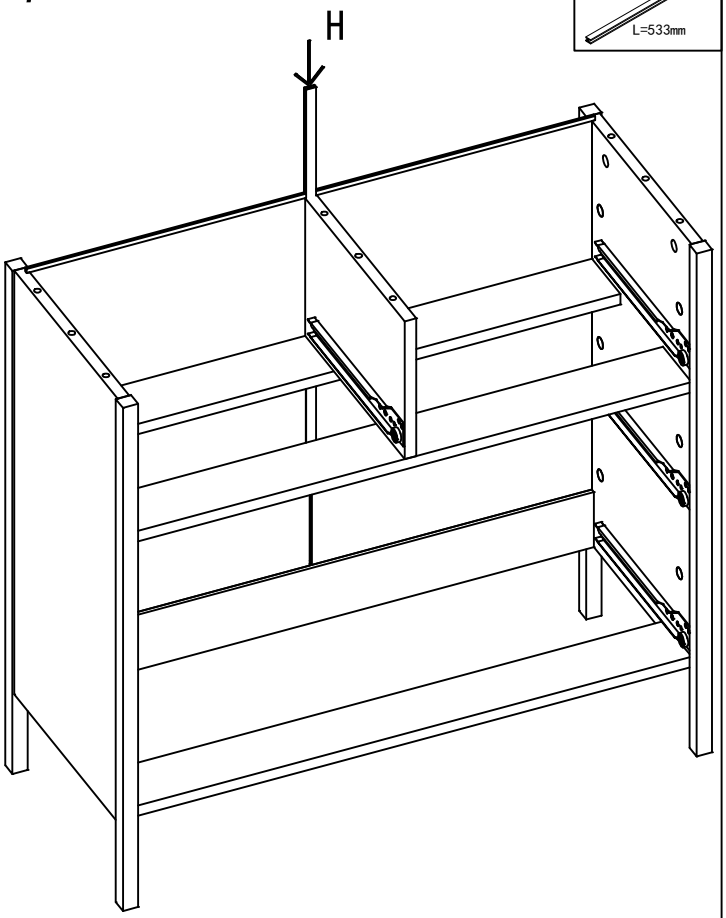
H

8

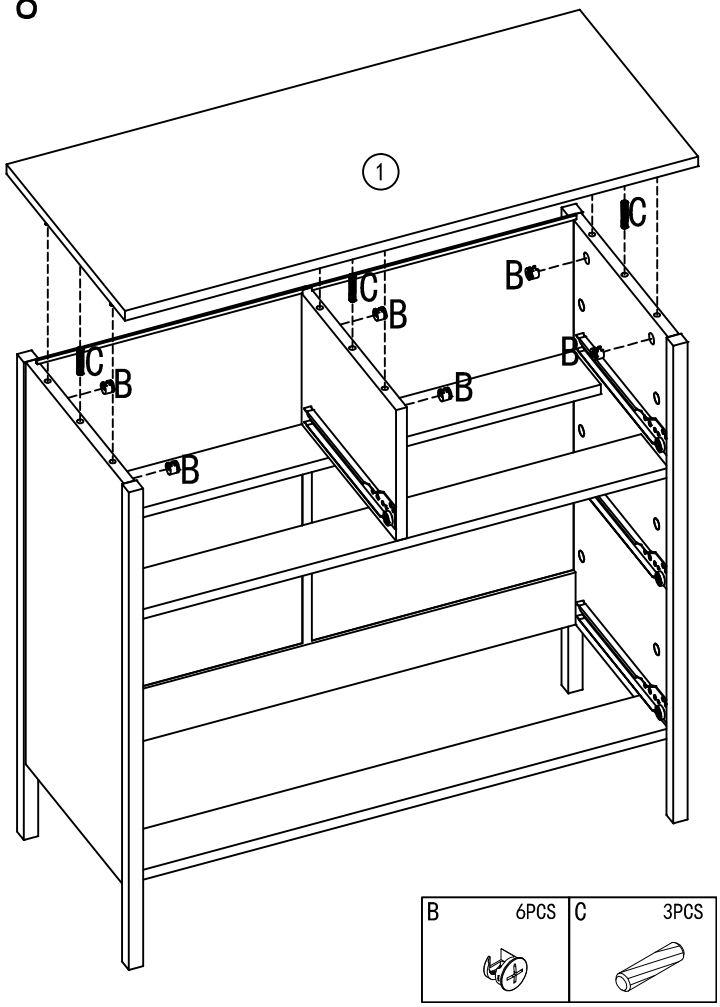
1
C
B
C
B
B
C
B
B
B

B
6PCS
C
3PCS

9

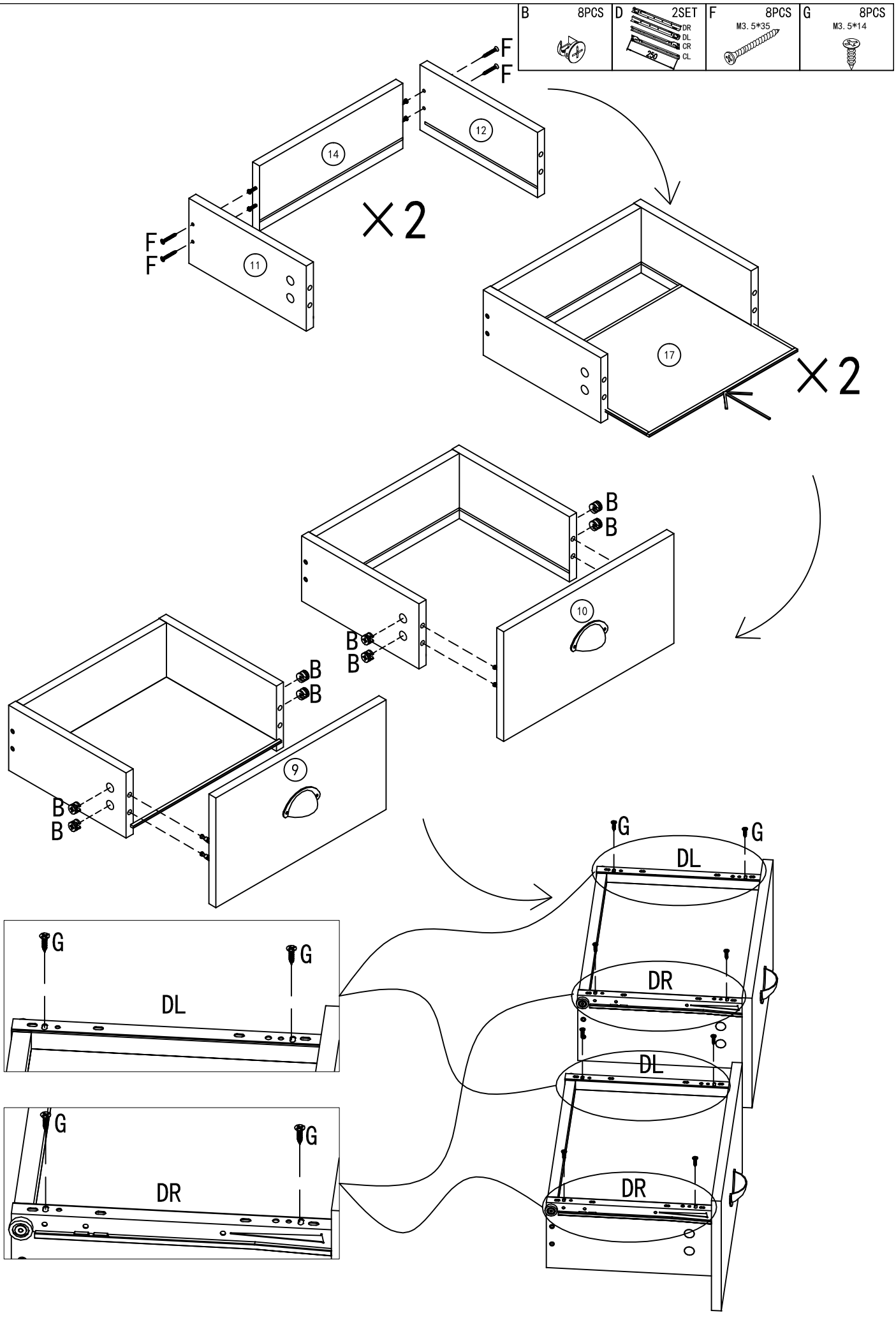
B 8PCS
D 2SET
DR
DL
CR
CL
F 8PCS
M3.5*35
G 8PCS
M3.5*14
F
F
12
14
×2
F
F
11
17
×2
B
B
10
B
B
B
B
9
G
G
DL
G
G
DL
DR
DL
G
G
DR
DR

10

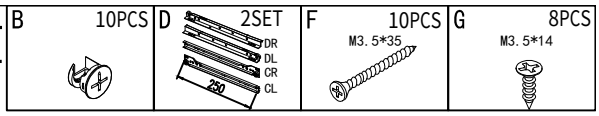
B 10PCS
D 2SET
DR
DL
CR
CL
250
F 10PCS
M3.5*35
G 8PCS
M3.5*14

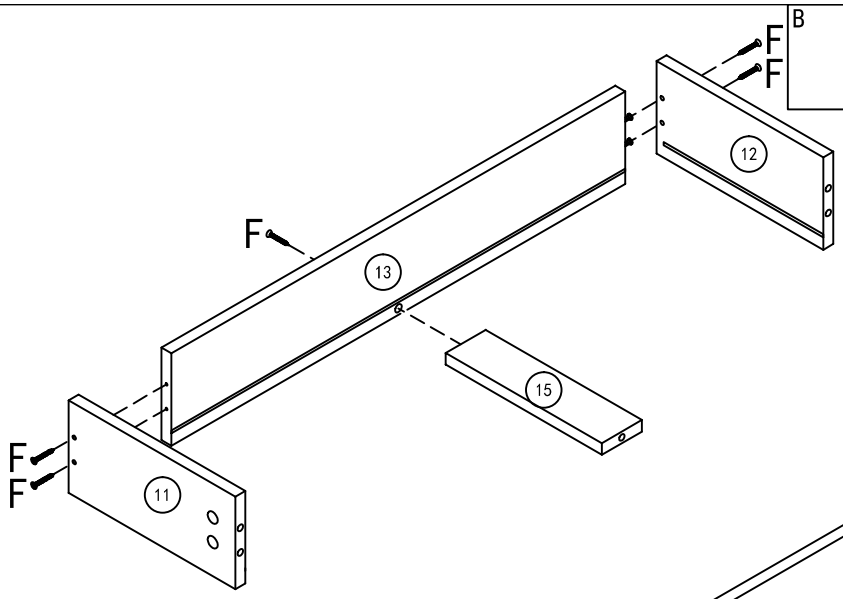
F
F
12
F
13
15
F
F
11

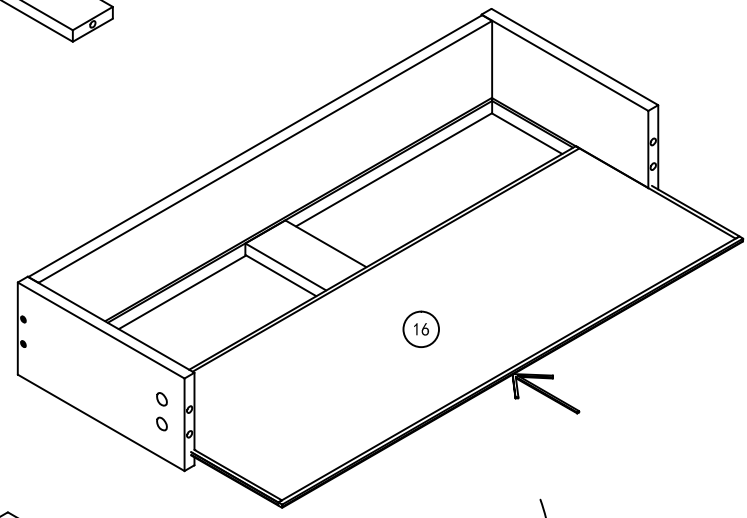
16

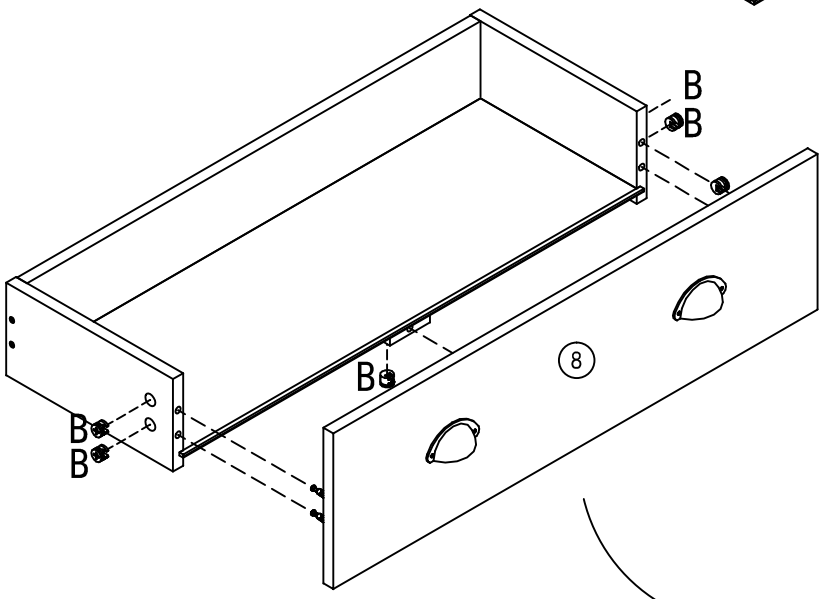
B
B
B
B
B
8

X2

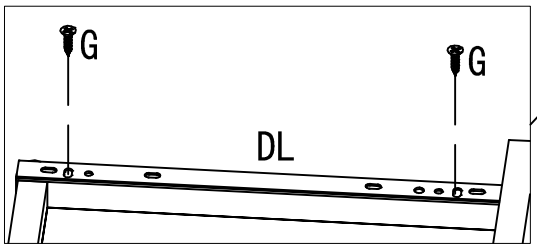
G
G
DL

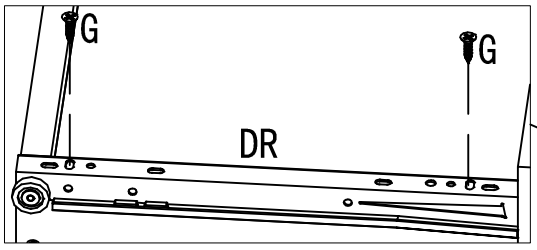
G
G
DR

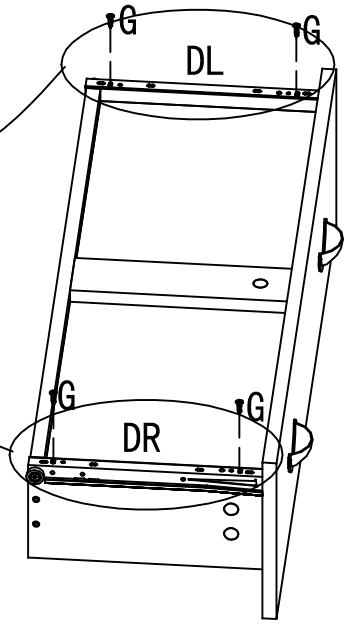
G
G
DL
G
G
DR

11

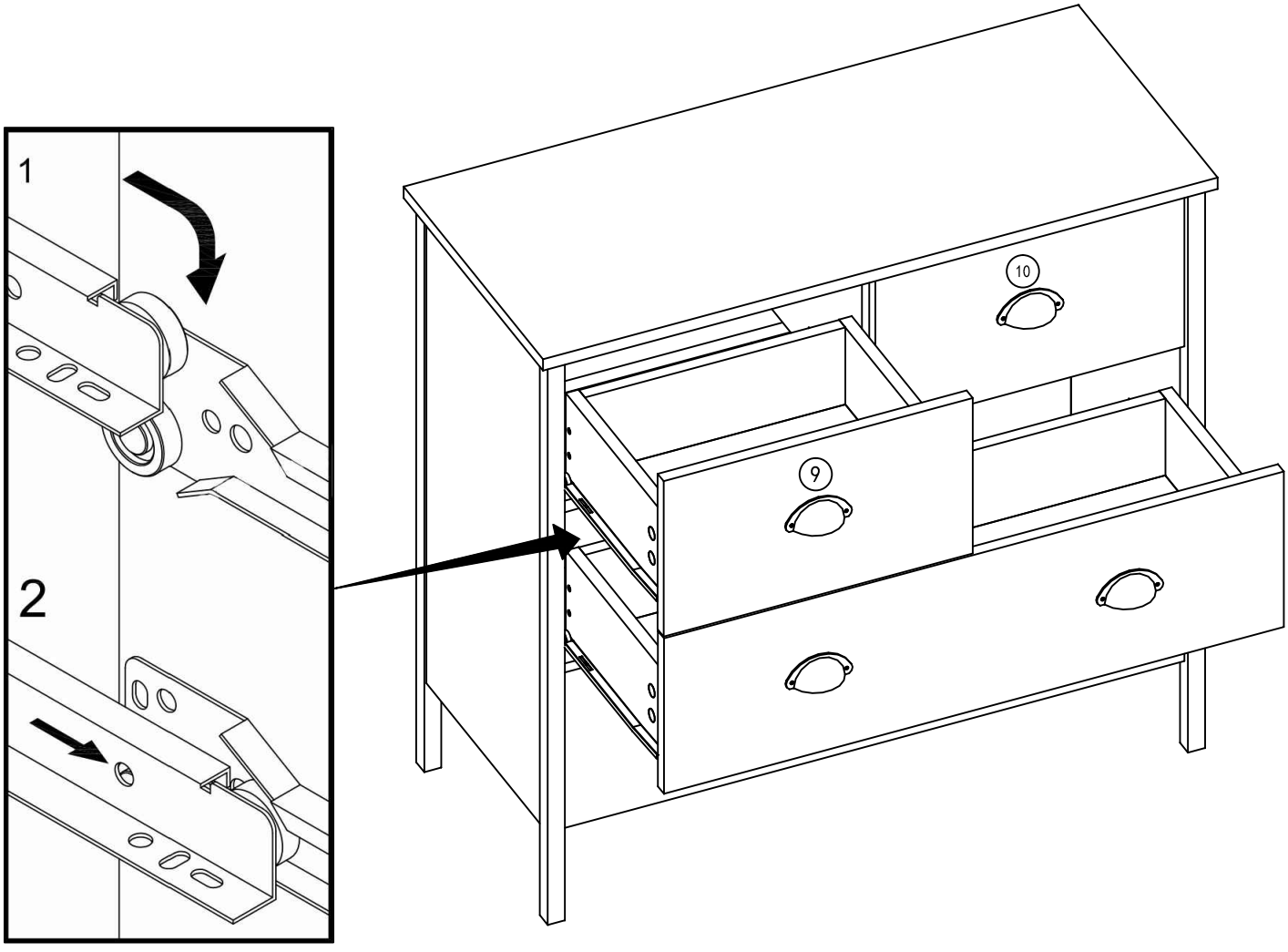

12

J 10PCS

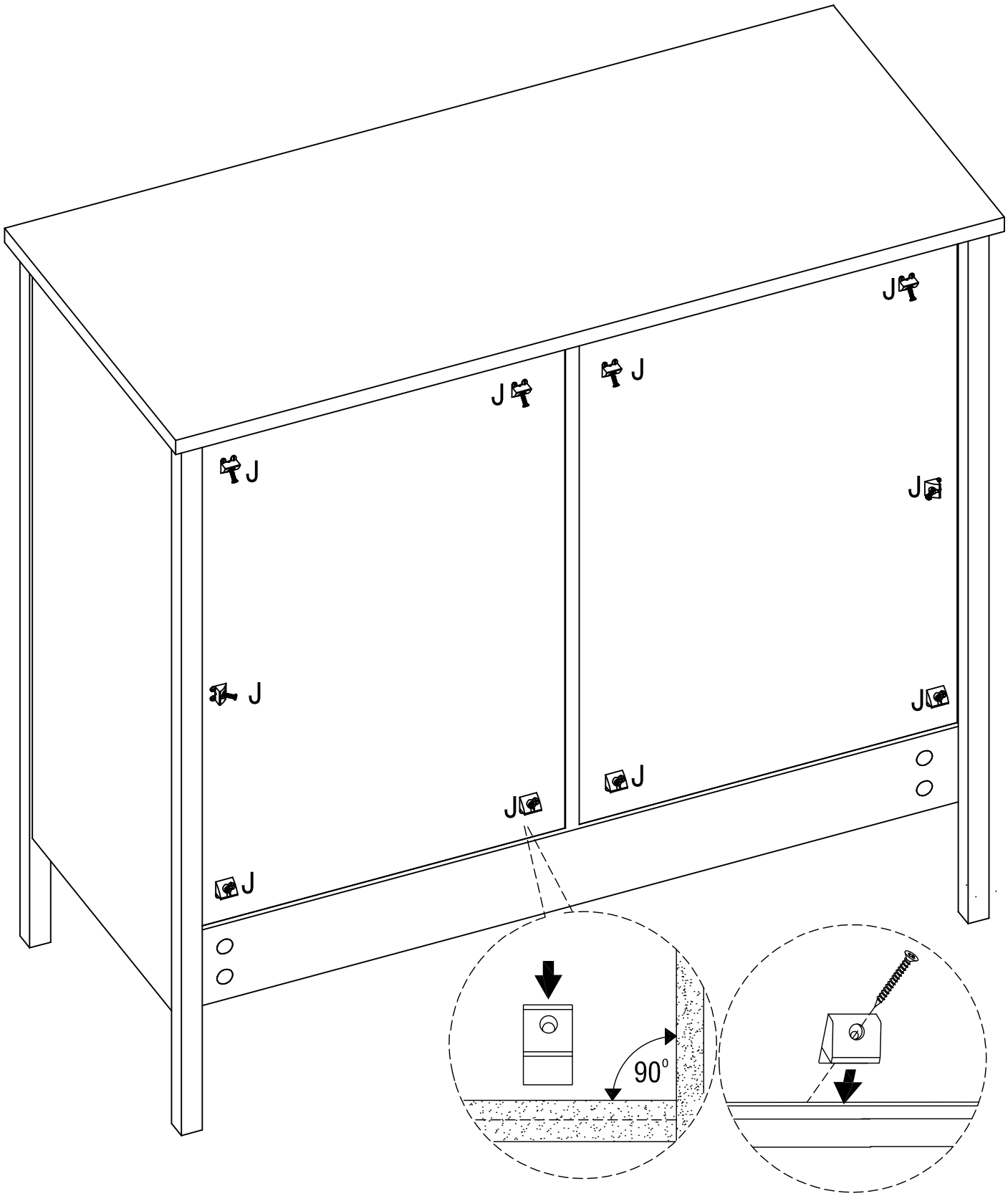

13

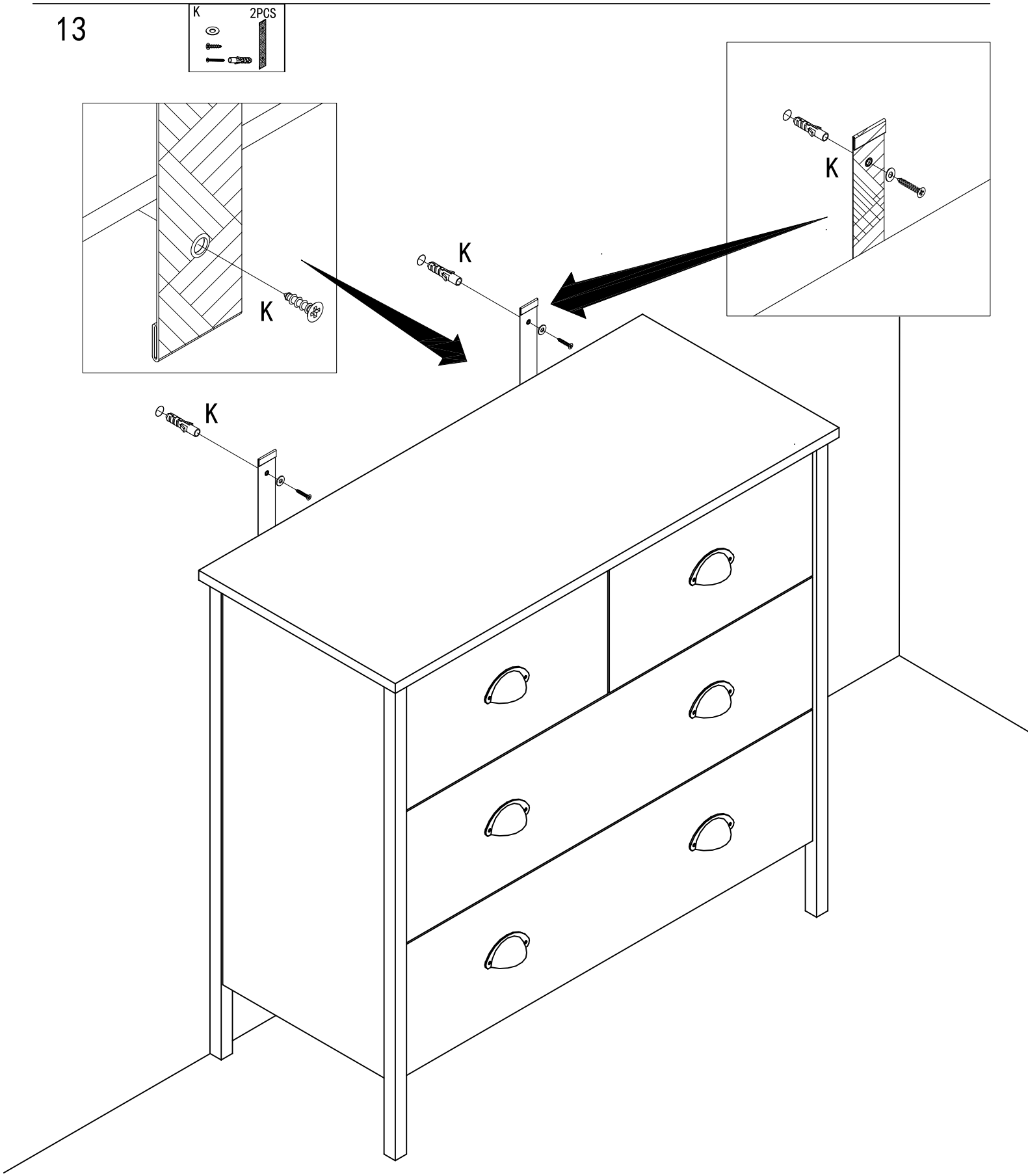

Return:

Please keep your original packages,due to the health and safety reasons,we can not accept returns without original packages.

Comments and Suggestions:

Please give us your advice about this purchase and send to this e-mail：help@furniturehmd.co.uk

Need Two Or More People To Complete

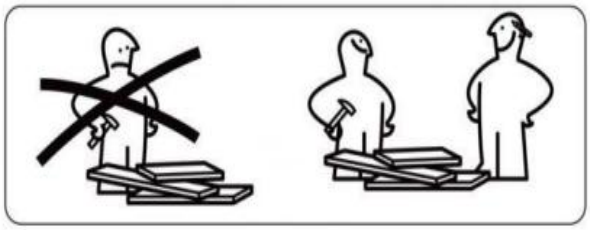

Assemble Item On a Clean Flat Surface

