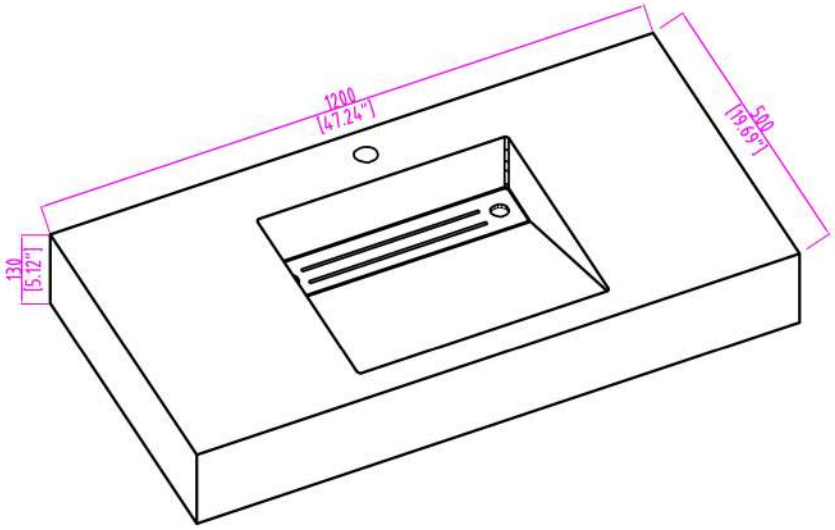
1200
[47.24"]
500
[19.69"]
130
[5.12"]

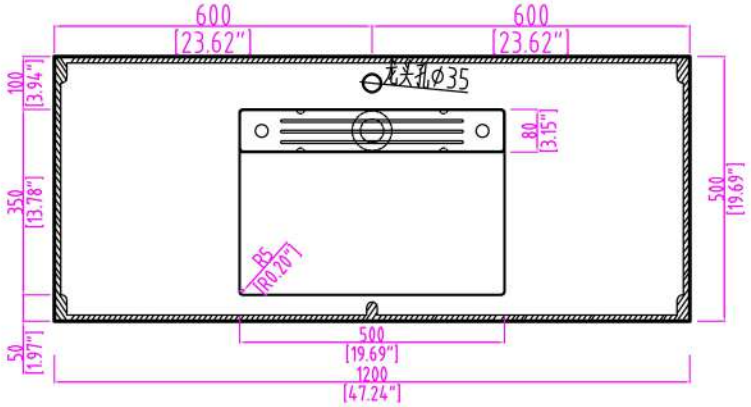
600
[23.62"]
600
[23.62"]
龙头孔Ø35
100
[3.94"]
80
[3.15"]
350
[13.78"]
500
[19.69"]
R5
[R0.20"]
50
[1.97"]
500
[19.69"]
1200
[47.24"]

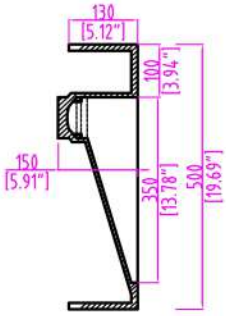
130
[5.12"]
100
[3.94"]
150
[5.91"]
350
[13.78"]
500
[19.69"]

FELIX-1648