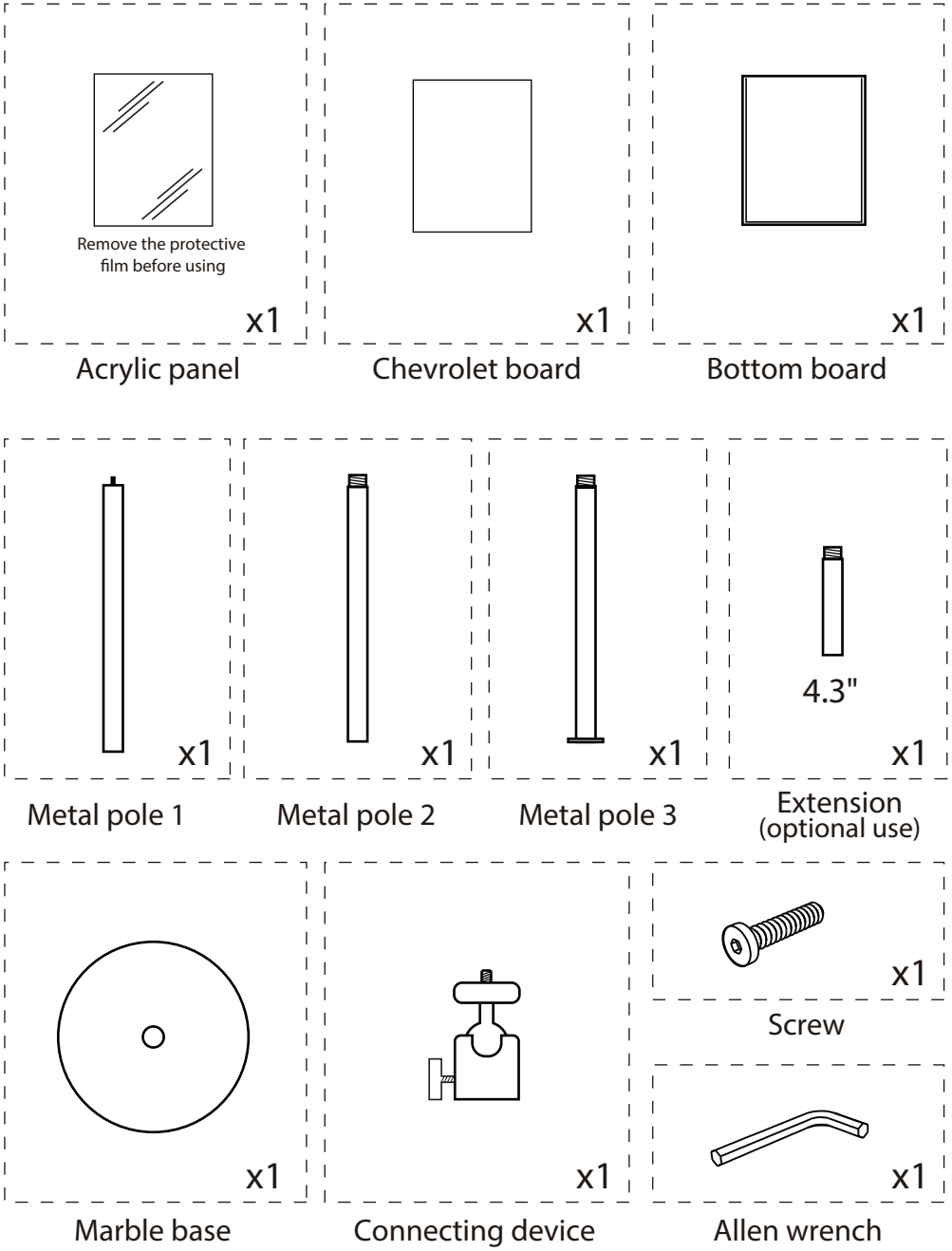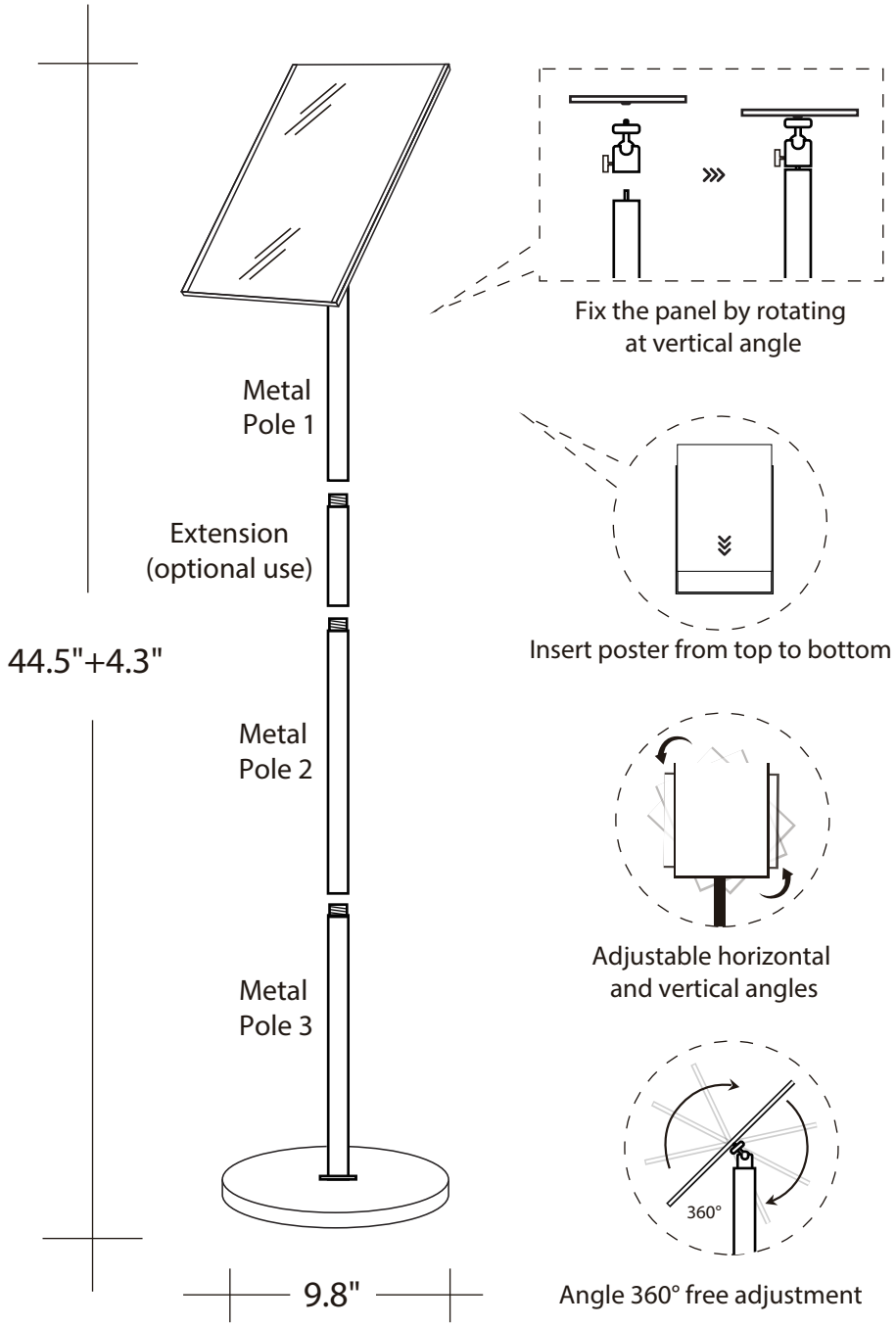Sign Holder Accessory Diagram And Installation Instructions