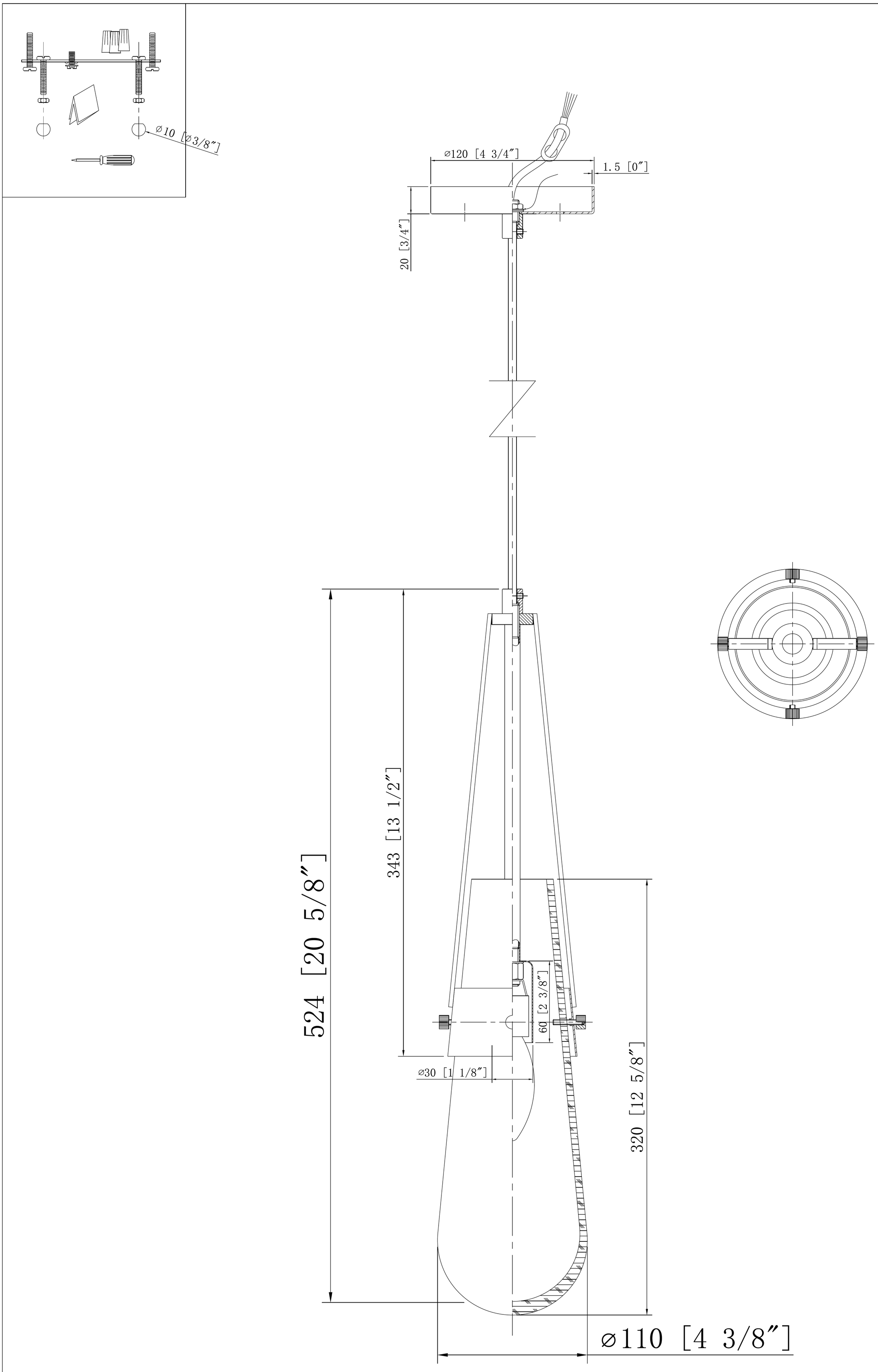
⌀10 [⌀3/8″]
⌀120 [4 3/4″]
1.5 [0″]
20 [3/4″]
524 [20 5/8″]
343 [13 1/2″]
60 [2 3/8″]
⌀30 [1 1/8″]
320 [12 5/8″]
⌀110 [4 3/8″]

ITEM: