HOMACER

Standard Single Door & Double Door Hardware

Installation Manual

SAFETY PRECAUTIONS

⚠ WARNING!

- Power tools can cause serious damage if not professionally used. Safety gear must be worn before installation to prevent unexpected injuries.
- Pick an area free of hazardous condition before you start on the project. Please use tools and power tools responsibly any loss of control and accident deaths may occur due to abuse of tools.
- Please make sure all hardware is secured on to the door is sufficiently tight. Doors with loose hardware may result in unexpected serious injuries. To avoid any problems, be sure hardware is secure before door is put on the track.
- All hardware provided is for safety reasons. Anti-Jump systems are to prevent doors from falling off the track while in use. Please follow each instruction carefully. Track must be installed on studs in order to keep the track and doors secure from serious problems. All safety hardware and instructions included in this project must be used and followed specifically to prevent any unforeseen serious problems.

!CAUTION!

- Big objects required in this project are needed to be carefully and responsibily moved. Be sure to wear safety gloves and shoes to prevent any serious injury.
- Be extremely careful to not put any parts of your body against a moving part of the hardware. This may cause bruising, punctures, and other results of injuries when for example when fingers are caught in the closing area of the doors.
- Precautions should be taken when opening or closing the door(s). Handles should be used when attempting to slide the door(s). Always keep you and children aware and safe from any unexpected situations.
- Any extreme uncontrolled pressure opening or closing the door(s) can damage the hardware gradually. Use handle(s) to open and close the door(s) with care at all times.

HARDWARE INCLUDED

Different track length comes with different hardware quantity.
Please be sure to check the hardware you should have before installation.

Hanger/Roller Box contains:

Steel Hanger/Roller (2) | Hex Bolt (4), Acorn Nut (4), Washer (8) | Anti-Jump Pad (2), Floor Guide (1) | Door Stopper (2), Hex Wrench (1)

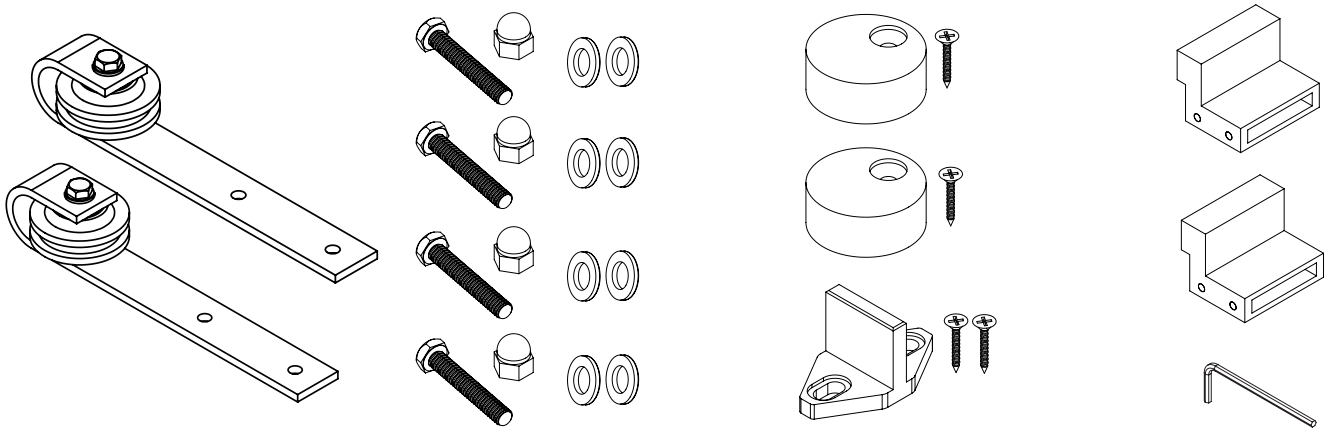

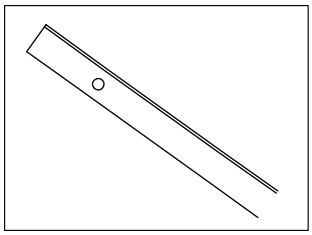

Flat Track

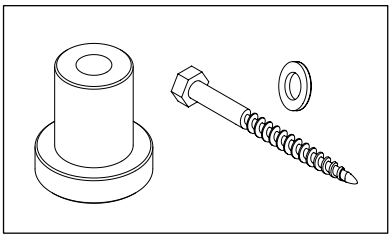

Spacer, Lag Bolt, and Washer Set

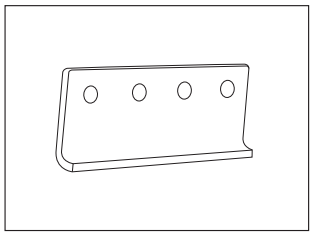

Junction Plate

HARDWARE CHECKLIST

Track Measurement	Hanger/Roller Box for Single Door Kit	Hanger/Roller Box for Double Door Kit	Flat Track	Spacer, Lag Bolt, and Washer Set	Junction Plate
4FT	1	2	1	3	0
4.5FT	1	2	1	3	0
5FT	1	2	1	4	0
5.5FT	1	2	1	4	0
6FT	1	2	1	5	0
6.6FT	1	2	1	5	0
7FT	1	2	1	5	0
7.5FT	1	2	1	6	0
8FT	1	2	1	6	0
9FT	1	2	2	6	1
10FT	1	2	2	8	1
11FT	1	2	2	8	1
12FT	1	2	2	10	1
13FT	1	2	2	10	1
14FT	1	2	2	10	1
15FT	1	2	2	12	1
16FT	1	2	2	12	1
18FT	1	2	2	15	1
20FT	1	2	2	15	1

TYPE OF HANGERS

Please follow the measurement stated below, measuring from the top of the door to the center of the first hole.

Classic

Straight

Arrow

Black Wheel

Star

Gear

Flame

Mustache

Imperial

Bucks

Twig

Royal

Anchor

Diamond

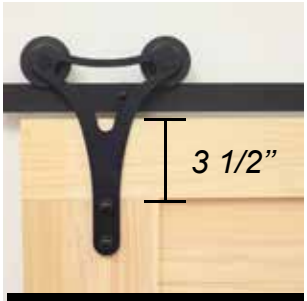

Horns

Shuriken

Horseshoe

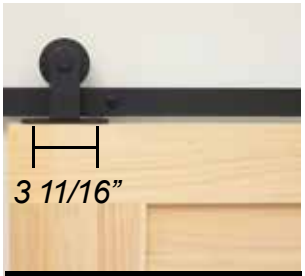

T-shape

INSTRUCTIONS

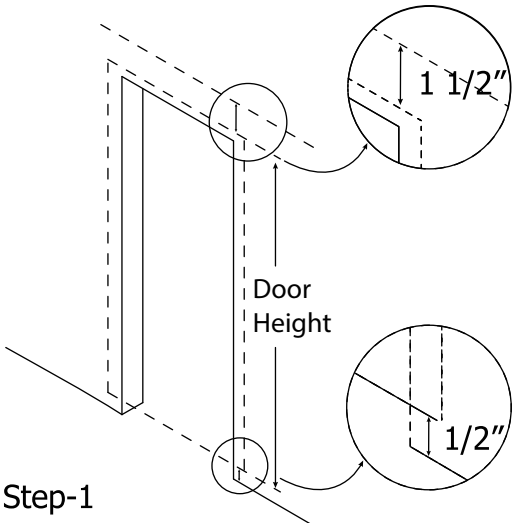

Step-1

Draw a horizontal line using the following formula (1/2" + Door Height + 1 1/2"). This line will be used to line up horizontally to the center of the track.

REMINDER: Make sure your floor is level. If not, please measure the distance from the highest point of your floor.

This procedure should be done so that when the doors go on the track it will slide smoothly above that highest point of the floor.

If your track comes in 2pcs or more, install the junction plate on to each two tracks like the diagram shown here.

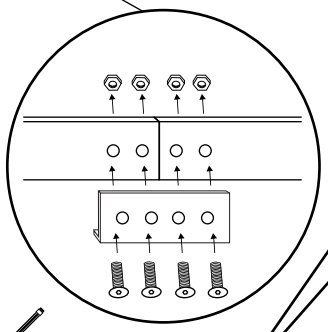

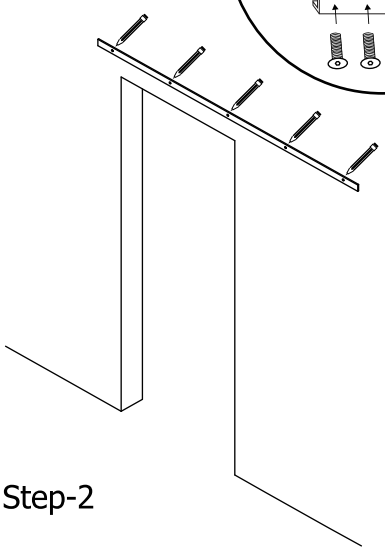

Step-2

Find all the studs and then lay your track onto the wall. Make sure the line you drew previously lines up horizontally to the center of the track and each hole is on the studs location. Then mark the center of the holes position.

REMINDER: Depth of track to wall is 1 3/8". If you have a door trim be sure to use a header that has the same thickness of your trim before installation of the track or a second option would be a 3/4" spacer extenders which we can offer when requested so the door can clear off the door trim when sliding. Also if your track cannot line up to the studs be sure to use a header board for safety purposes.

1. Drill the previously marked holes and install the lag bolt and spacer onto the first hole as shown in the picture.

2. Install the door stoppers on an approximate position where you want the doors to stop.

3. Repeat the same process for the remaining holes.

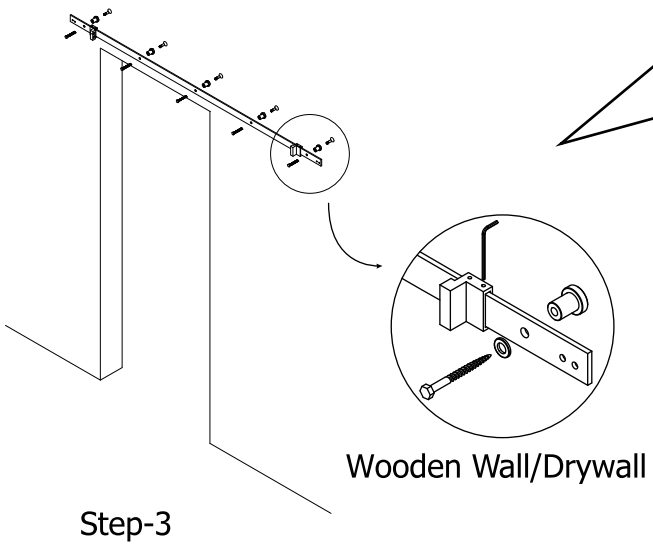

Step-3

CAUTION:Do not over tighten when installing the track on any drywall surfaces or you may be at risk of damaging your drywall.

Notice: The reason of installing the door stoppers before mounting the second hole is to avoid taking off the already installed bolts and spacers if you decide to install the stoppers between the two holes. The door stoppers position is adjustable between the two holes using the hex wrench.

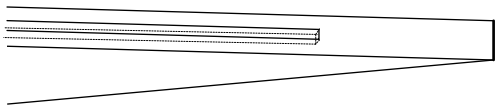

Open a slot that is 1/4” wide and 13/16” deep at the bottom of the door with a routher. This groove will be used with the floor guide.

Step- 4

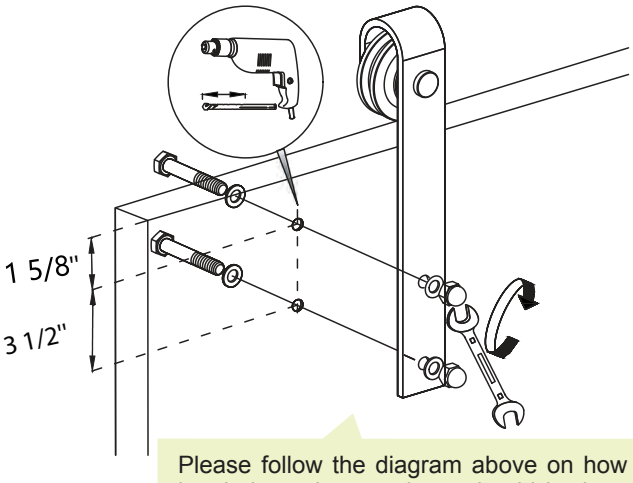

Drill the holes for the hanger according to the dimension given in the picture.The distance between the top edge of the door and the center of the upper hole is 1 5/8”. The distance between the side edge of the door and the hanger is up to your choice. It should be at least be a minimum of 1” away from the edge to prevent any damage to your doors. Next, install the hex bolts and acorn nuts as shown in the picture.

Notice: If you have other design hanger, please look up the dimension on Page 6.

Please follow the diagram above on how the hex bolt, washers and nut should be installed on the the door and hangers. Do not install them any other way since it may interfere with the function of the sliding system.

Step - 5

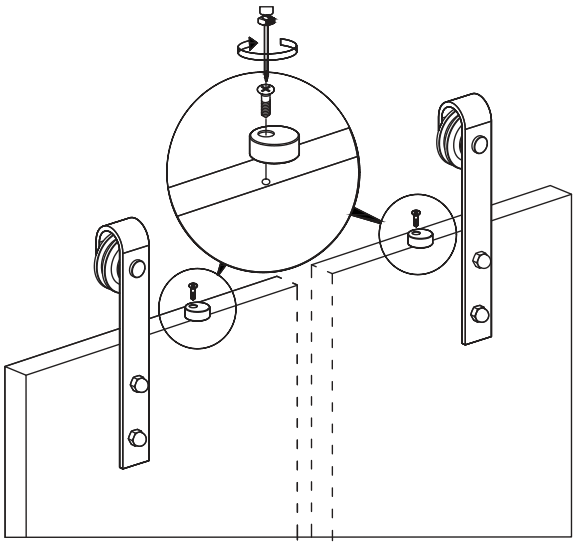

Install the anti-jump pads as shown in the picture.

Step - 6

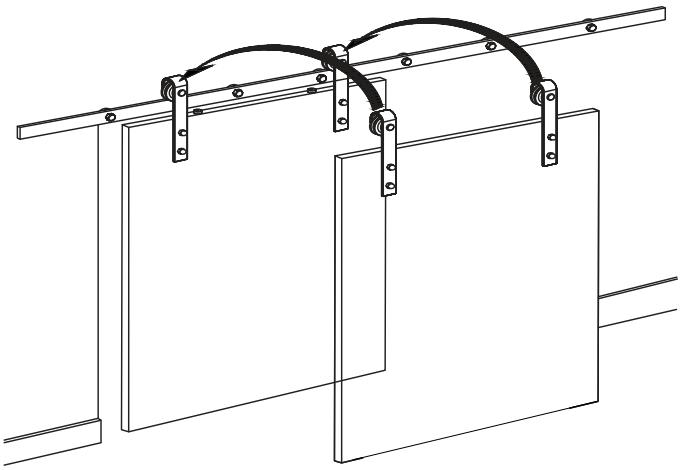

To mount your doors onto the track, you will have to lift your door at a slight angle and rest both wheel grooves onto the top of the track carefully.

Step - 7

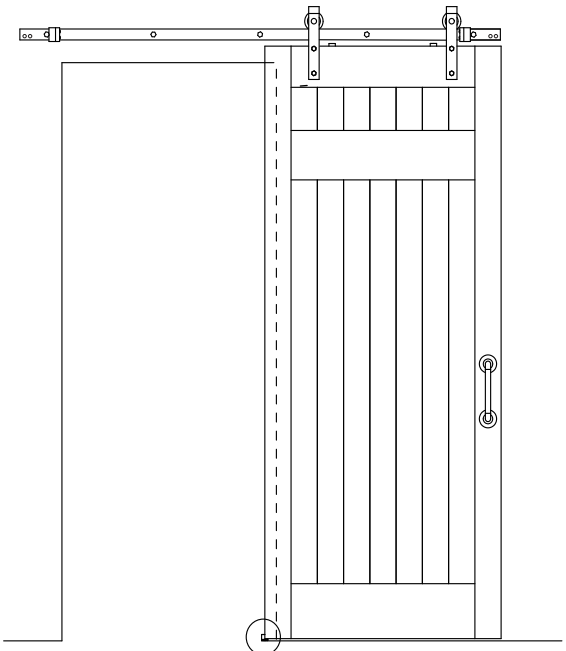

Usually floor guides are installed corner of the opening for standard single and double door hardware but we recommend to install the regular floor guide in your own location preference depending on how you want your inside door to slide. After the door is hung on to the track you will be able to locate where you want the floor guide to be installed according to your decision of sliding.

Notice: If you have two doors you can repeat from step 4 to step 8 again for the second door installation.

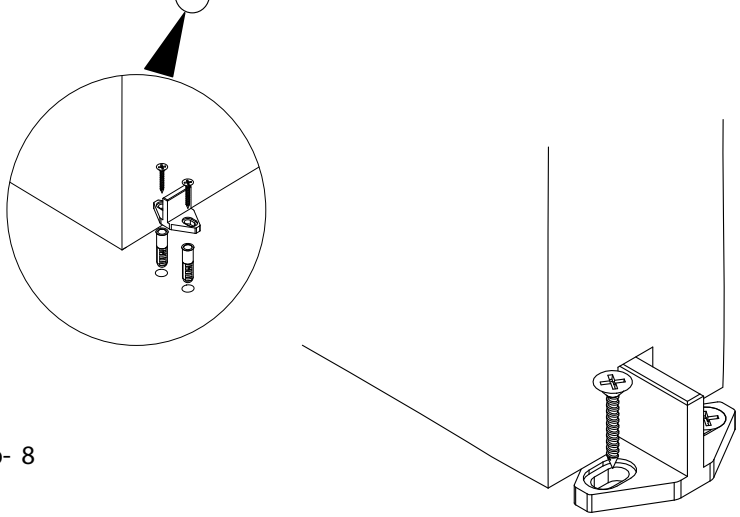

Step- 8

YOUR INSTALLATION IS COMPLETE!

SLIDING HARDWARE / BARN DOORS

High Quality • Exquisite Design • Outstanding Services

ABOUT US

At Homacer, our goal is to provide the finest sliding barn door hardware products and services for our valued customers. We keep polishing our products to make their quality better, prices lower and installation easier. We make it possible for you to get everything you need from us when you think about installing sliding barn doors.

CONTACT US

Office #: 1(770) 864-5437

Website: www.homacer.com

Email us: info@homacer.com

LOCATION

1885 Beaver Ridge Cir, Ste A
Norcross, GA 30071