PUSH ARM RECLINER

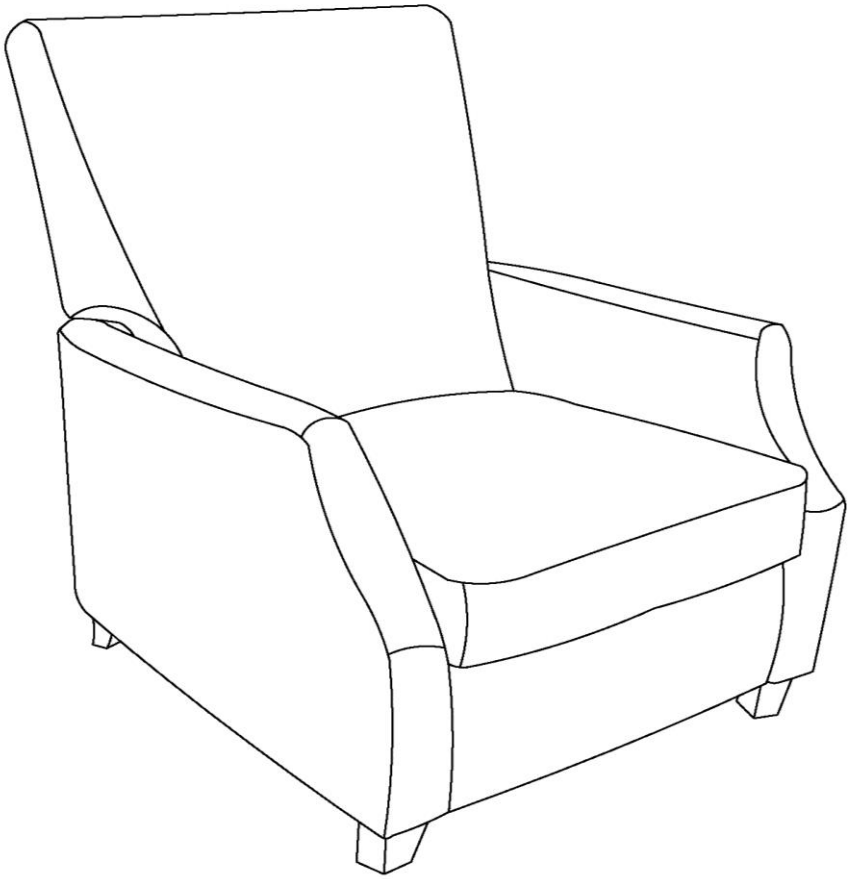

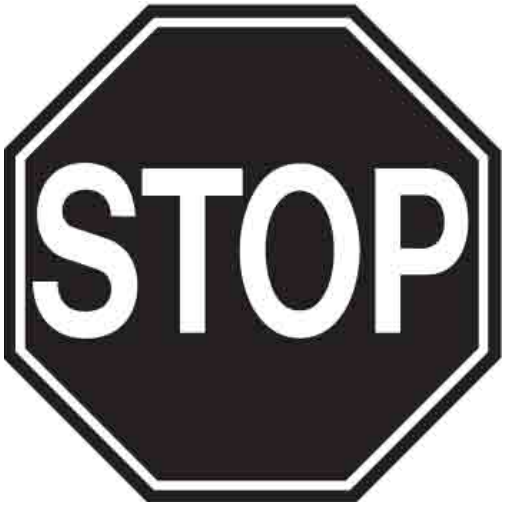

FOR REPLACEMENT PARTS OR HELP WITH ASSEMBLY PLEASE CONTACT US

PLEASE ENSURE TO HAVE THE MODEL #

FROM THE PACKAGING OR INSTRUCTION BOOKLET

TO RETURN THE PRODUCT:

PLEASE CONTACT THE RETAILER

WHERE THE ITEM WAS PURCHASED FROM

ENTER TO WIN

Upload an image of our furniture in your home with a short review to our facebook page for a chance to

Win up to $3000**!!!**

Like us on facebook

IMPORTANT: Please read this manual carefully before beginning assembly of this product. Keep this manual for future reference.

SAFETY INFORMATION

Identify all the parts and hardware. Do not discard of the packaging until you have checked that you have all of the parts and hardware required. Hardware package may have spare parts.

WARNING: This item contains small parts which can be swallowed by children and pets. Keep children and pets away during assembly. To avoid danger of suffocation, always keep plastic bags away from children and pets.
We recommend that you assemble this unit on a carpeted floor to avoid scratches. We do not recommend the use of power tools for assembly as this could damage the unit. Only use manual tools.

Requires 2 people for ease of assembly.

CARE and MAINTENANCE

Wipe regularly with clean water and a damp, clean, soft white cloth.
General cleaning can be done as needed with a mild detergent and water solution. Always rinse with clean water and dry.
For heavy soiling, dampen a soft white cloth or soft bristle brush. Use care as scrubbing can damage the surface.
More difficult stains can be treated, but this should be occasional, not daily, cleaning. ANY cleaning solution used must be removed with clean water and a clean white cloth. Cleaning residue left on the material can cause it to dry out and crack, or affect the color.
DO NOT use any cleaners with corrosive ingredients (lye, acids or ammonia).

PRE-ASSEMBLY INFORMATION

PARTS DESCRIPTION

1 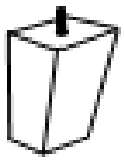 FRONT FEET QTY 2	2 BACK FEET QTY 2	3 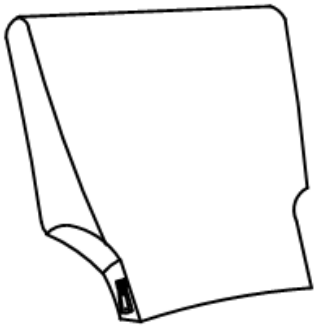 BACK QTY 1
4 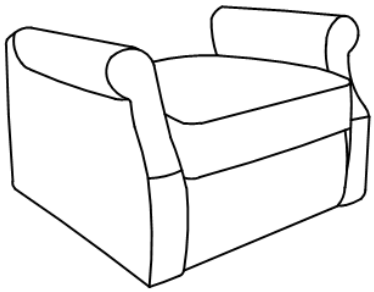 SEAT QTY 1	5 WASHER QTY 4	

NEED HELP? For help with assembly or if you are missing a part,
Please call customer service.

ASSEMBLY

STEP 1

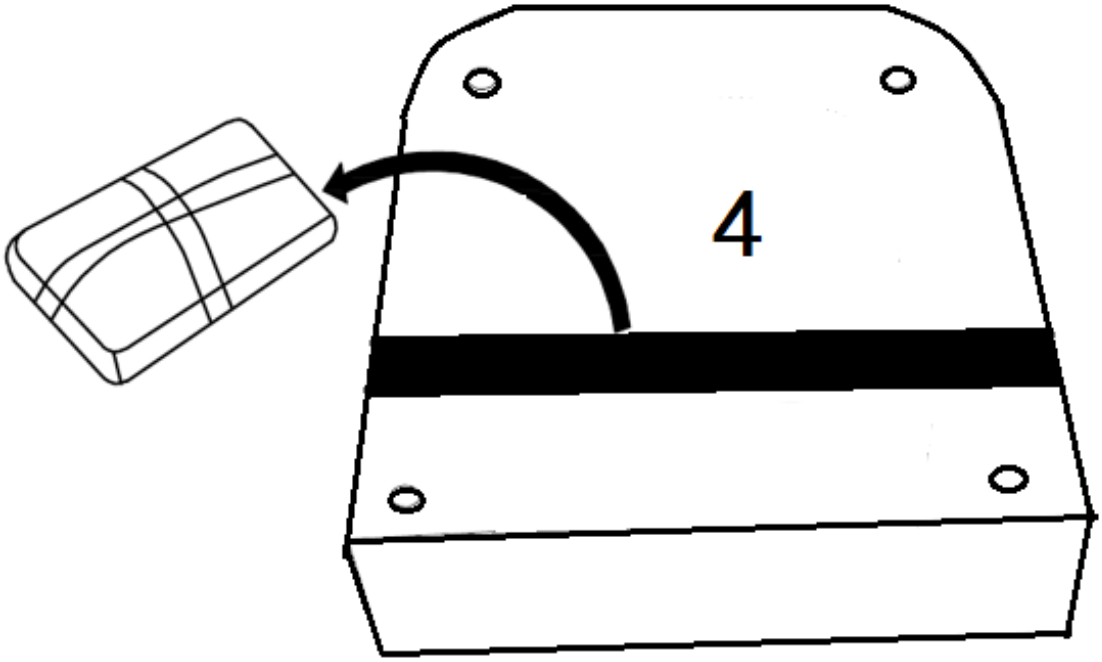

Place the Seat (4) on its back on a flat smooth surface. Remove the Feet (1) & (2) and Washers (5) from the bottom of the seat.

ASSEMBLY

STEP 2

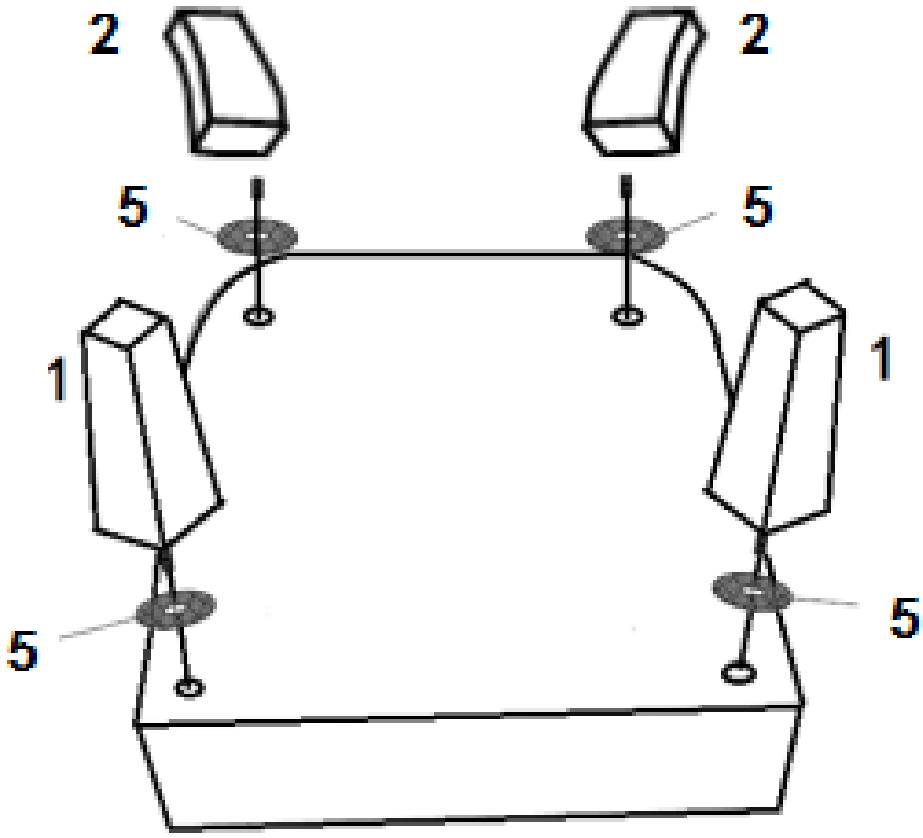

Attach the Front Feet (1) and Back Feet (2) with Washers (5).

ASSEMBLY

STEP 3

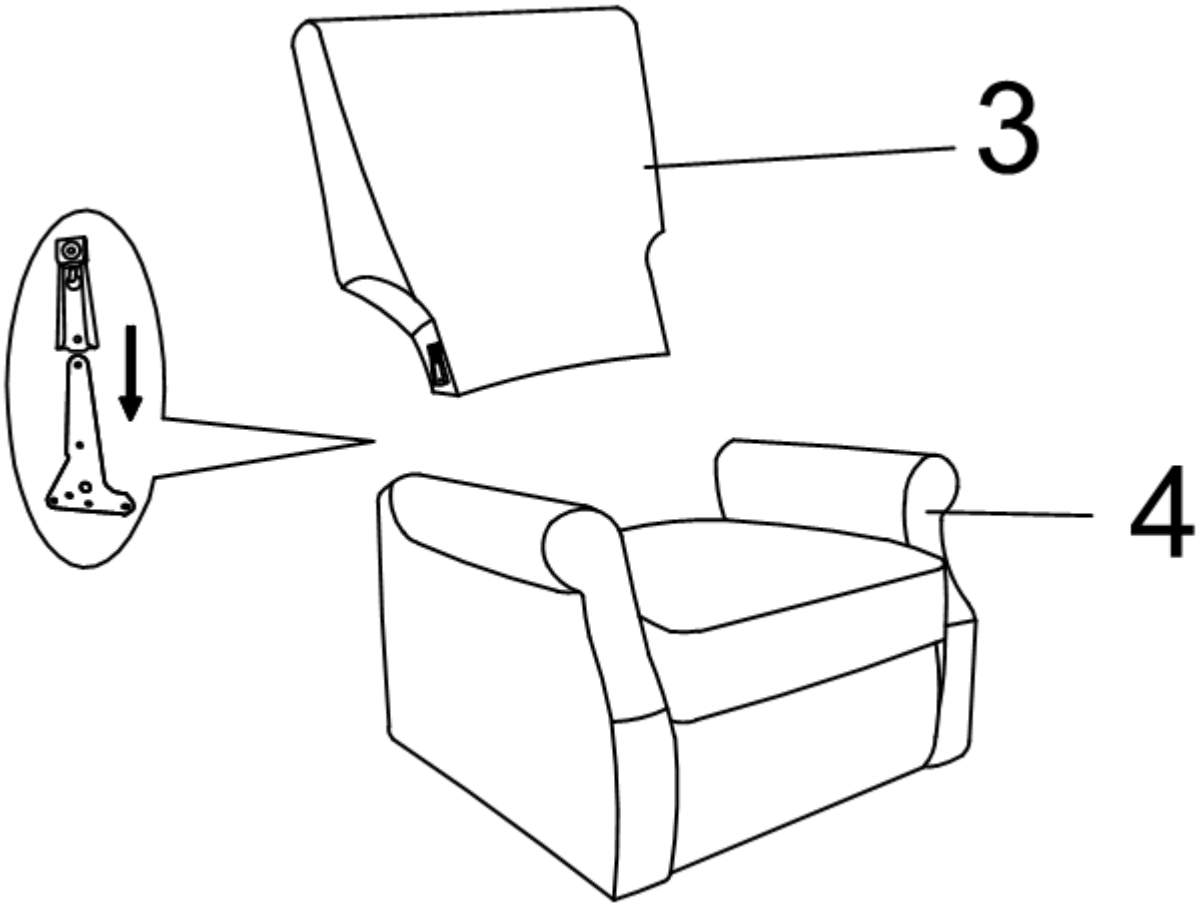

Slide the Back (3) into the slots on the Seat (4).

ASSEMBLY

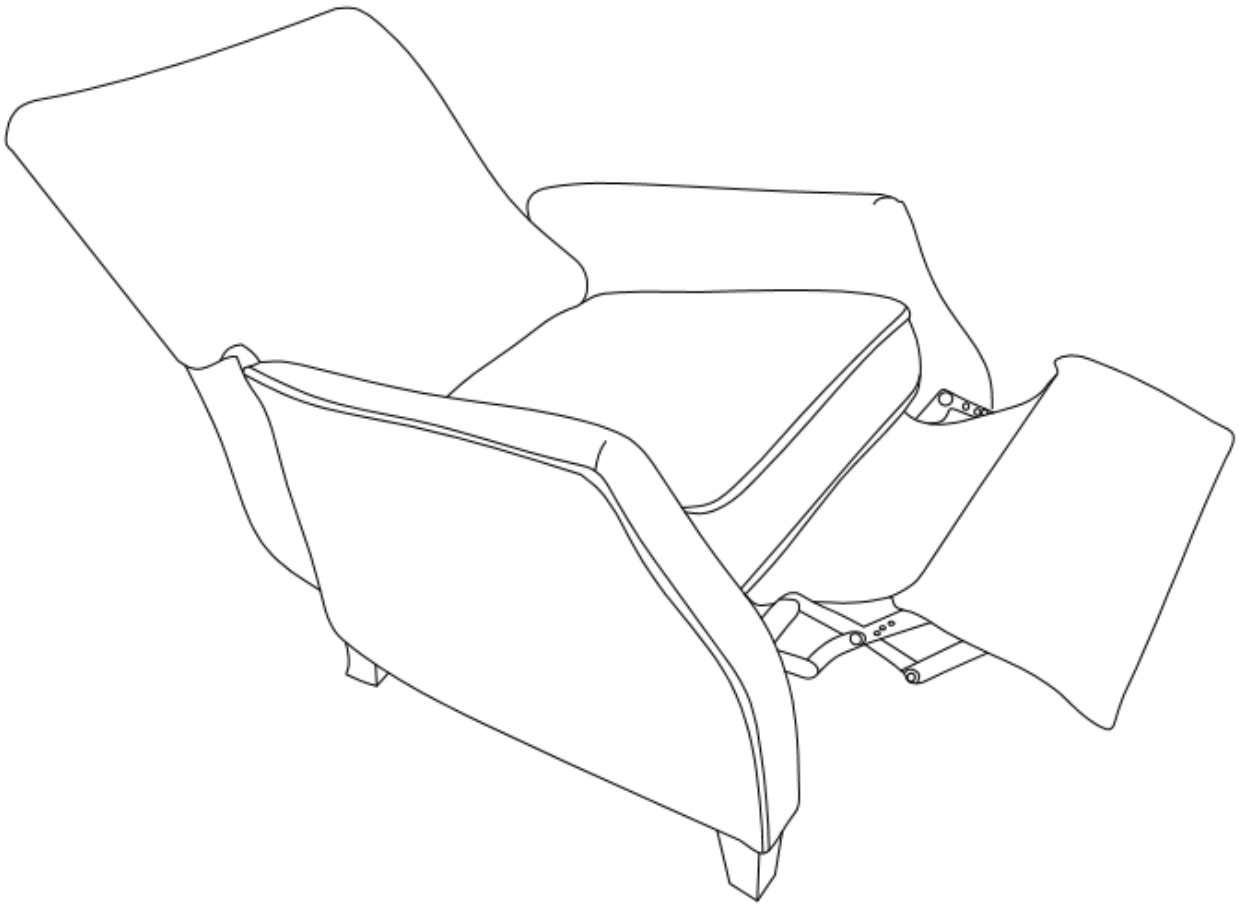

Keep the Recliner at least 12 inches away from the wall for proximity movement to recline fully.

To recline, place your arms on the armrests pressing your back against the recliner back.
The recliner can be returned to the upright position by moving forward and accompanying the footrest to the initial position by exerting pressure with your legs.

WARRANTY

Thank you for purchasing product. These products have been made to demanding, high-quality standards and are guaranteed for domestic use against manufacturing faults for a period of 12 months from the date of purchase. This warranty does not affect your statutory rights.

In case of any malfunction of your product (failure, missing parts, etc.) please contact us at our toll free service line or by email.

We reserve the right to repair or replace the defective product, at its discretion.

This product is guaranteed for 12 months if used for normal purposes. Any warranty is invalid if the product has been overloaded or subject to neglect, improper use or an attempted repair by other than an authorized agent. Heavy-duty or daily professional/commercial usage are not guaranteed.

Due to continuous product improvement, we reserve the right to change the product specifications without prior notice.

Question, problems, missing parts?

Before returning your product

please email Customer Support

or call Customer Support

For more information visit us on our website

Like us on facebook