Sidetable with Coat Rack

CTG052 | 40CM 3 Drawers

Assembly Instructions

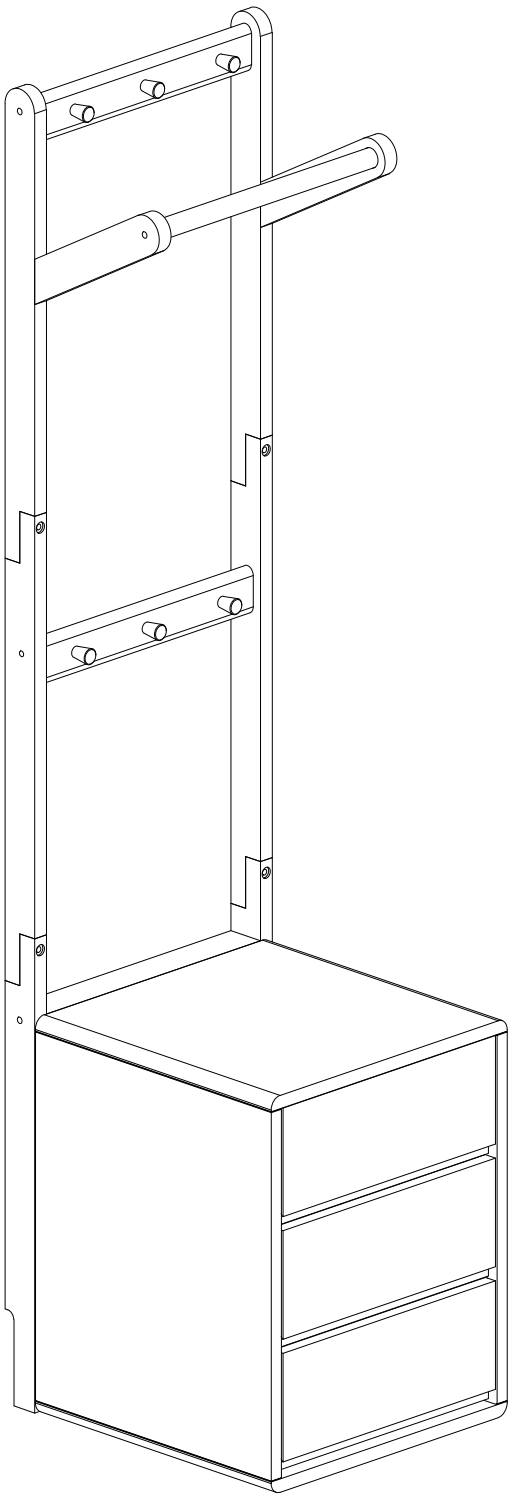

Assembly Diagram

CTG052 | 40CM 3 Drawers

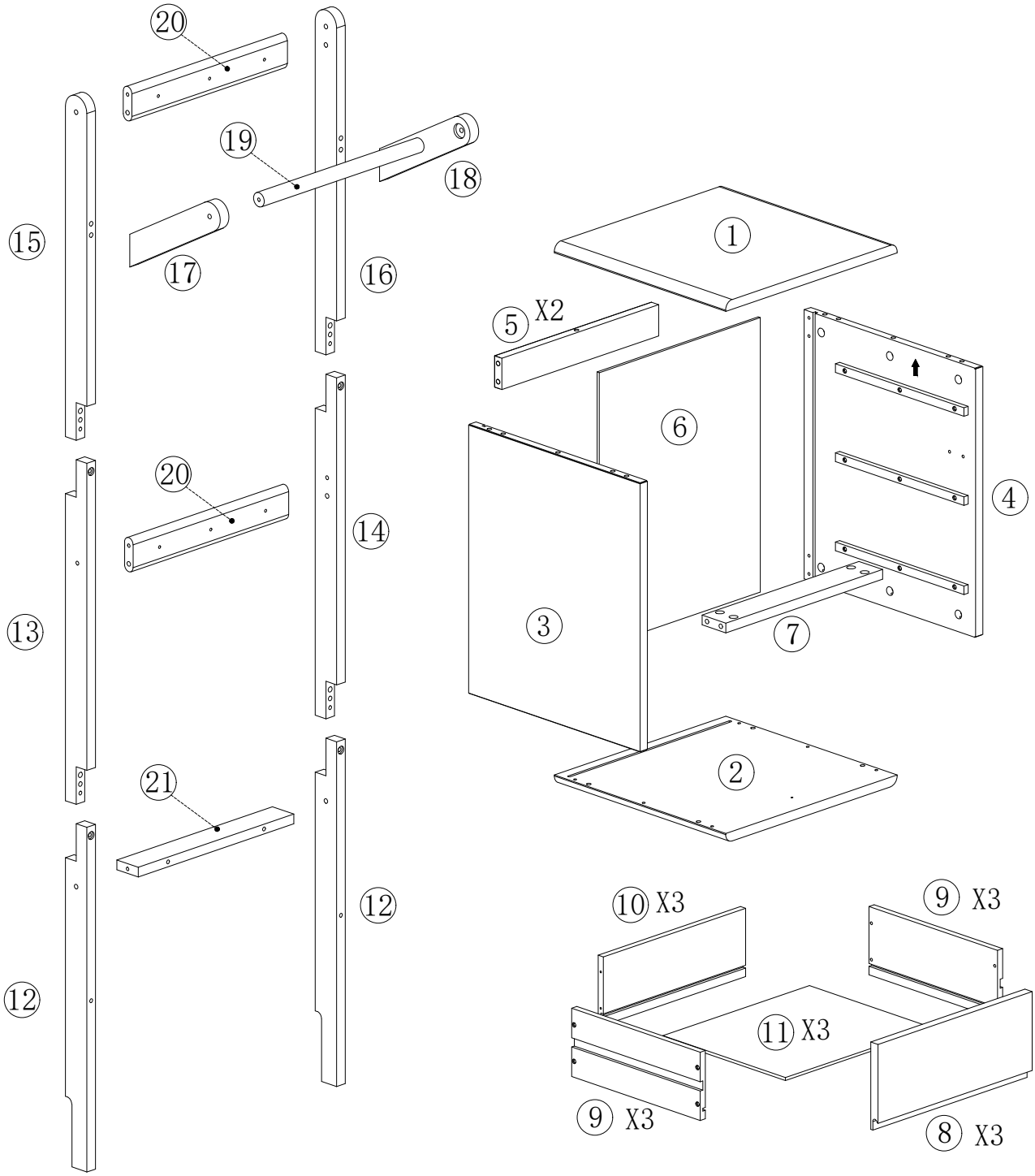

Parts List

CTG052 | 40CM 3 Drawers

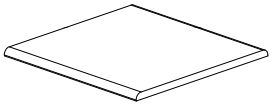

1 Top panel

400 × 400 × 17MM

Quantity: 1

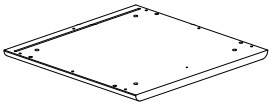

2 Base panel

400 × 400 × 17MM

Quantity: 1

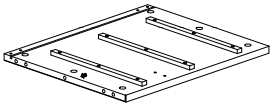

3 Left side panel

472.5 × 400 × 27MM

Quantity: 1

Slides preinstalled

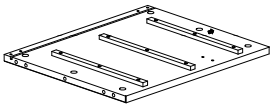

4 Right side panel

472.5 × 400 × 27MM

Quantity: 1

Slides preinstalled

Parts List

CTG052 | 40CM 3 Drawers

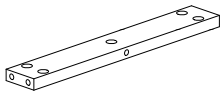

5 Crossbar

366 × 55 × 17MM

Quantity: 2

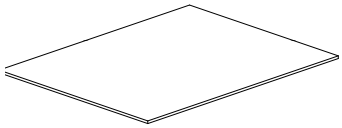

6 Back panel

482 × 376 × 5MM

Quantity: 1

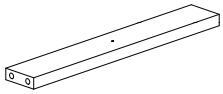

7 Middle crossbar

366 × 55 × 17MM

Quantity: 1

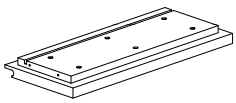

8 Drawer front

360 × 153.5 × 29MM

Quantity: 3

Parts List

CTG052 | 40CM 3 Drawers

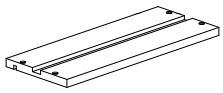

9 Drawer side

300 × 120 × 12MM

Quantity: 6

Slides preinstalled

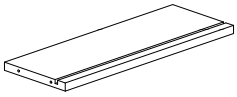

10 Drawer back

332 × 120 × 12MM

Quantity: 3

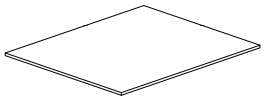

11 Drawer bottom

342 × 286 × 5MM

Quantity: 3

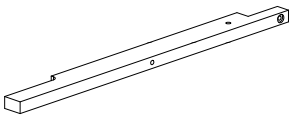

12 Lower upright

605 × 50 × 20MM

Quantity: 2

Parts List

CTG052 | 40CM 3 Drawers

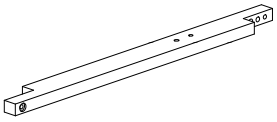

13 Middle left upright

605 × 50 × 20MM

Quantity: 1

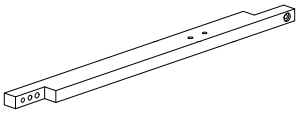

14 Middle right upright

605 × 50 × 20MM

Quantity: 1

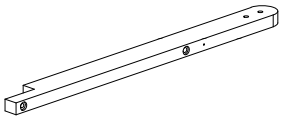

15 Upper left upright

605 × 50 × 20MM

Quantity: 1

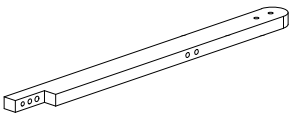

16 Upper right upright

605 × 50 × 20MM

Quantity: 1

Parts List

CTG052 | 40CM 3 Drawers

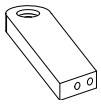

17 Rail end piece

255 × 50 × 20MM

Quantity: 1

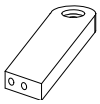

18 Rail end piece

255 × 50 × 20MM

Quantity: 1

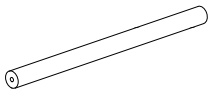

19 Round hanging rail

373 × Ø25MM

Quantity: 1

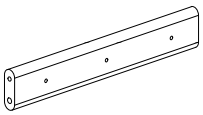

20 Peg crossbar

363 × 60 × 20MM

Quantity: 2

Parts List

CTG052 | 40CM 3 Drawers

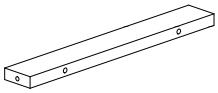

21 Lower rack crossbar

363 × 50 × 17MM

Quantity: 1

Hardware & Tools

CTG052 | 40CM 3 Drawers

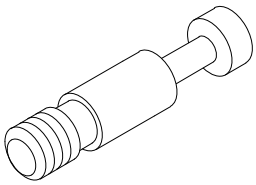

A Cam bolts

L=40MM

Quantity: 26 + 2

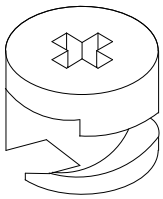

B Cam locks

15 × 11MM

Quantity: 26 + 2

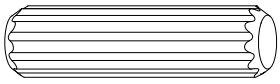

C Wood dowels

8 × 30MM

Quantity: 18 + 1

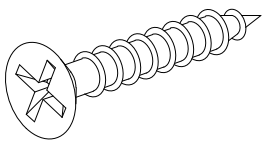

D Screws

#8 × 30MM

Quantity: 24 + 2

Hardware & Tools

CTG052 | 40CM 3 Drawers

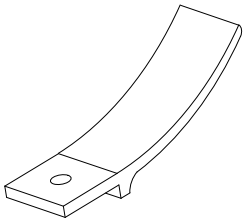

E Retaining clips

L=50MM

Quantity: 3

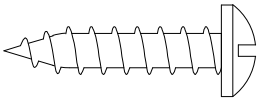

F Screws

#3.5 × 15MM

Quantity: 5

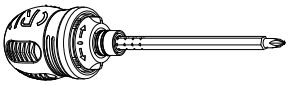

G Ratchet screwdriver

M6 × 136MM

Quantity: 1

Reusable tool

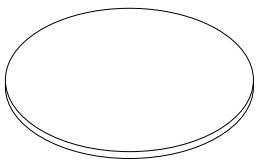

H Cover stickers

20MM

Quantity: 14 + 2

Hardware & Tools

CTG052 | 40CM 3 Drawers

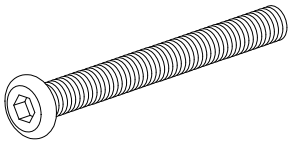

I Hex socket bolts

M6 × 65MM

Quantity: 2

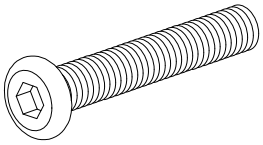

J Hex socket bolts

M6 × 35MM

Quantity: 16 + 1

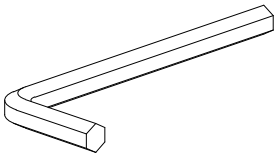

K Hex key

M4 × 100MM

Quantity: 1

Reusable tool

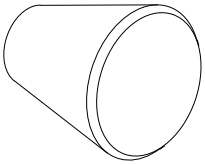

L Pegs

20 × 23MM

Quantity: 6

Hardware & Tools

CTG052 | 40CM 3 Drawers

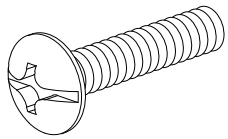

M Screws

M4 × 25MM

Quantity: 6

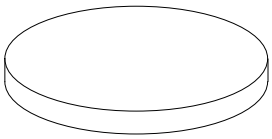

N Pads

Ø15 × 3MM

Quantity: 2

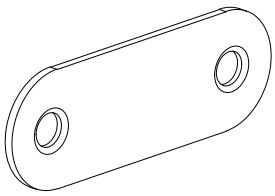

O Wall restraint plates

45 × 12 × 1.2MM

Quantity: 2

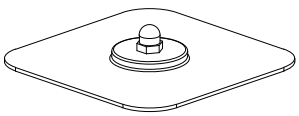

P Wall mounting pads

60 × 60MM

Quantity: 2

Hardware & Tools

CTG052 | 40CM 3 Drawers

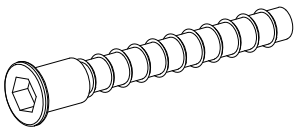

Q Socket-head screws

#7 × 50MM

Quantity: 4

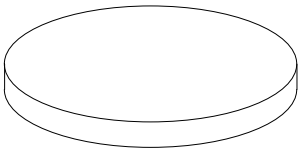

R Base pads

Ø30 × 3MM

Quantity: 4

Ratchet Screwdriver

CTG052 | 40CM 3 Drawers

1. Manual operation setting
2. Ratchet setting
3. Reverse ratchet setting
4. Press-fit, removable and telescoping bits.

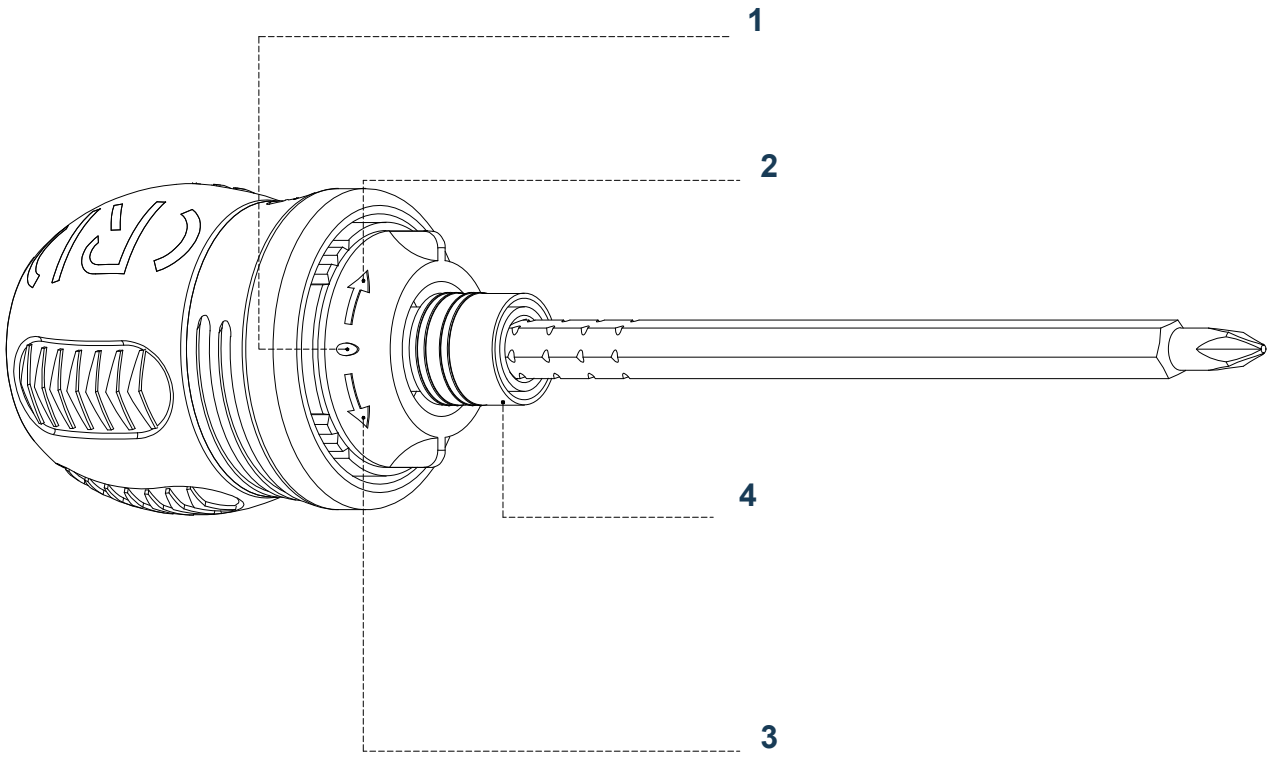

Before Assembly

CTG052 | 40CM 3 Drawers

Check all parts against the parts and hardware lists before assembly.

Use the correct screws to avoid splitting or damaging the panels.

The cabinet and drawer slides shown in the diagrams are preinstalled.

Tools G and K are reused throughout assembly.

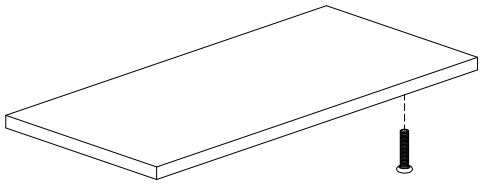

Example

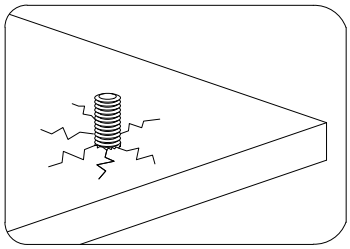

Incorrect: oversized screw

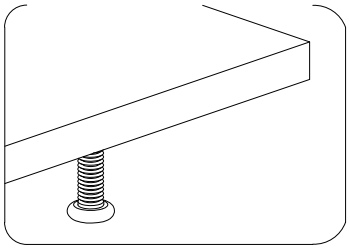

Correct: matching screw

Step 1

CTG052 | 40CM 3 Drawers

Install Cam Bolts A in Side Panels 3 and 4 using Tool G.

Hardware: A × 12 Tool: G (reuse)

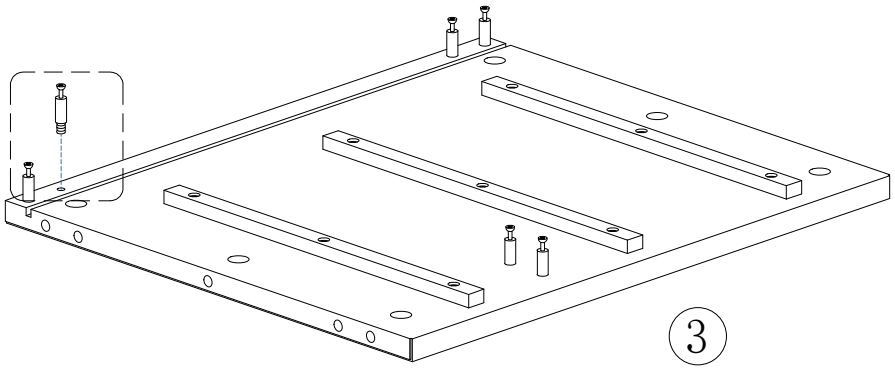

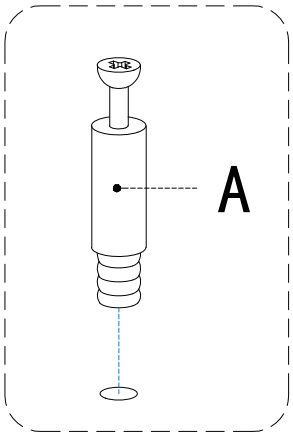

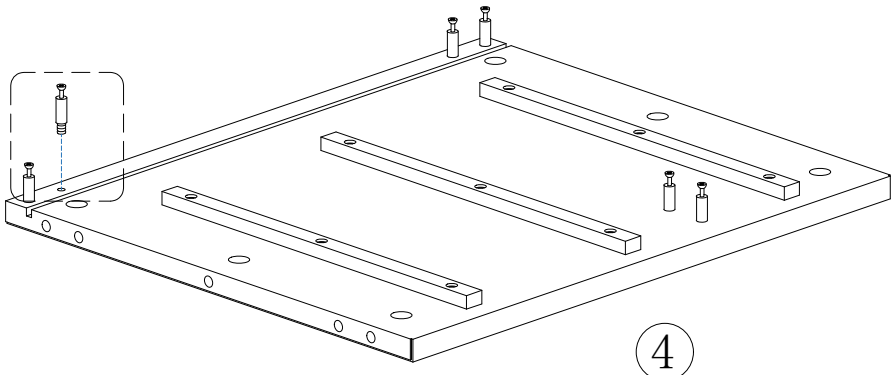

Step 2

CTG052 | 40CM 3 Drawers

Install Cam Bolts A in Panels 1 and 2 using Tool G.

Attach one Retaining Clip E to each of Parts 1, 2 and 7 using F.

Hardware: A × 14 E × 3 F × 3 Tool: G (reuse)

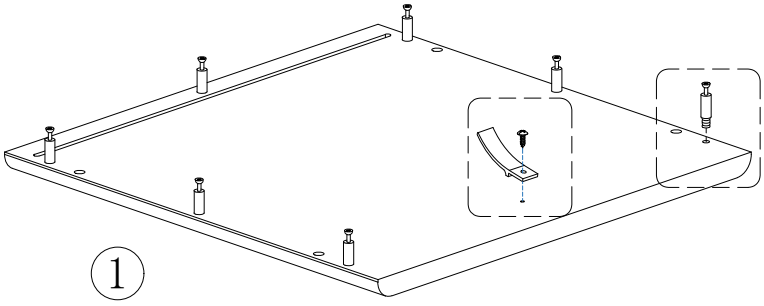

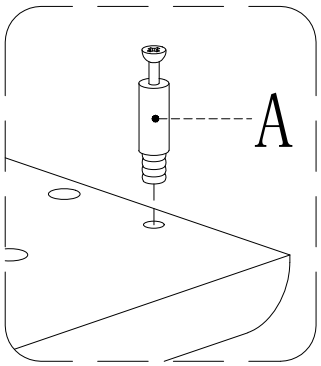

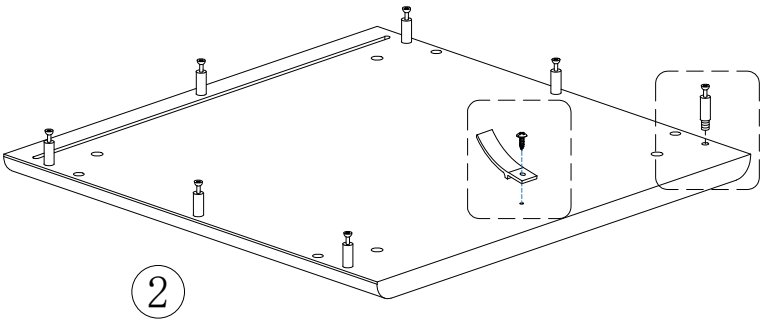

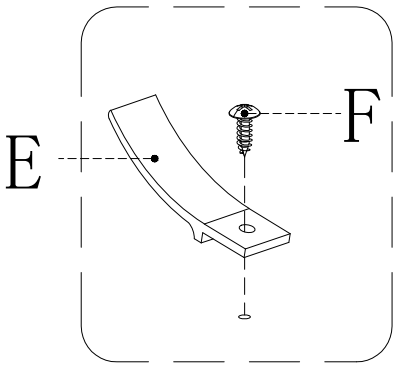

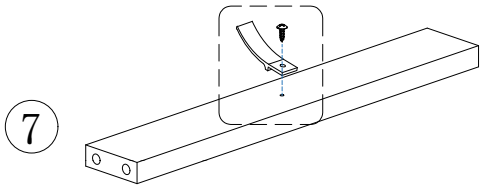

Step 3

CTG052 | 40CM 3 Drawers

Join Panels 3 and 4 to both Crossbars 5 and Middle Crossbar 7
using Cam Locks B. Orient the arrows and center holes as shown.
Tighten with Tool G and apply Cover Stickers H at Crossbars 5.
Hardware: B × 12 H × 8 Tool: G (reuse)

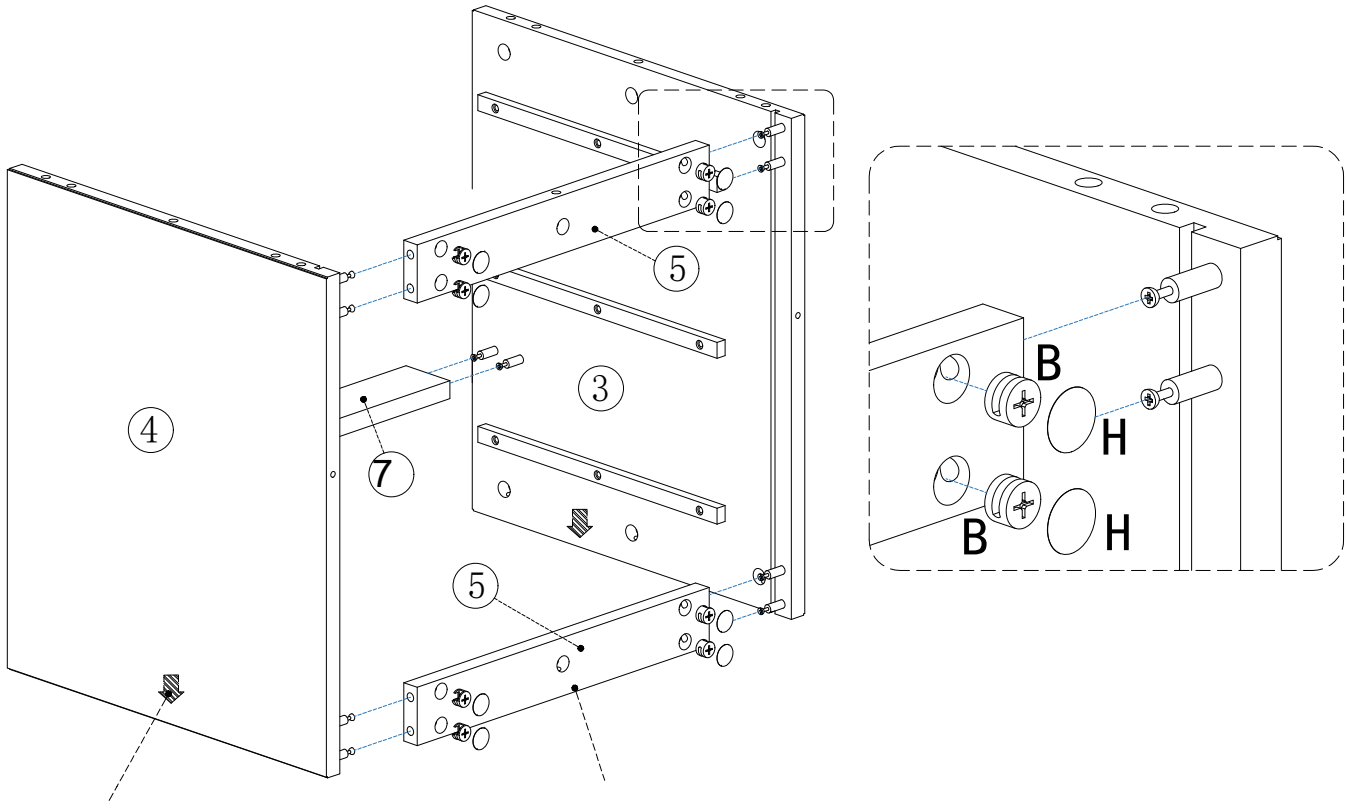

Step 4

CTG052 | 40CM 3 Drawers

Attach Top Panel 1 to the assembly using Dowels C and Cam Locks B.
Tighten with Tool G. Keep the orientation shown.
Hardware: B × 6 C × 4 Tool: G (reuse)

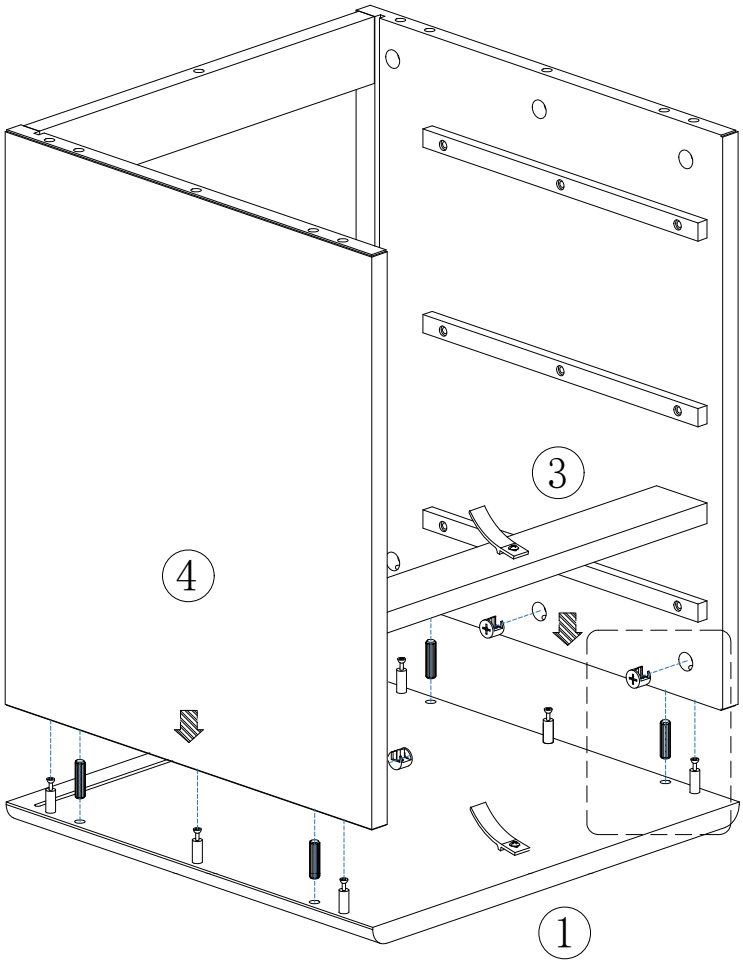

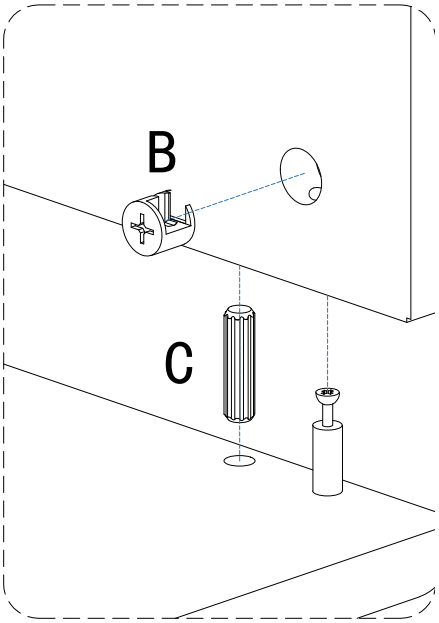

Step 5

CTG052 | 40CM 3 Drawers

Slide Back Panel 6 into the grooves of the assembly from Step 4.

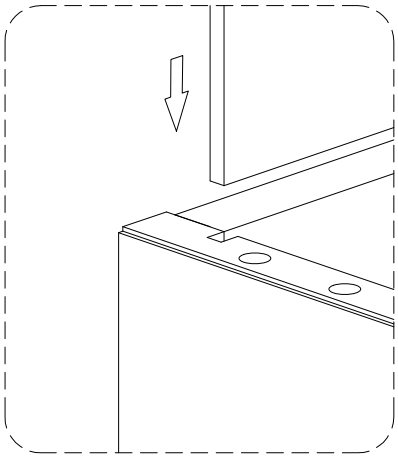

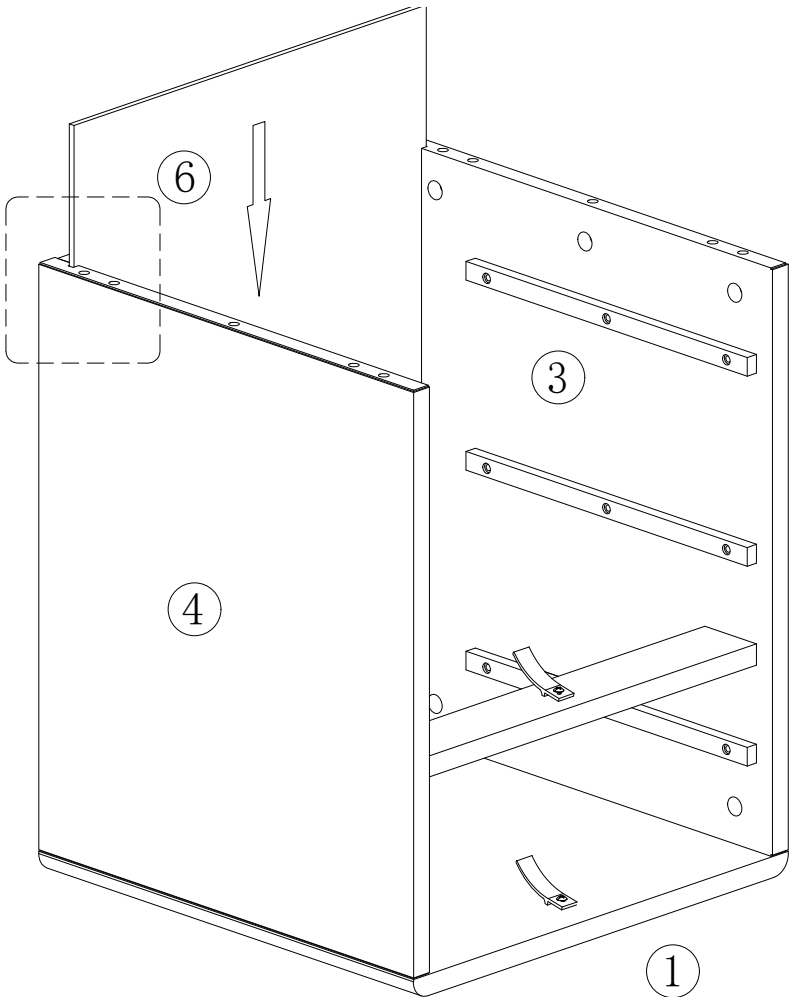

Step 6

CTG052 | 40CM 3 Drawers

Attach Base Panel 2 using Dowels C and Cam Locks B.
Tighten with Tool G.
Hardware: B × 6 C × 4 Tool: G (reuse)

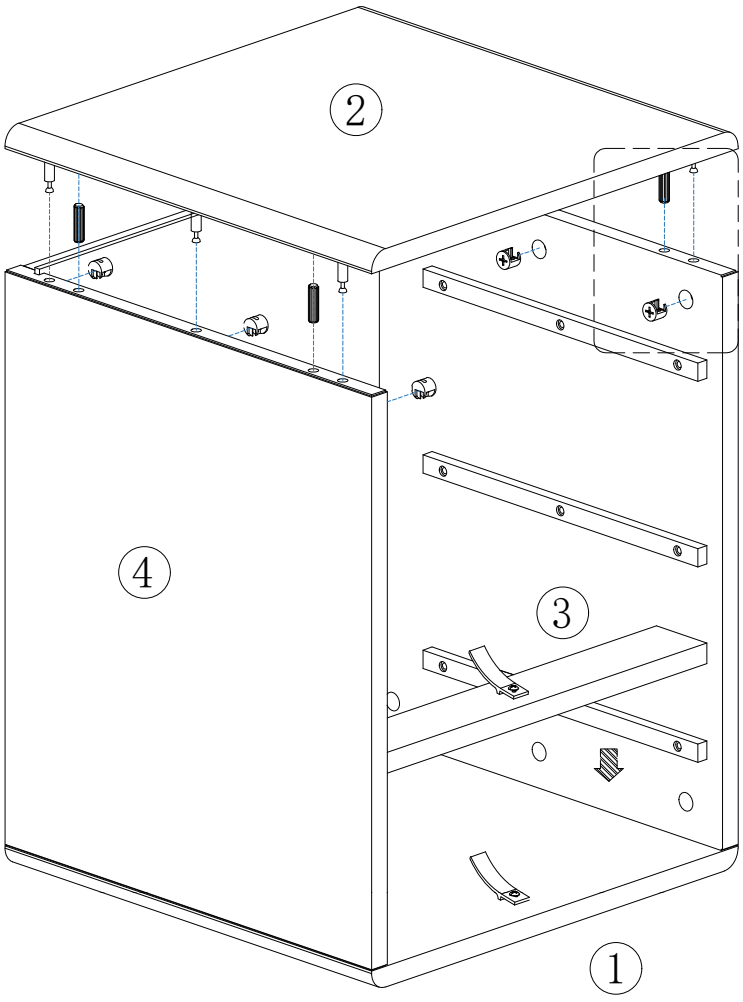

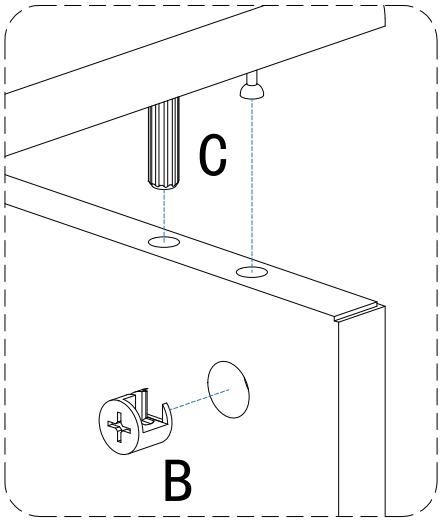

Step 7

CTG052 | 40CM 3 Drawers

Secure Panels 1 and 2 to Crossbars 5 using Cam Locks B.
Tighten with Tool G and apply Cover Stickers H.
Attach all four Pads R to Base Panel 2, as shown.
Hardware: B × 2 H × 2 R × 4 Tool: G (reuse)

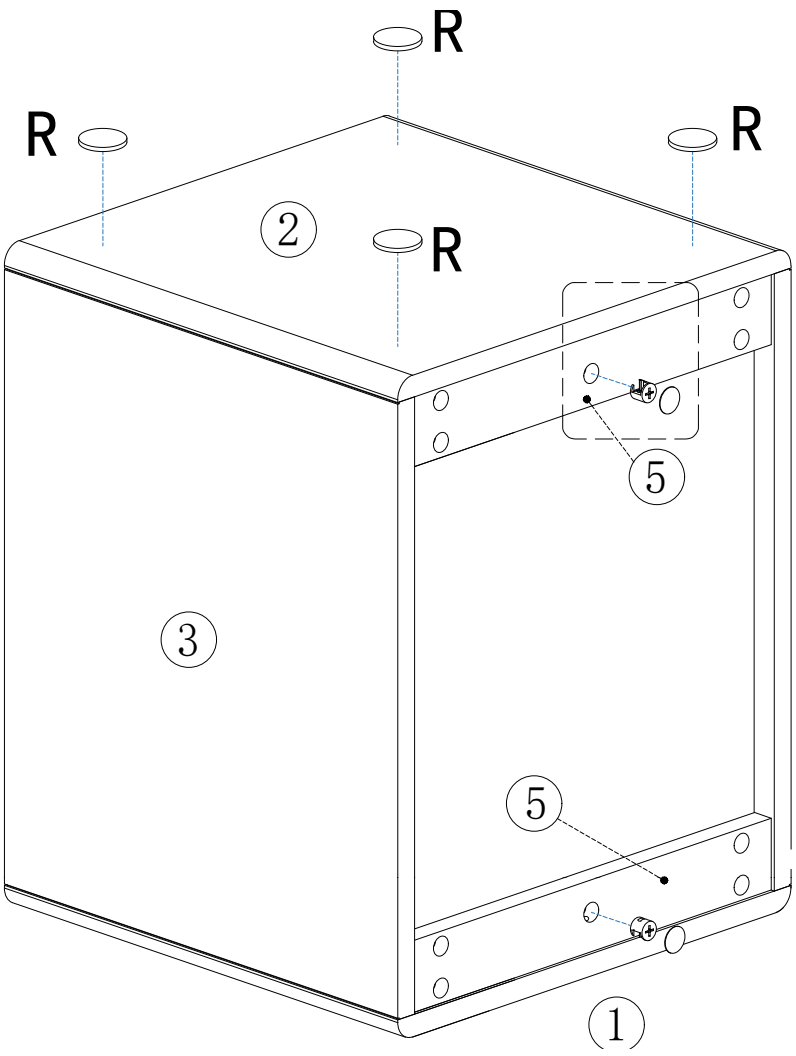

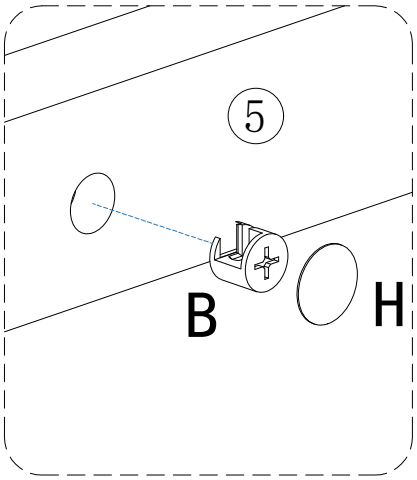

Step 8

CTG052 | 40CM 3 Drawers

Attach two Drawer Sides 9 to each Drawer Front 8 using Screws D.
Make three identical drawers.
Hardware for all three drawers: D × 12 Tool: G (reuse)

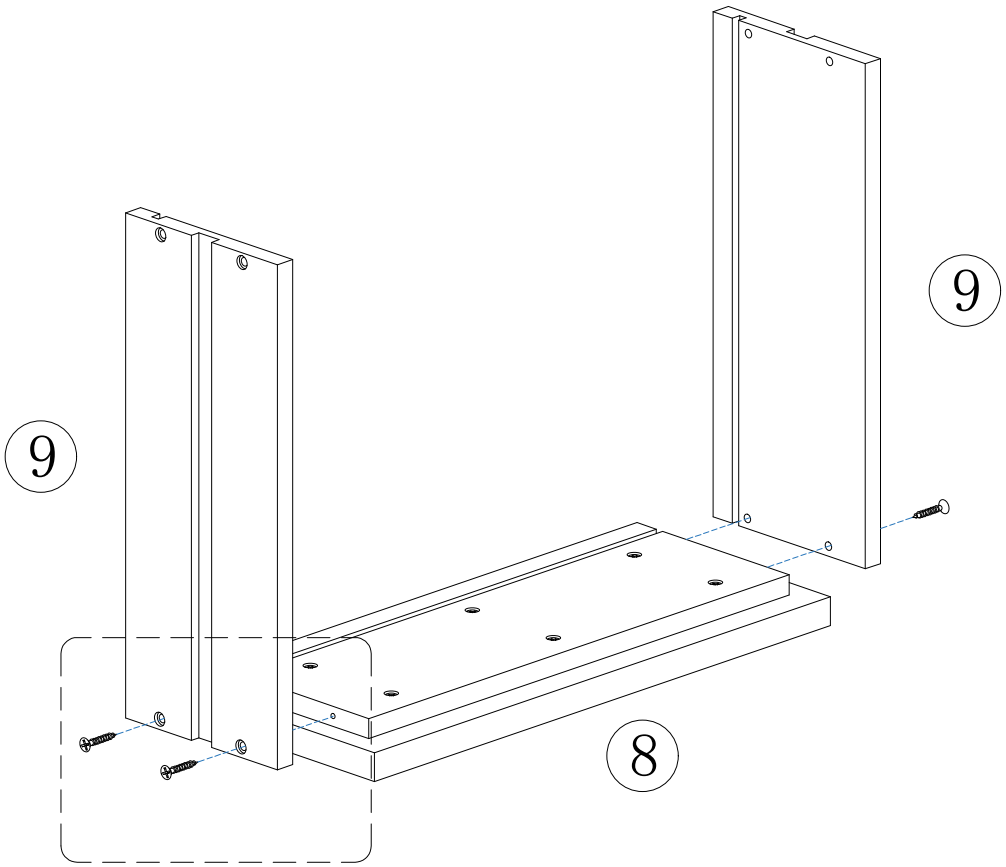

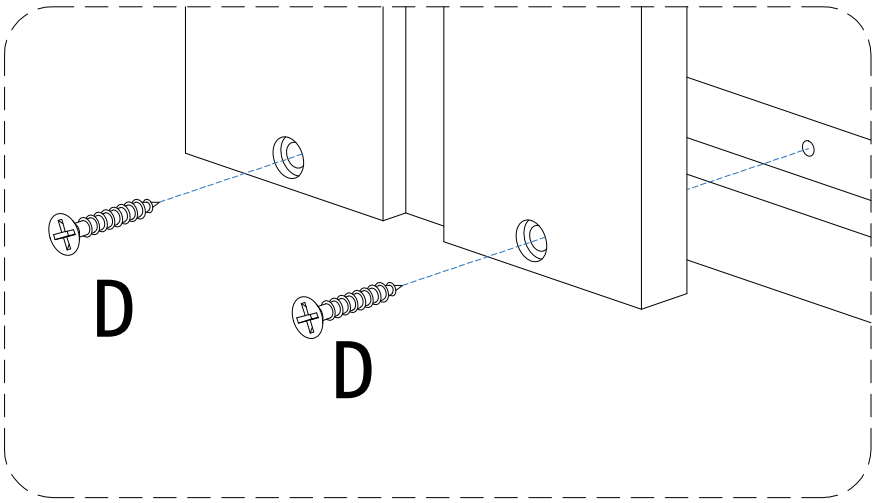

Step 9

CTG052 | 40CM 3 Drawers

Slide Bottom Panel 11 into the grooves of each drawer.
Repeat for all three drawers.

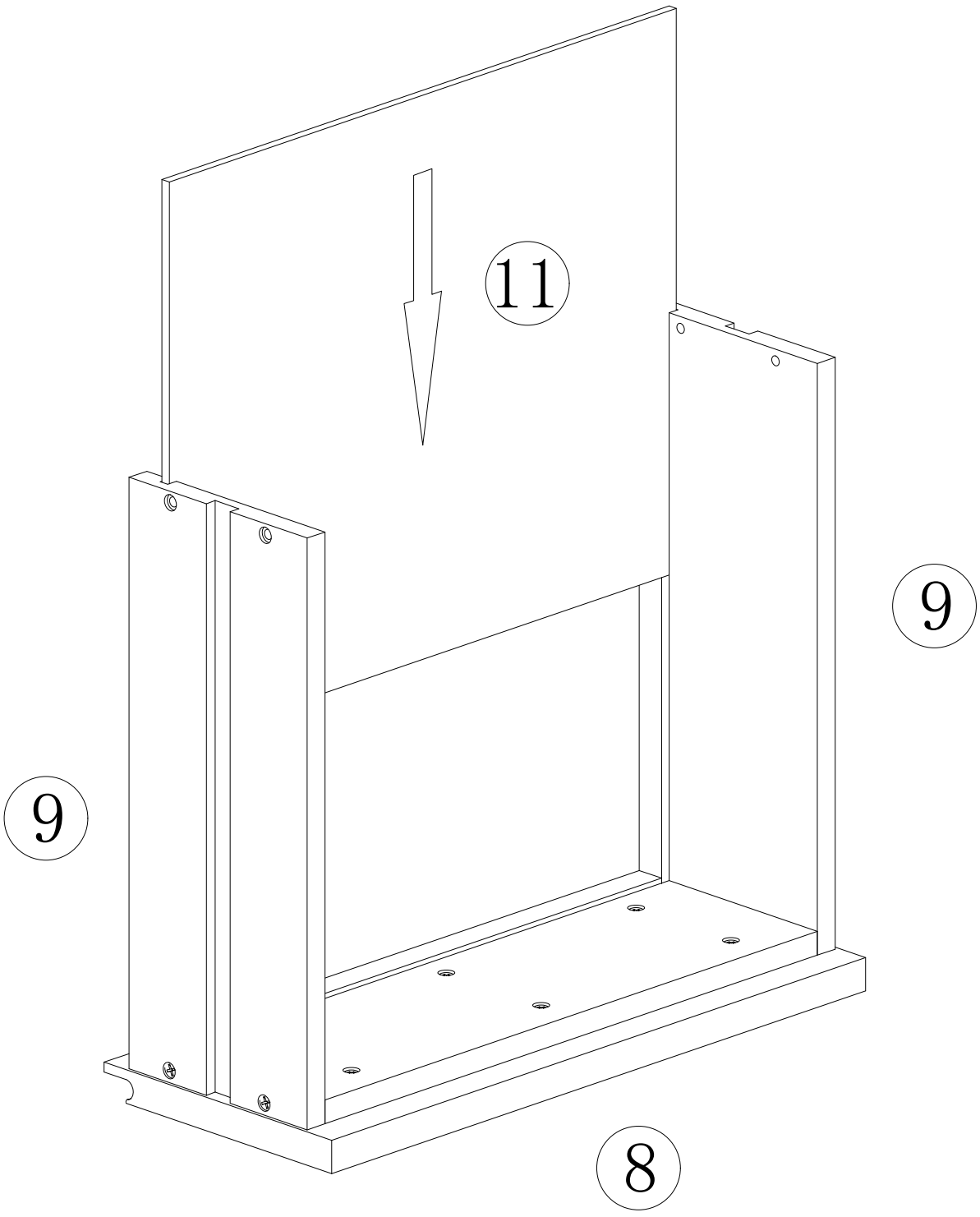

Step 10

CTG052 | 40CM 3 Drawers

Attach Back Panel 10 to Drawer Sides 9 using Screws D.
Repeat for all three drawers.
Hardware for all three drawers: D × 12 Tool: G (reuse)

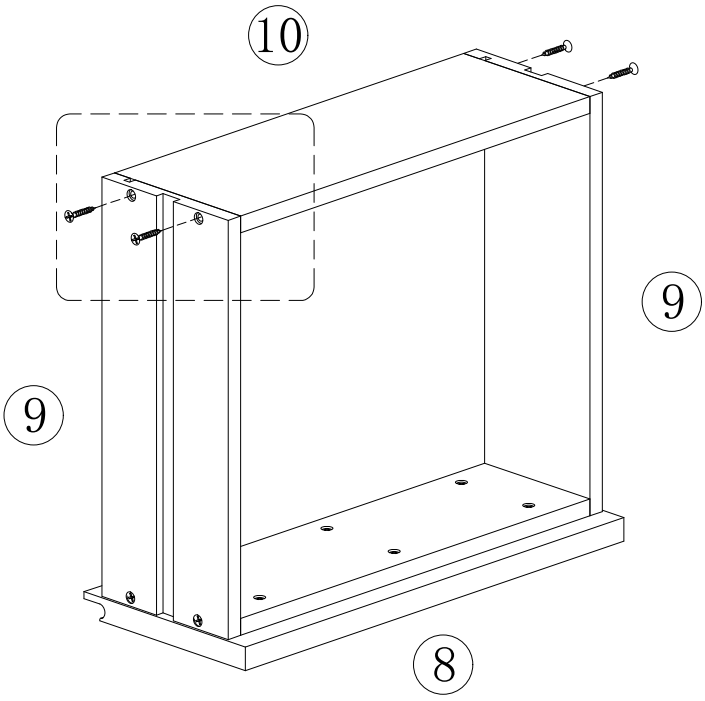

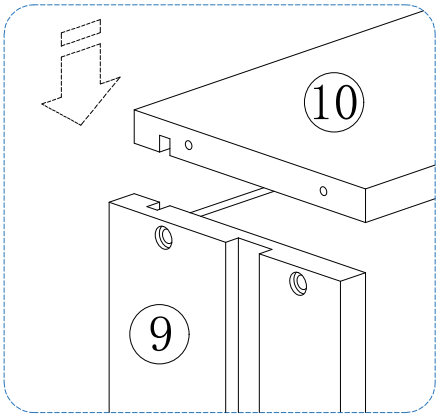

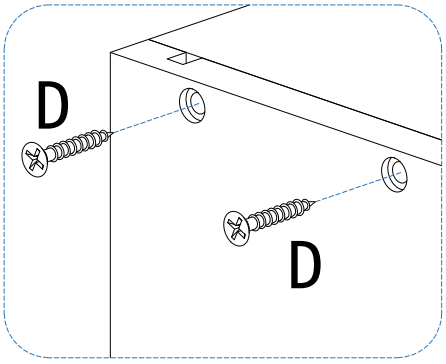

Step 11

CTG052 | 40CM 3 Drawers

Align the drawer slides and slide all three assembled drawers into the cabinet from Step 7, as shown.

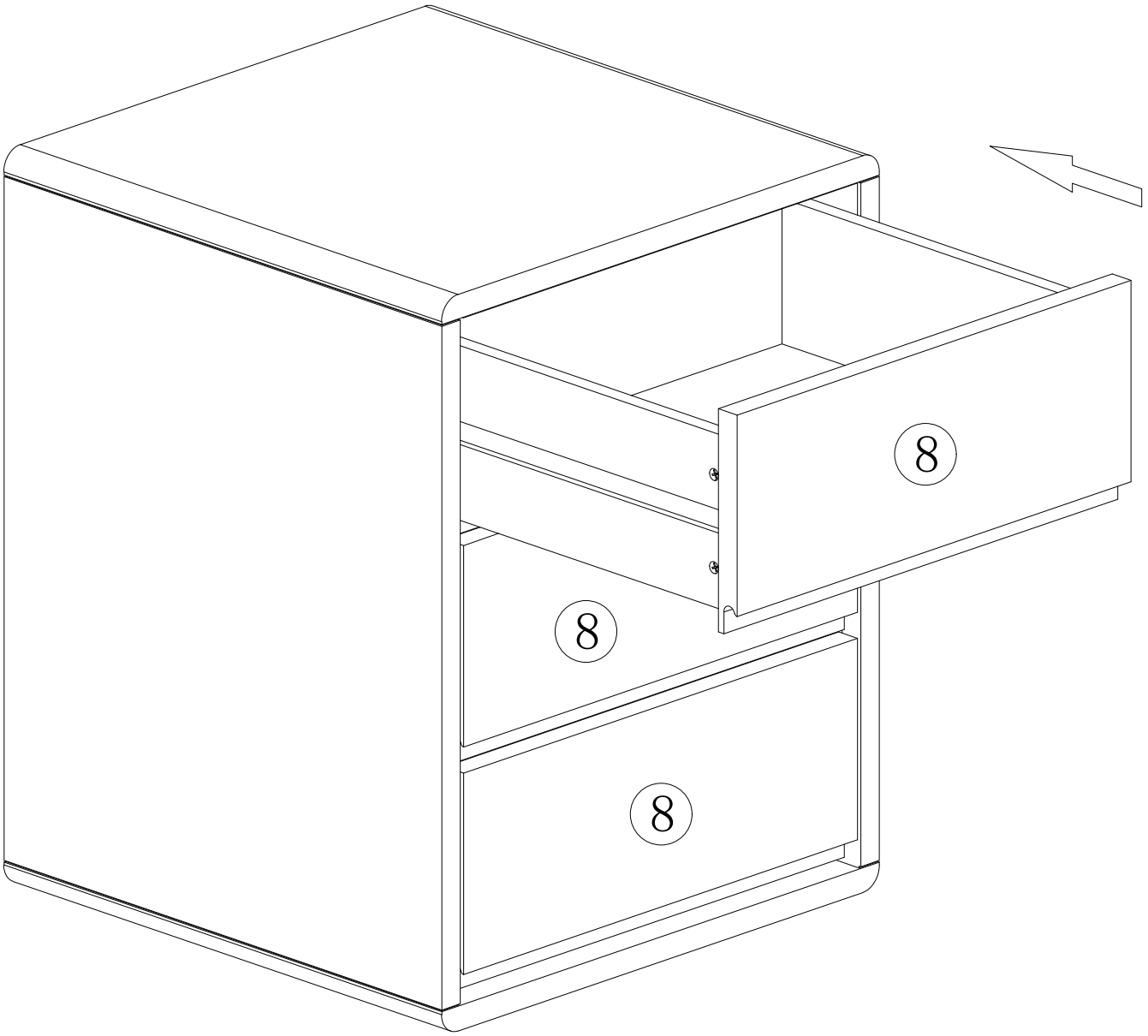

Step 12

CTG052 | 40CM 3 Drawers

Attach Pegs L to both Crossbars 20 using Screws M and Tool G.

Hardware: L × 6 M × 6 Tool: G (reuse)

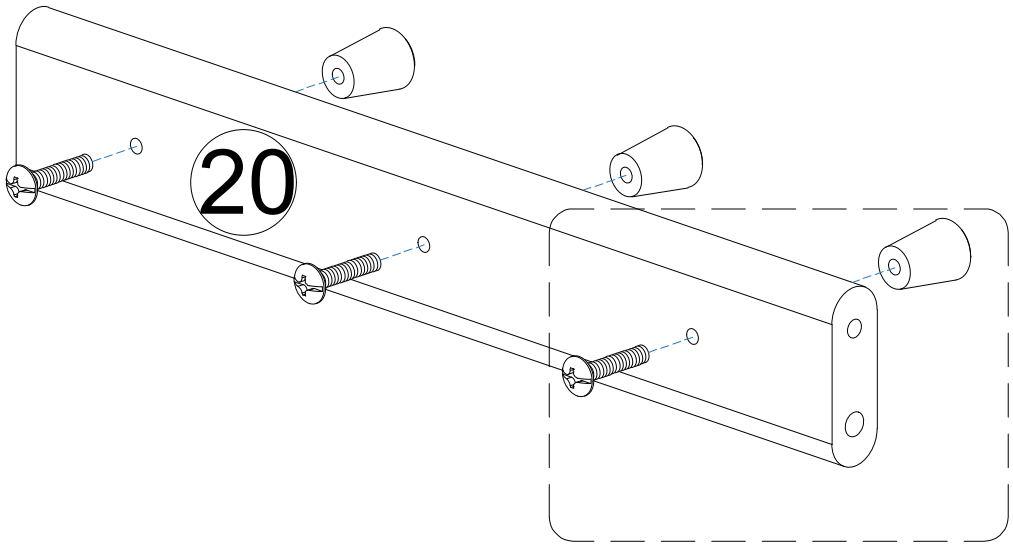

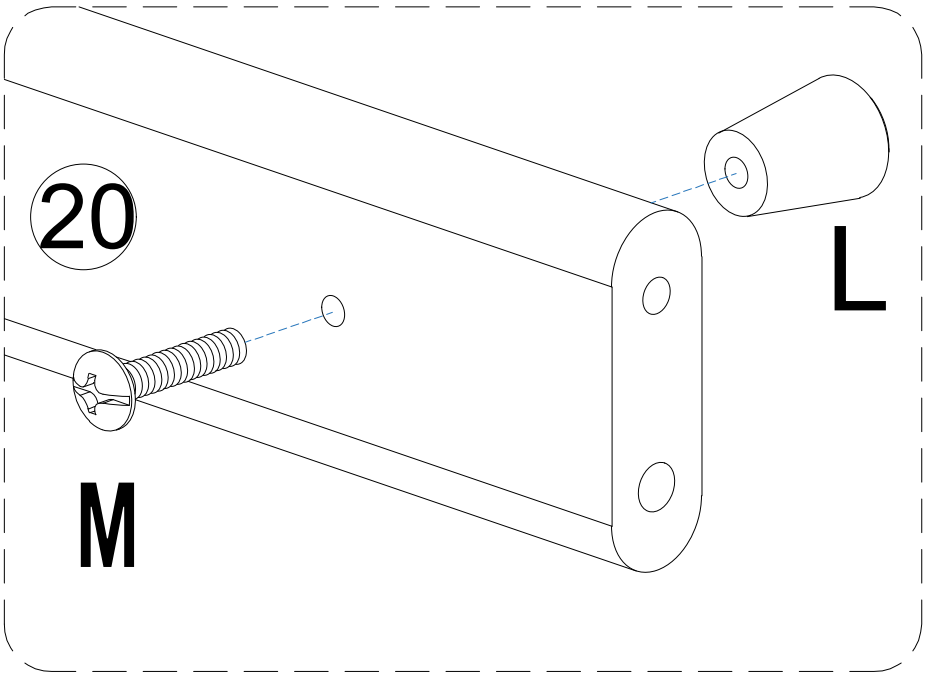

Step 13

CTG052 | 40CM 3 Drawers

Join Parts 17, 18 and 19 using Bolts J and Hex Key K.

Hardware: J × 2 Tool: K (reuse)

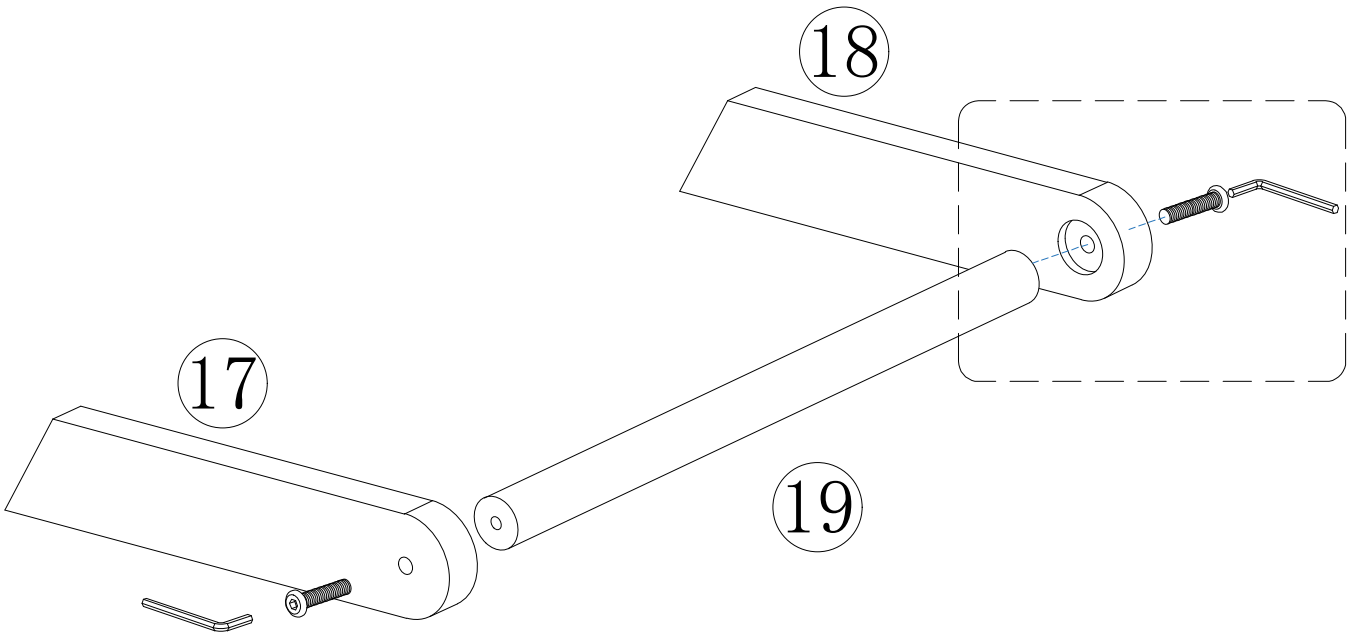

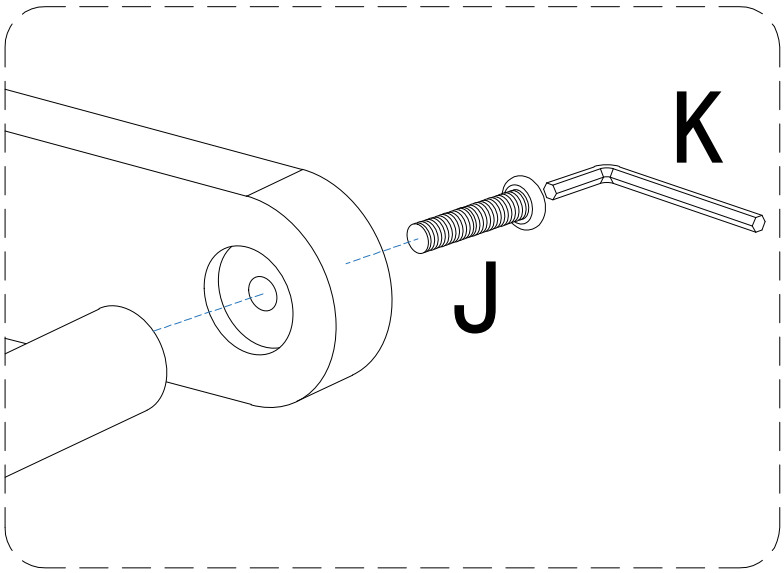

Step 14

CTG052 | 40CM 3 Drawers

Join Parts 12, 13 and 15 to form one upright.
Join Parts 12, 14 and 16 to form the other upright.
Use Dowels C and Bolts J with Hex Key K.
Hardware: C × 4 J × 8 Tool: K (reuse)

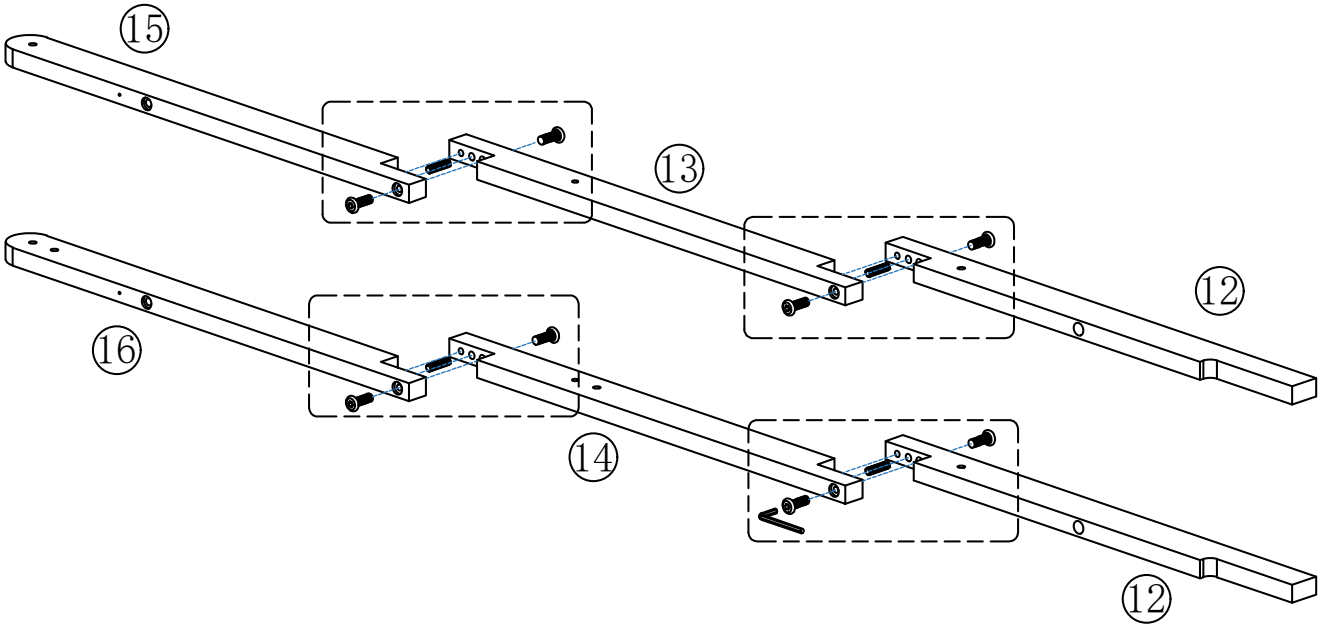

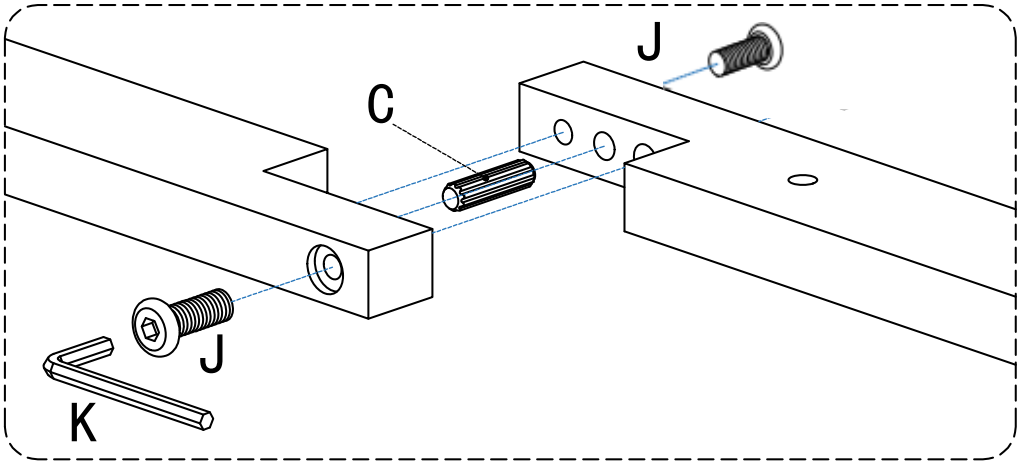

Step 15

CTG052 | 40CM 3 Drawers

Attach both Crossbars 20 and Crossbar 21 between the uprights
from Step 14 using Dowels C and Bolts J.
Leave the fasteners at Crossbar 21 loose for now.
Hardware: C × 4 J × 6 Tool: K (reuse)

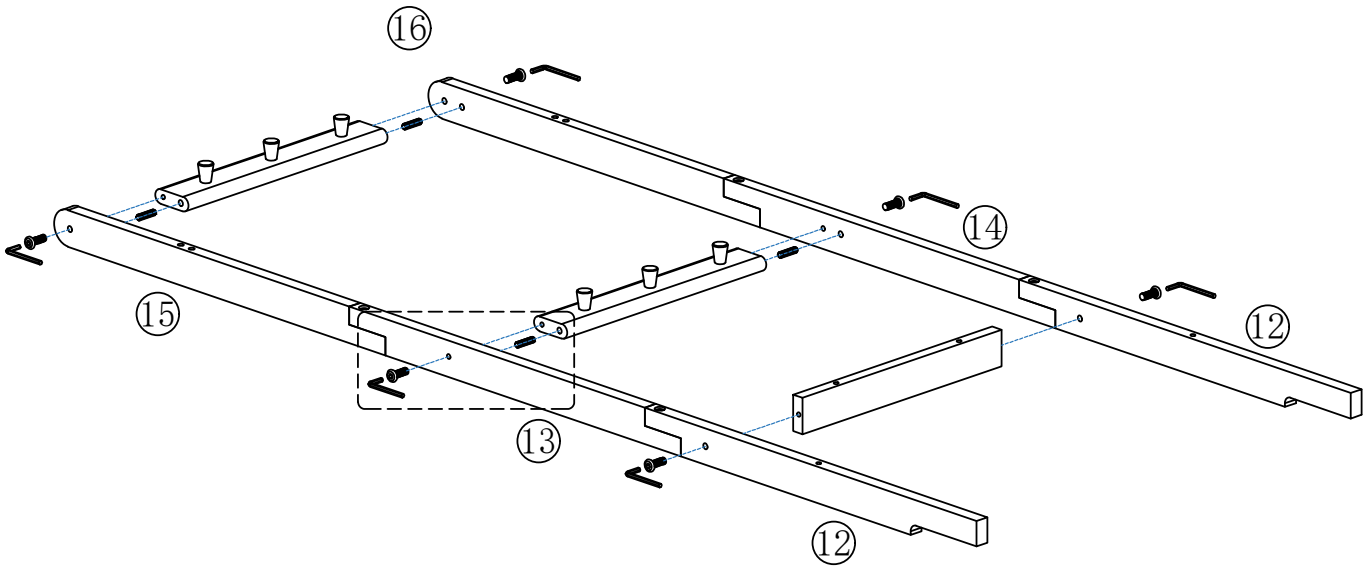

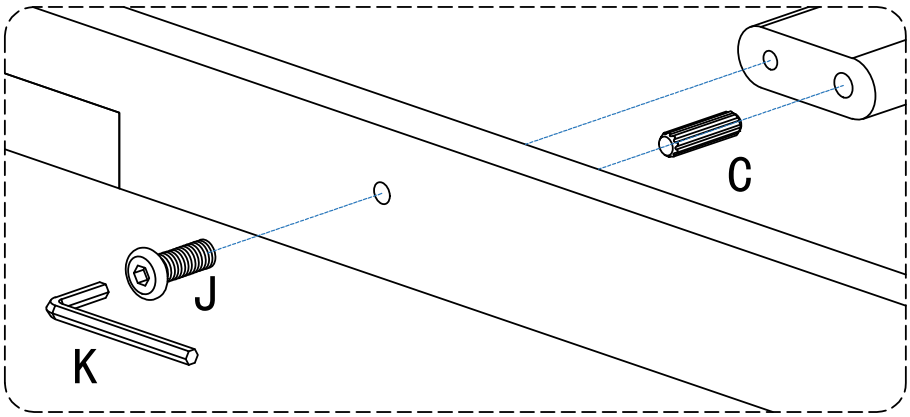

Step 16

CTG052 | 40CM 3 Drawers

Join the rail assembly from Step 13 to the rack from Step 15
using Dowels C and Bolts I. Attach Pads N to the bottoms of Parts 12.
Hardware: C × 2 I × 2 N × 2 Tool: K (reuse)

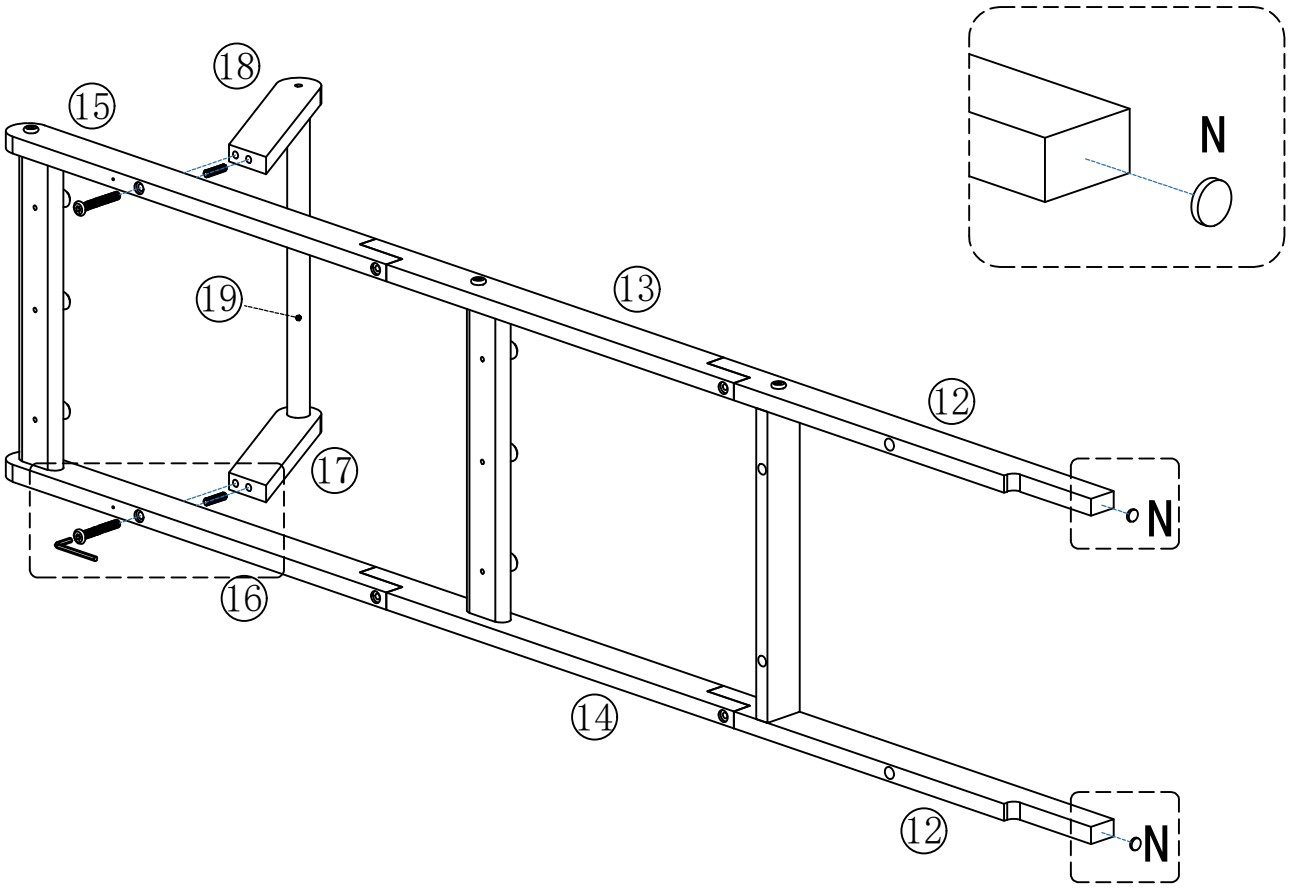

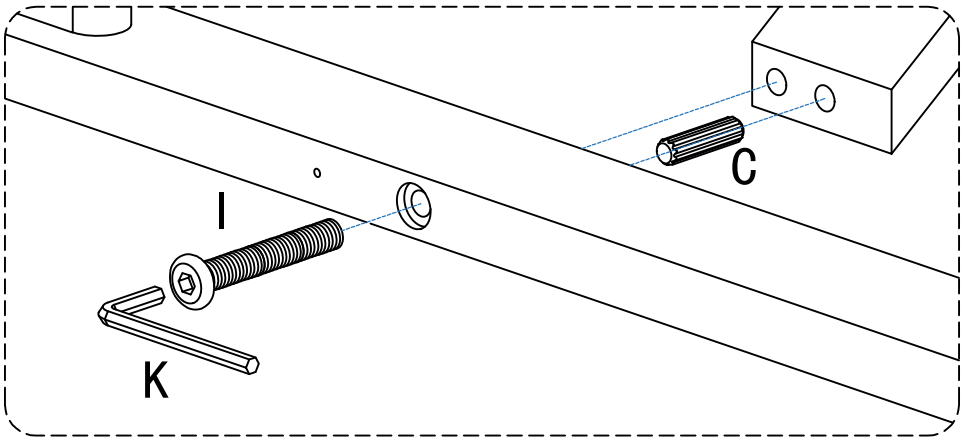

Step 17

CTG052 | 40CM 3 Drawers

Attach the rack from Step 16 to the back of the cabinet
from Step 11 using Screws Q and Hex Key K.
Align all screw holes before fully tightening the screws.
Hardware: Q × 4 Tool: K (reuse)

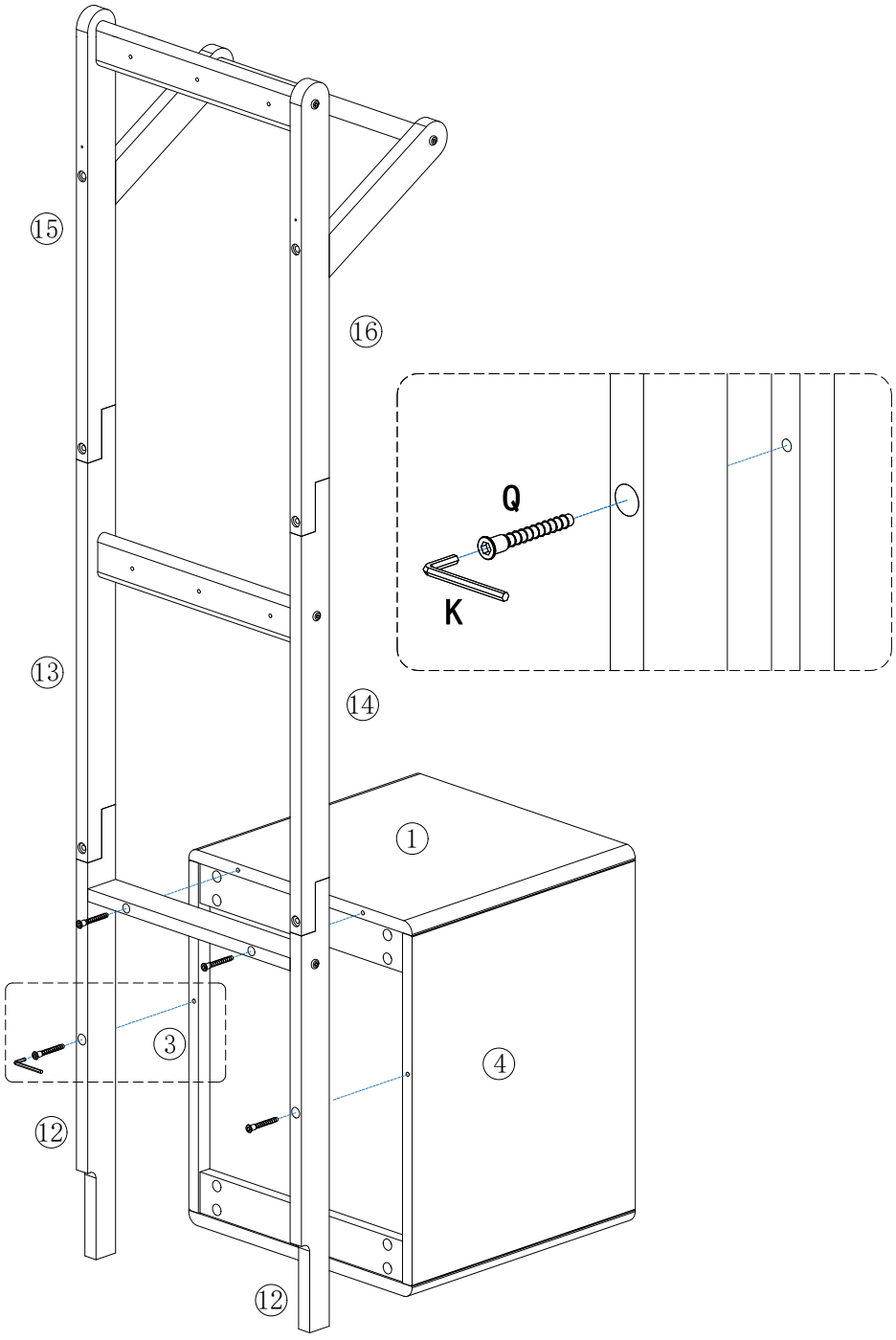

Step 18

CTG052 | 40CM 3 Drawers

First tighten the fasteners at both ends of Crossbar 21.
Attach Wall Restraint Plates O to Parts 15 and 16 as shown,
using Screws F and Tool G.
Hardware: O × 2 F × 2 Tools: G and K (reuse)

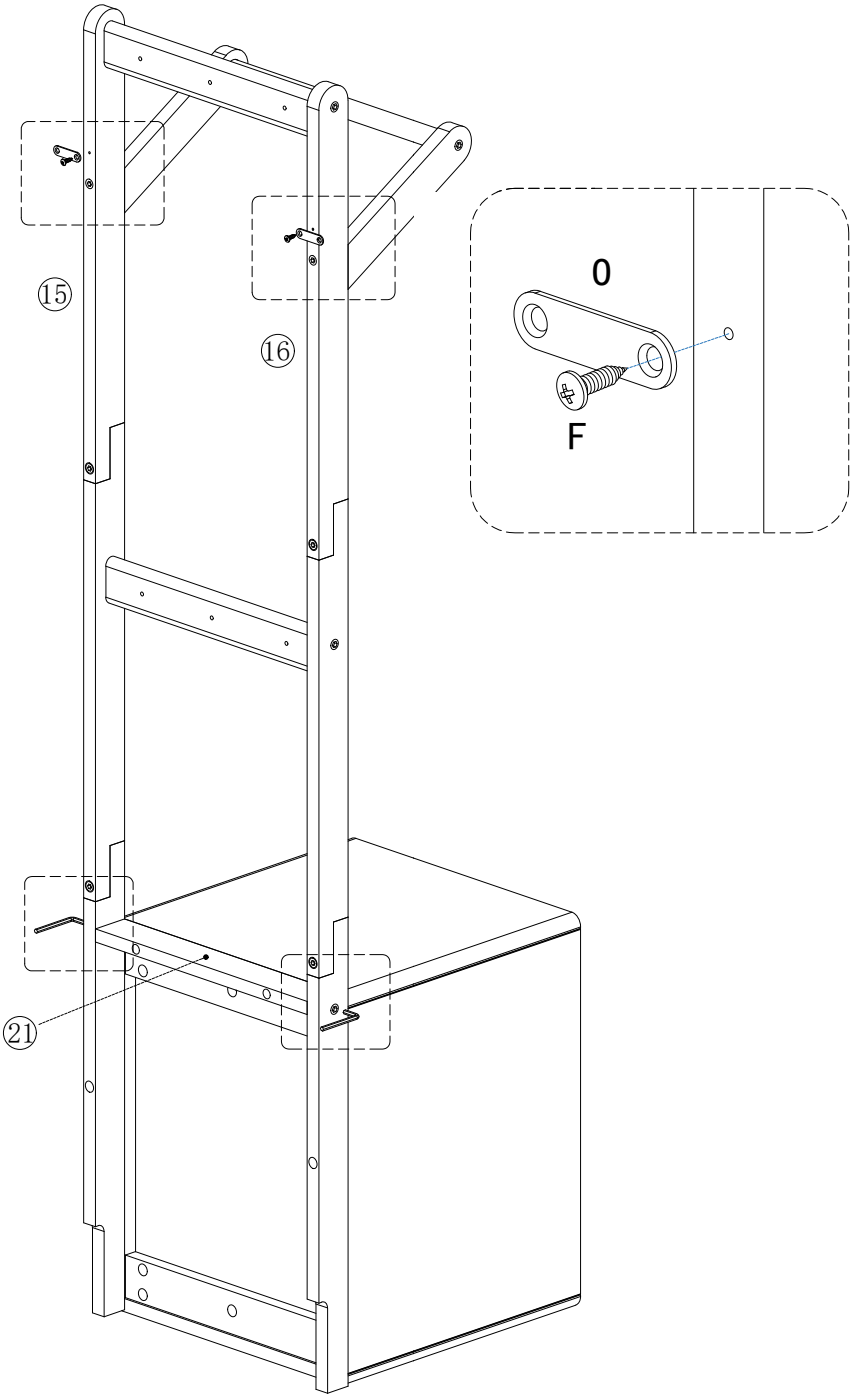

Step 19

CTG052 | 40CM 3 Drawers

Position Wall Mounting Pads P as shown and secure the unit to the wall.

Apply Cover Stickers H to the four indicated holes.

Hardware: P × 2 H × 4

