Kitchen Cart

Assembly instructions-Please keep for future rerence

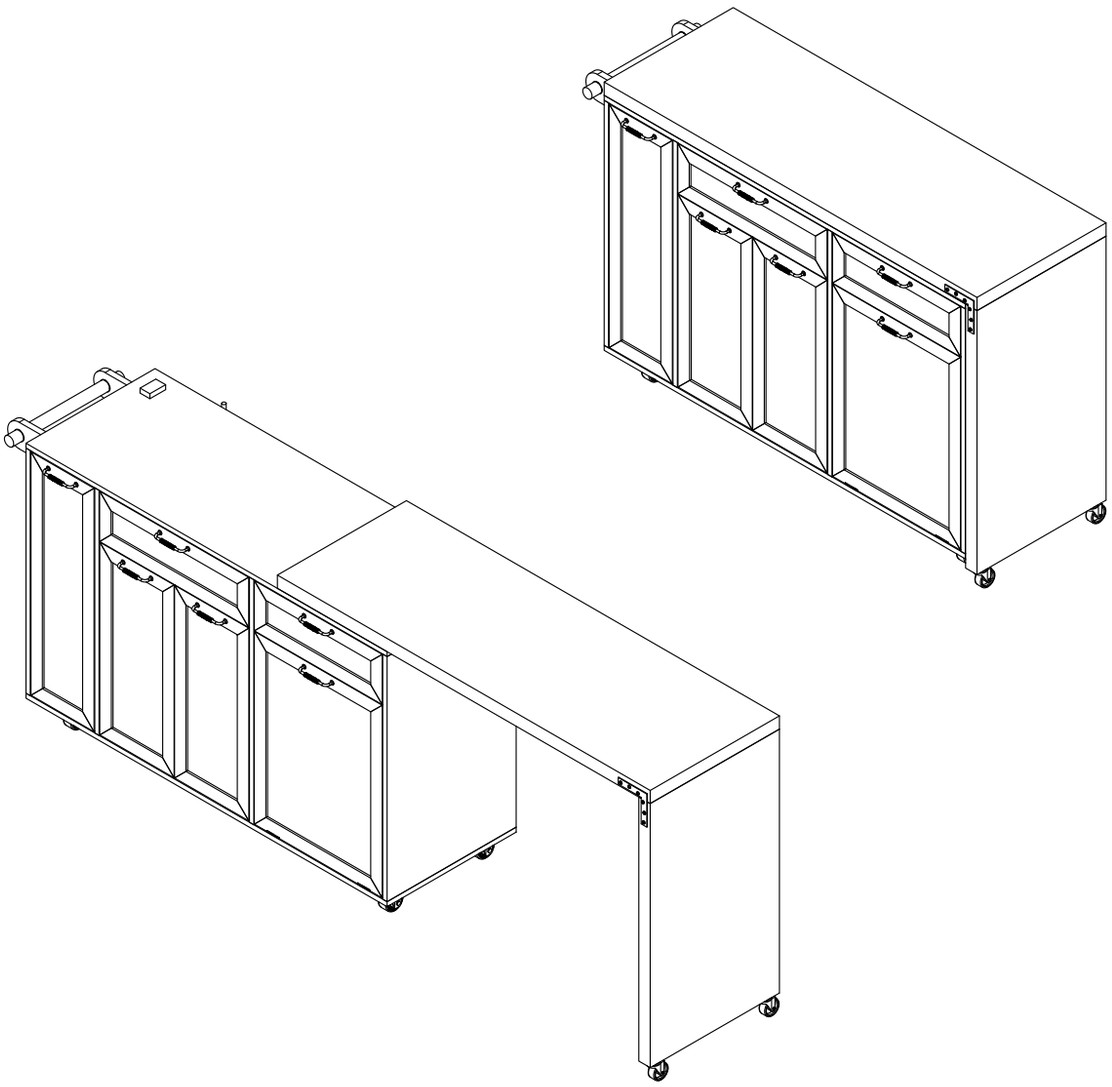

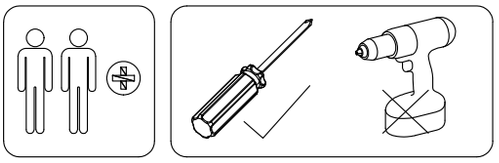

Important-Please read these instructions fully before starting assembly

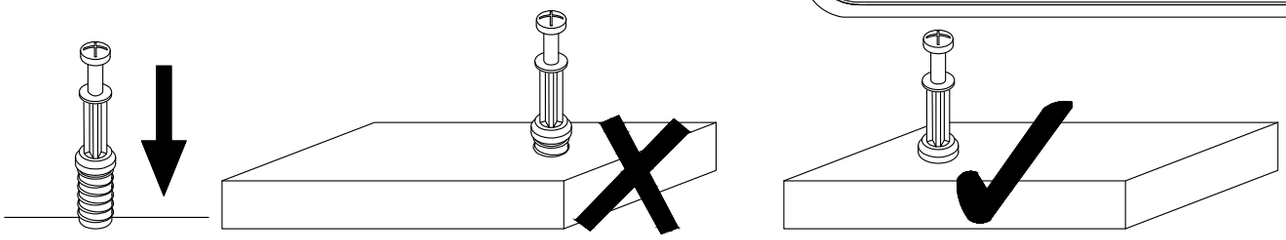

QUICKFIT:Tighten quickfit until shoulder is flush with panel.
Do not overtighten or undertighten.

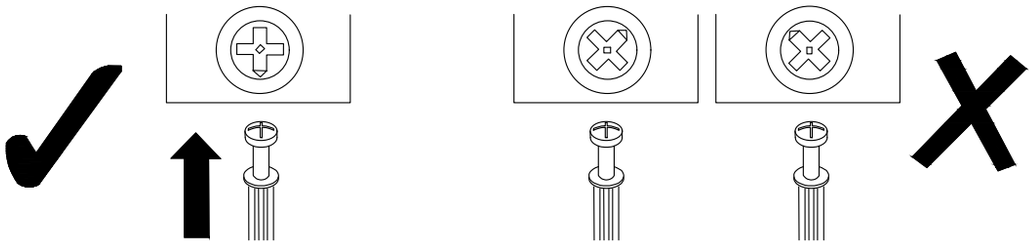

LOCK:When fitting cam lock,ensure starting position is correct before you insert connecting quickfit.

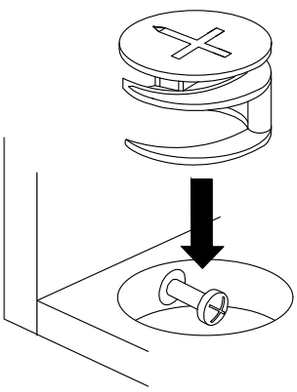

Quickfit head should be in the centre of the cam lock when the two panels are joined.
Cam lock should be inserted before quickfit.

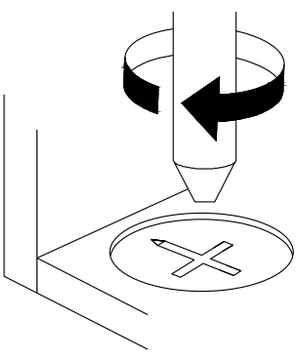

Turn cam lock clockwise to tighten.

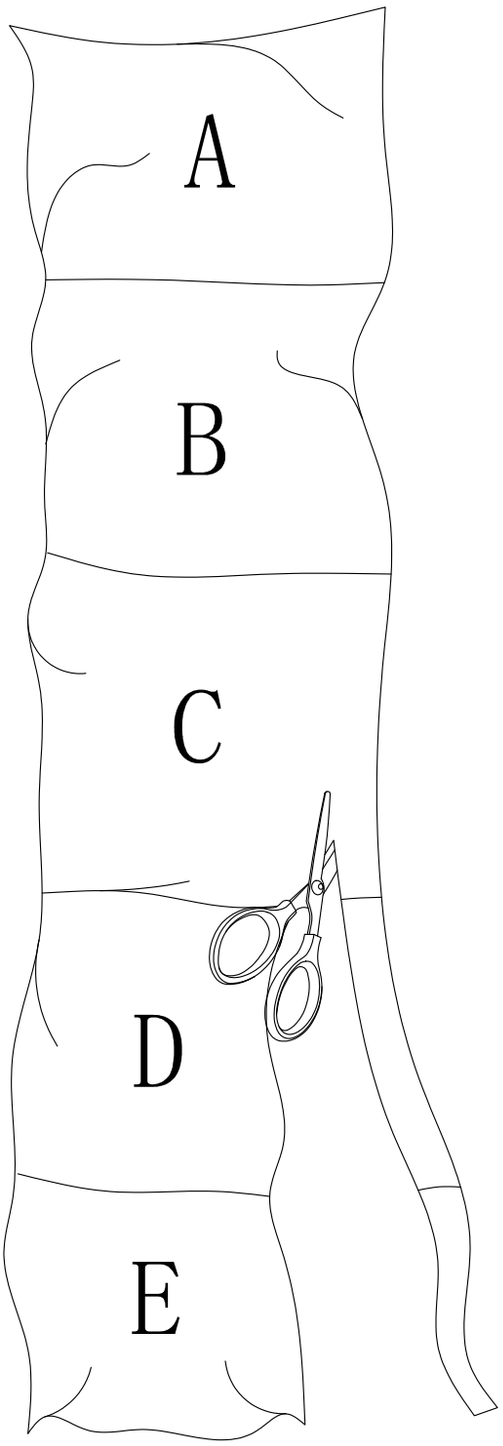

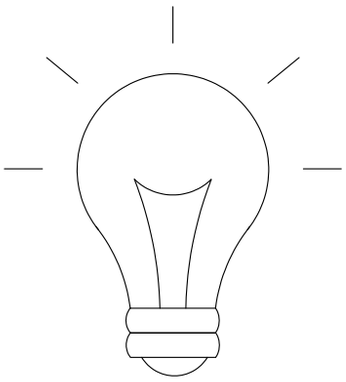

friendly reminder

To avoid errors and confusion during the installation of accessories, use the type and quantity of hardware accessories according to the installation procedure described in the instructions. First, unroll the accessories bag and lay out the hardware accessories, cut holes in the side, and take out the hardware accessories

Assembly Instructions

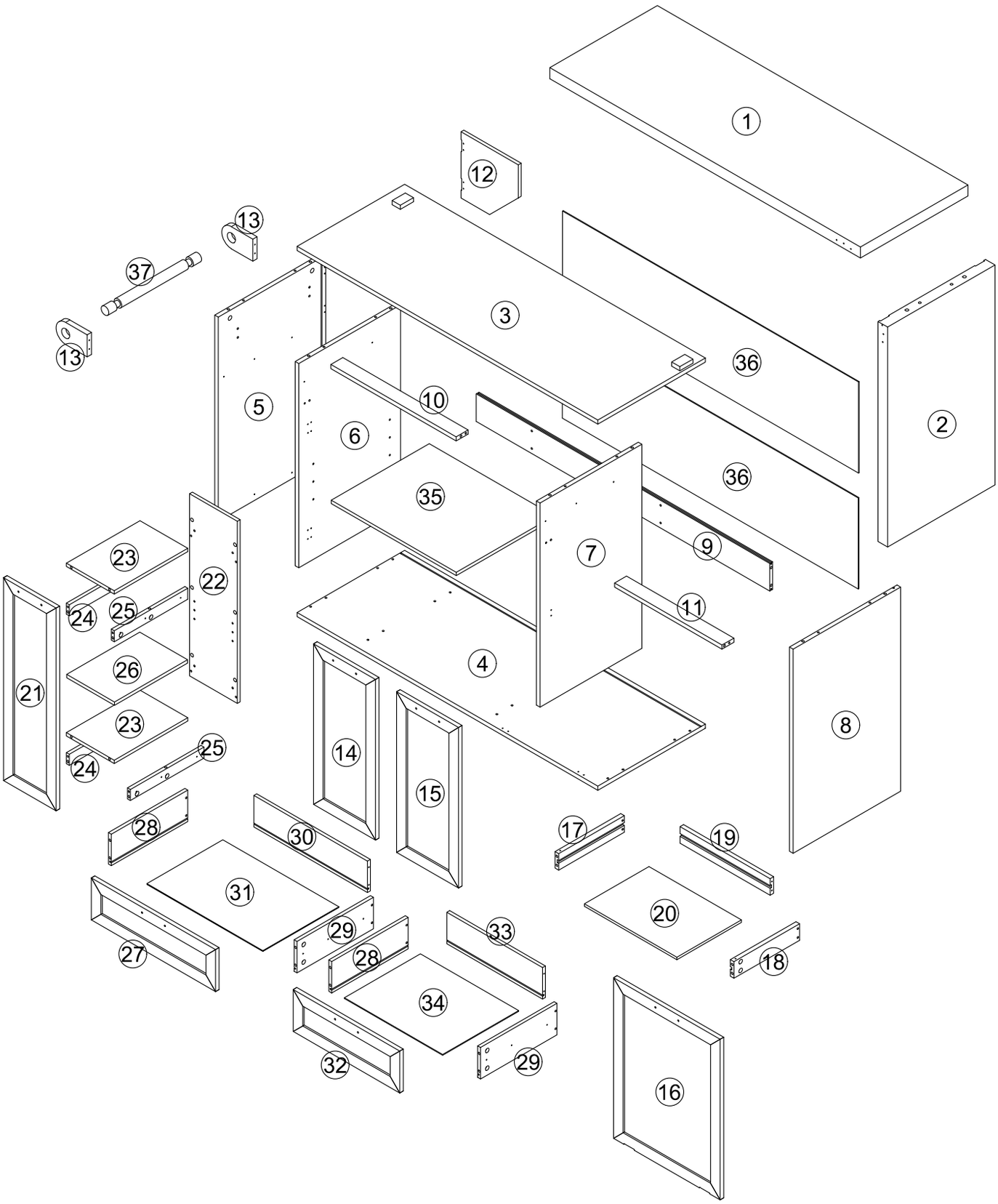

NO.	PARTS	QTY
2	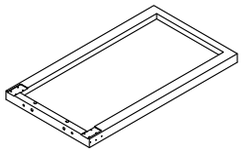	x1
NO.	PARTS	QTY
5	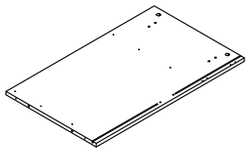	x1
NO.	PARTS	QTY
6	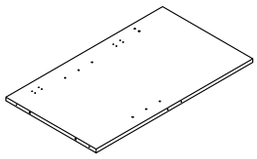	x1
NO.	PARTS	QTY
7	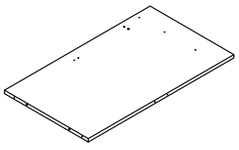	x1
NO.	PARTS	QTY
11	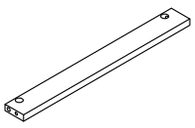	x1
NO.	PARTS	QTY
17	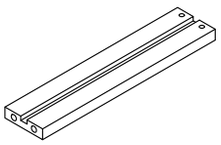	x1
NO.	PARTS	QTY
18	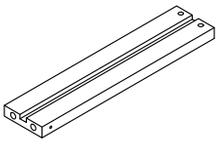	x1

NO.	PARTS	QTY
19	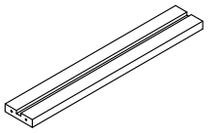	x1
NO.	PARTS	QTY
20	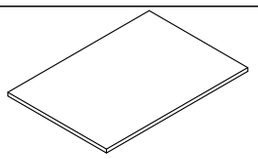	x1
NO.	PARTS	QTY
22	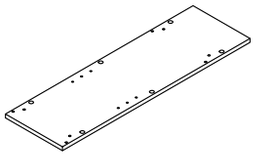	x1
NO.	PARTS	QTY
23	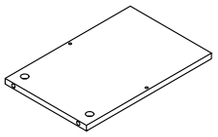	x1
NO.	PARTS	QTY
24	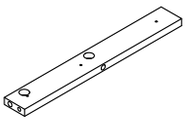	x2
NO.	PARTS	QTY
25	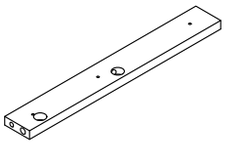	x2
NO.	PARTS	QTY
28	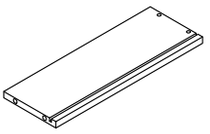	x2

NO.	PARTS	QTY
31	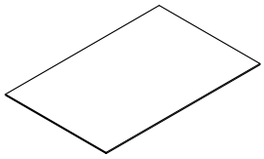	x1
NO.	PARTS	QTY
34	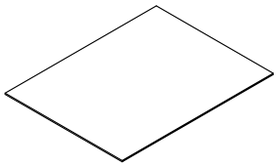	x1

NO.	PARTS	QTY
1	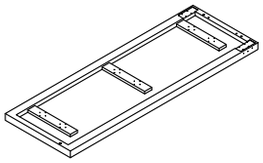	x1
NO.	PARTS	QTY
3	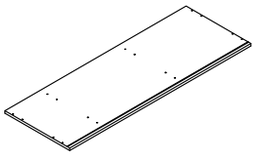	x1
NO.	PARTS	QTY
4	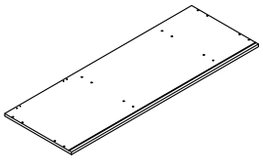	x1
NO.	PARTS	QTY
8	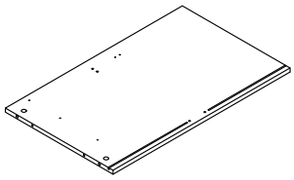	x1
NO.	PARTS	QTY
9	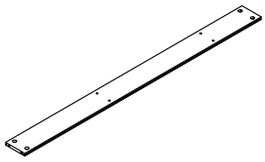	x1
NO.	PARTS	QTY
10	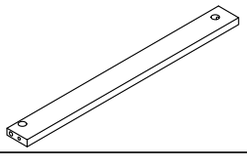	x1
NO.	PARTS	QTY
12	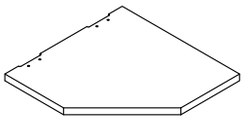	x1

NO.	PARTS	QTY
13	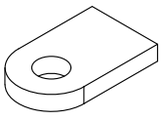	x2
NO.	PARTS	QTY
14	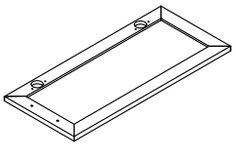	x1
NO.	PARTS	QTY
15	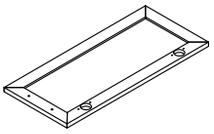	x1
NO.	PARTS	QTY
16	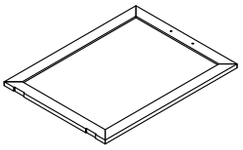	x1
NO.	PARTS	QTY
21	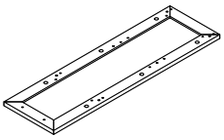	x1
NO.	PARTS	QTY
23	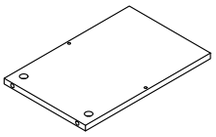	x1
NO.	PARTS	QTY
26	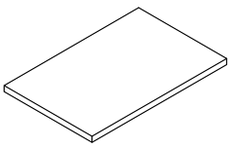	x1

NO.	PARTS	QTY
27	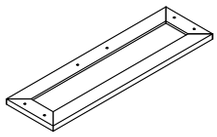	x1

NO.	PARTS	QTY
29	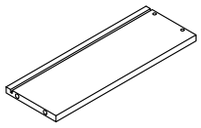	x2

NO.	PARTS	QTY
30	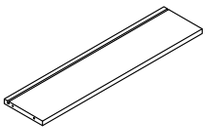	x1

NO.	PARTS	QTY
32	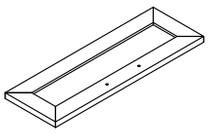	x1

NO.	PARTS	QTY
33	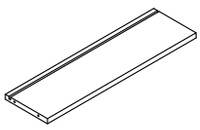	x1

NO.	PARTS	QTY
35	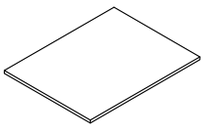	x1

NO.	PARTS	QTY
36	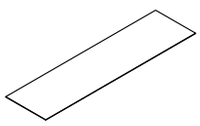	x2

NO.	PARTS	QTY
37	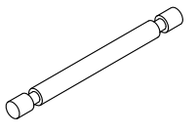	x1

Hardware:

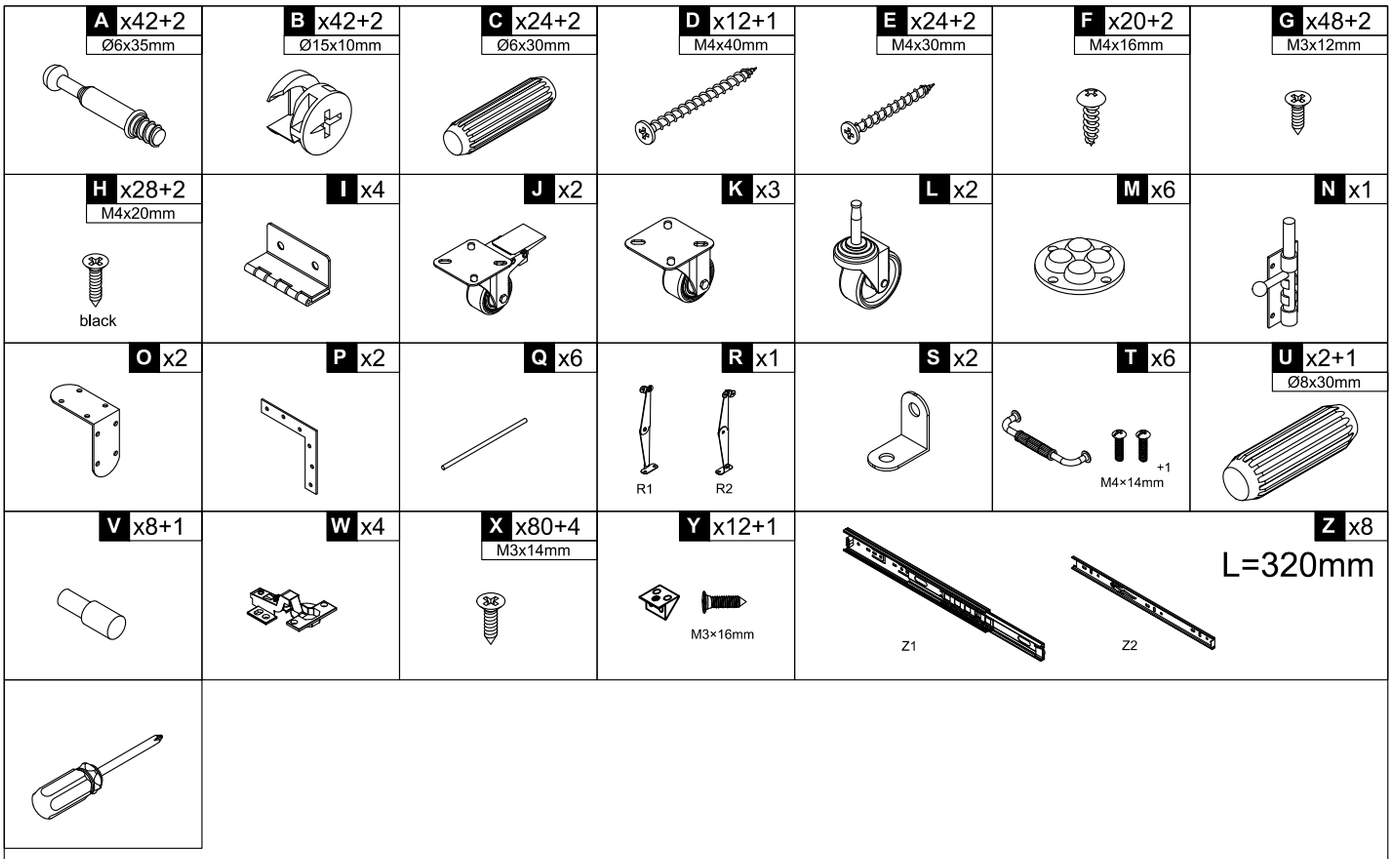
A x42+2
Ø6x35mm
B x42+2
Ø15x10mm
C x24+2
Ø6x30mm
D x12+1
M4x40mm
E x24+2
M4x30mm
F x20+2
M4x16mm
G x48+2
M3x12mm
H x28+2
M4x20mm
black
I x4
J x2
K x3
L x2
M x6
N x1
O x2
P x2
Q x6
R x1
R1
R2
S x2
T x6
M4×14mm
+1
U x2+1
Ø8x30mm
V x8+1
W x4
X x80+4
M3x14mm
Y x12+1
M3×16mm
Z x8
L=320mm
Z1
Z2

Assembly Steps

1

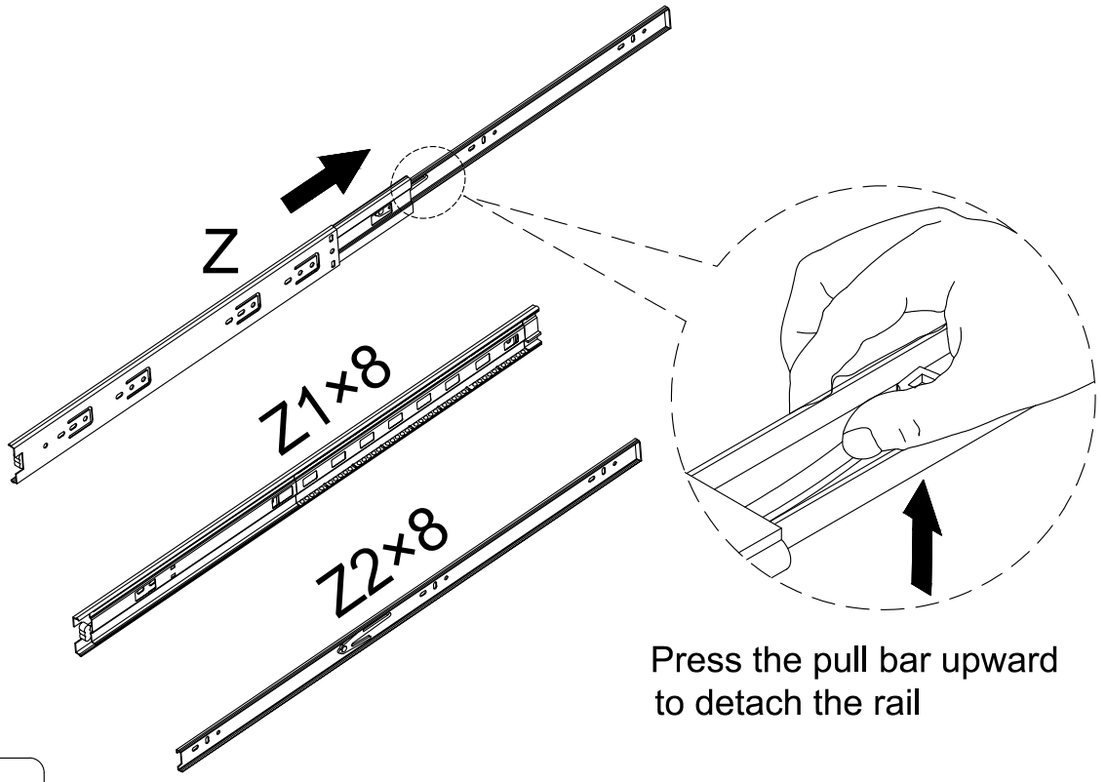

Press the pull bar upward
to detach the rail

Z x8

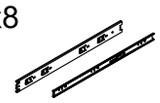

2

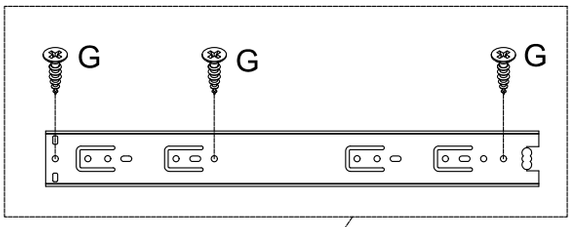

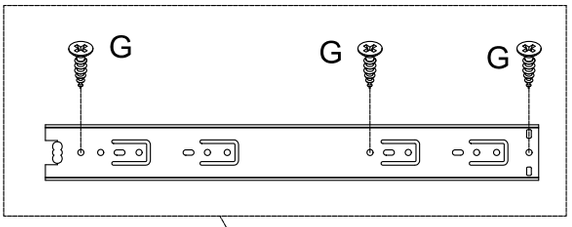

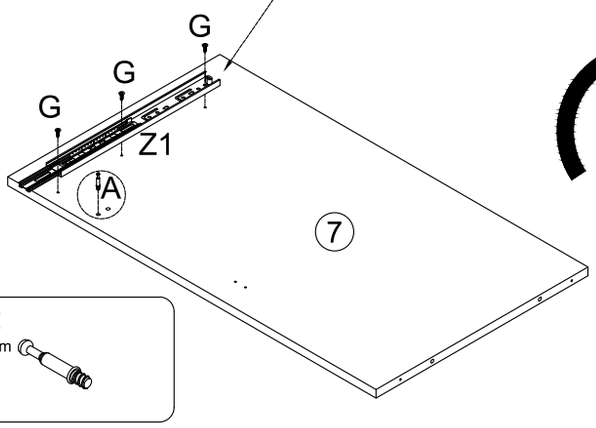

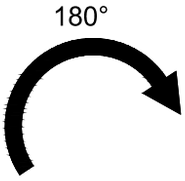

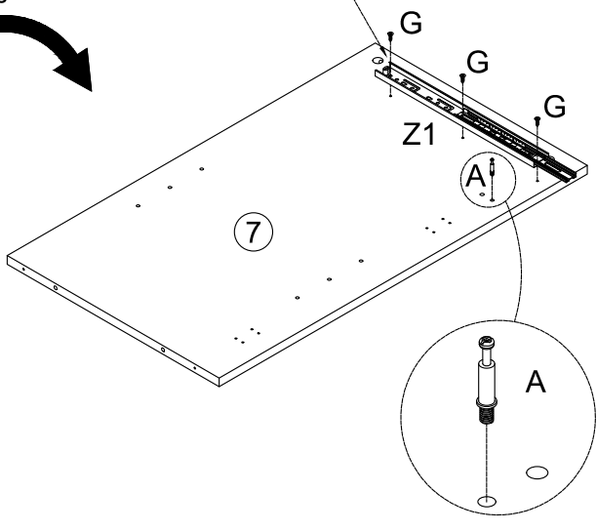

A x2
Ø6x35mm

G x6
M3x12mm

Z1 x2

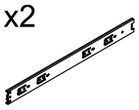

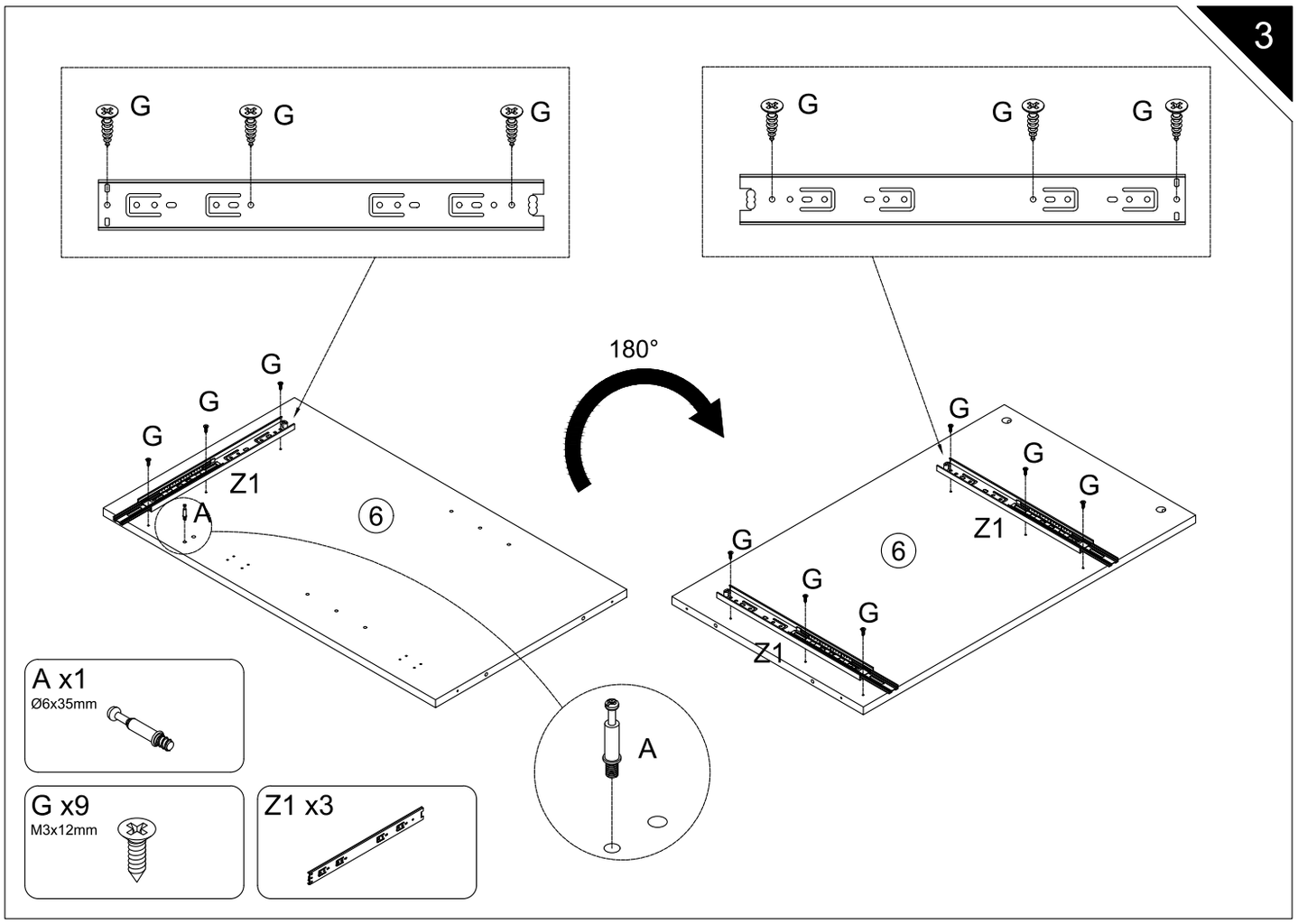
3
G
G
G
G
G
G
G
G
G
G
G
G
G
G
G
G
Z1
Z1
Z1
Z1
A
6
6
180°
A
A x1
Ø6x35mm
G x9
M3x12mm
Z1 x3

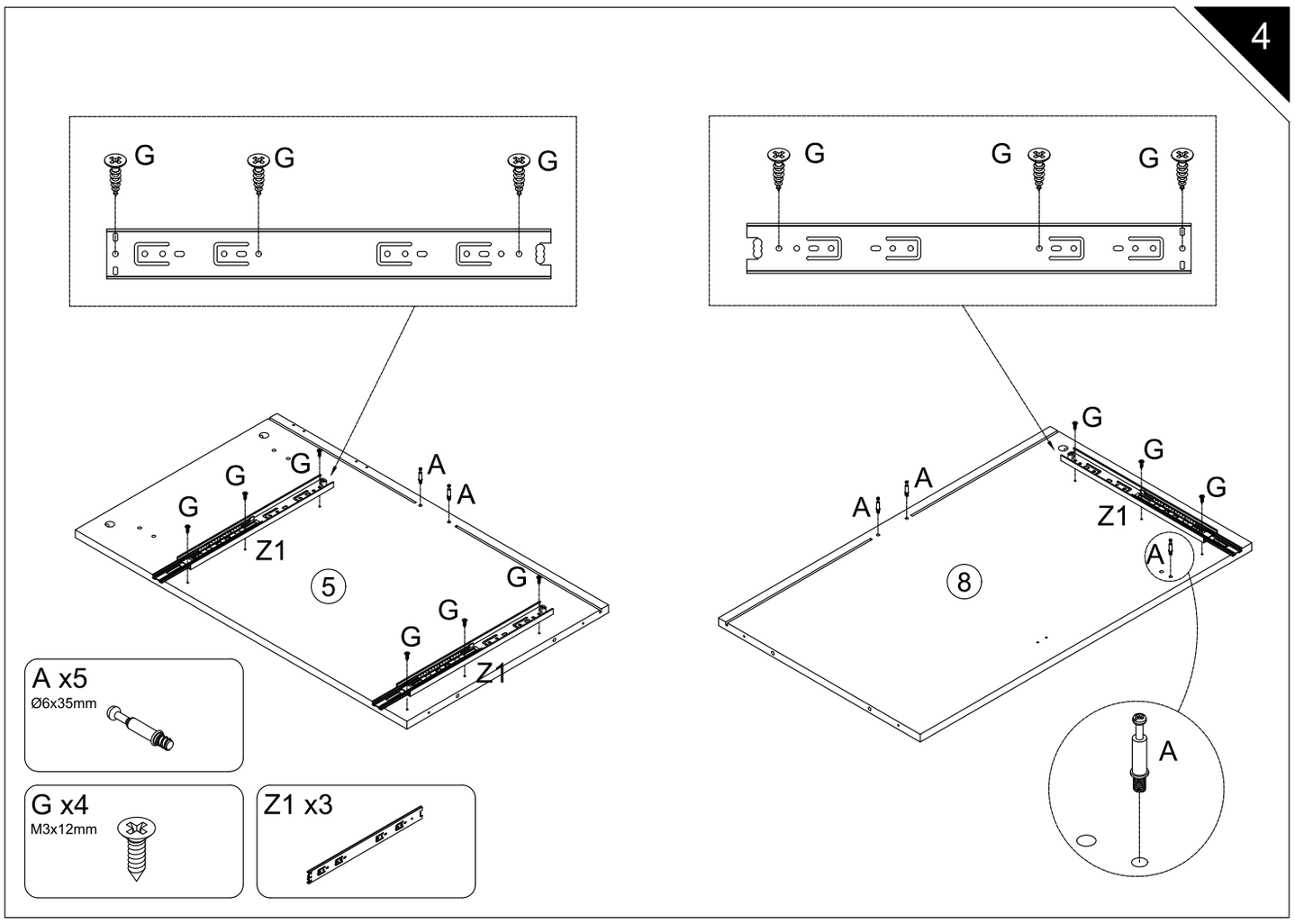
4
G
G
G
G
G
G
G
G
G
G
G
G
G
G
G
G
Z1
Z1
Z1
Z1
A
A
A
A
A
5
8
A
A x5
Ø6x35mm
G x4
M3x12mm
Z1 x3

5

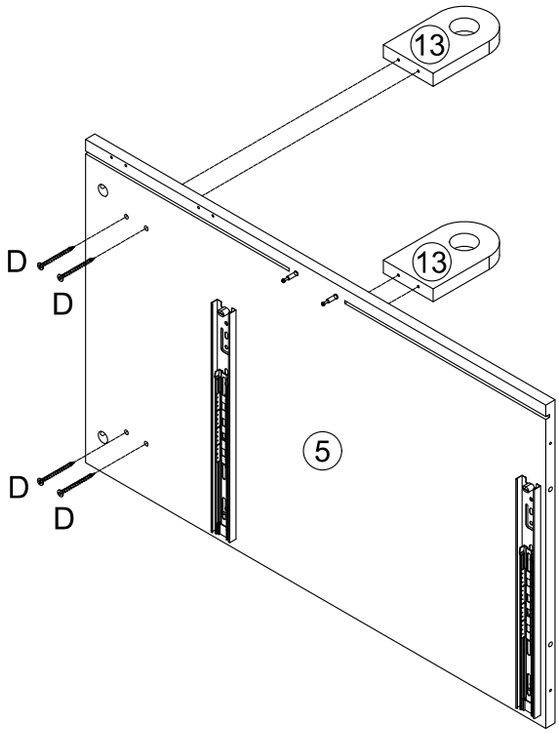

D x4
M4x40mm

6

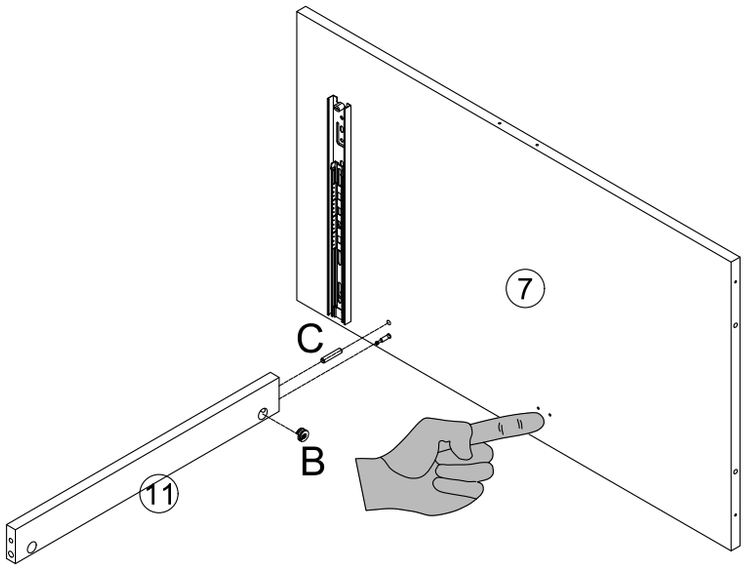

B x1
Ø15x10mm

C x1
Ø6x30mm

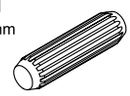

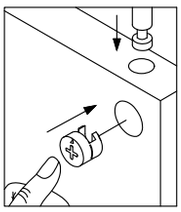

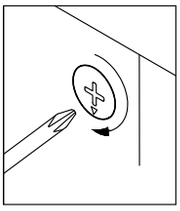

7

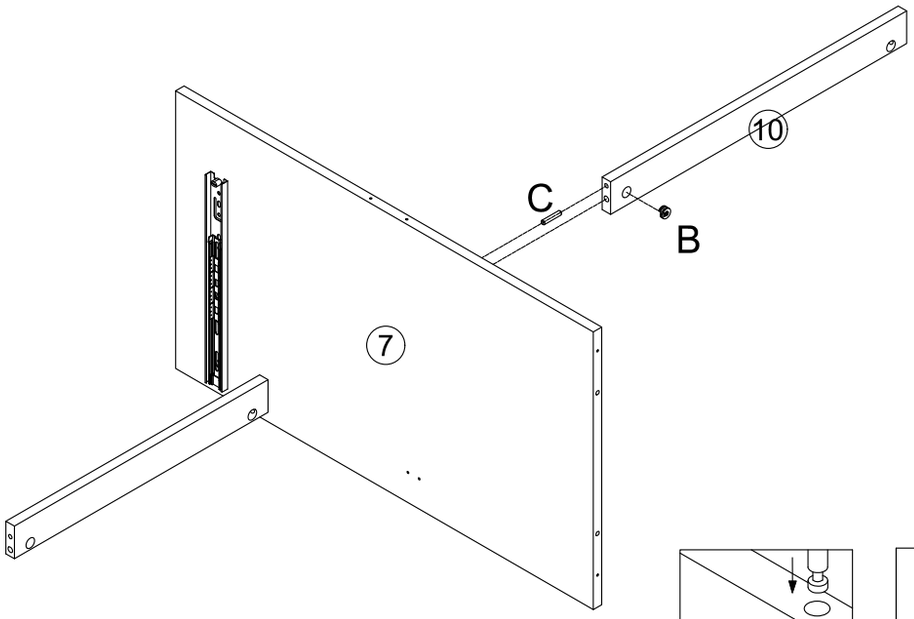

B x1
Ø15x10mm

C x1
Ø6x30mm

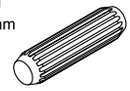

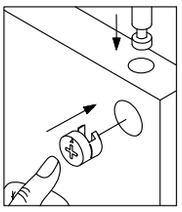

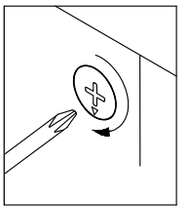

8

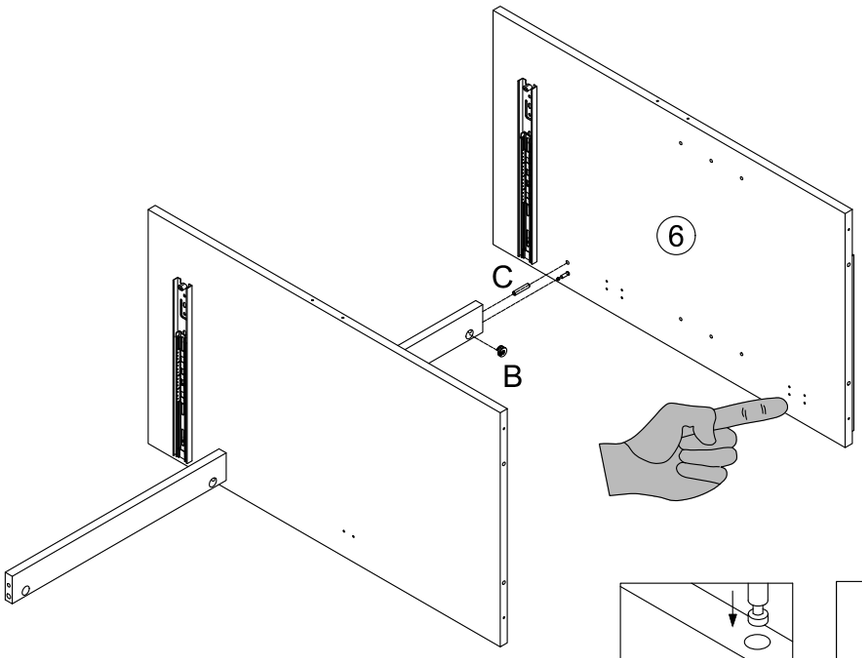

B x1
Ø15x10mm

C x1
Ø6x30mm

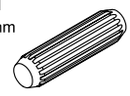

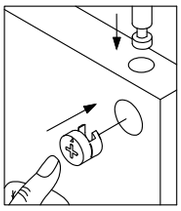

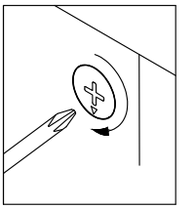

9

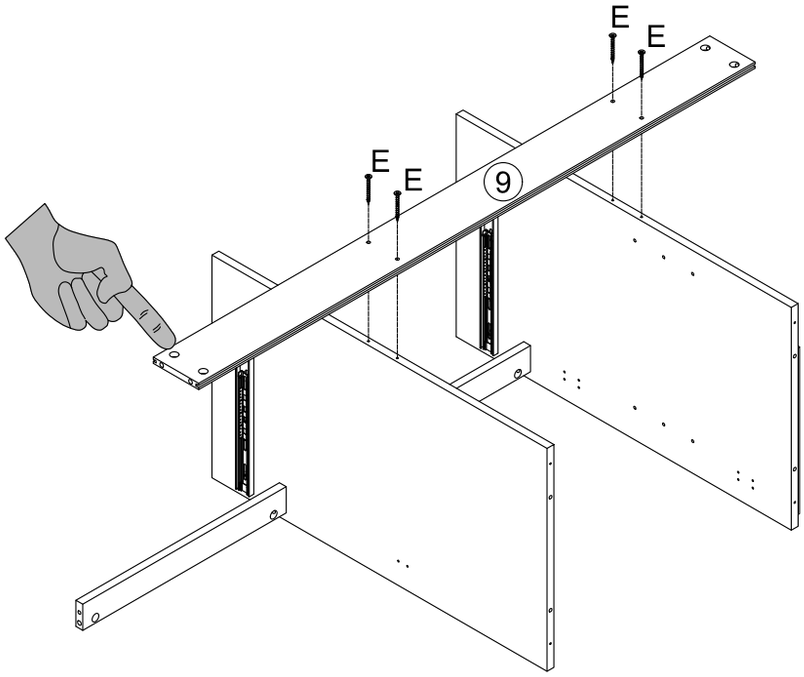

E x4
M4x30mm

10

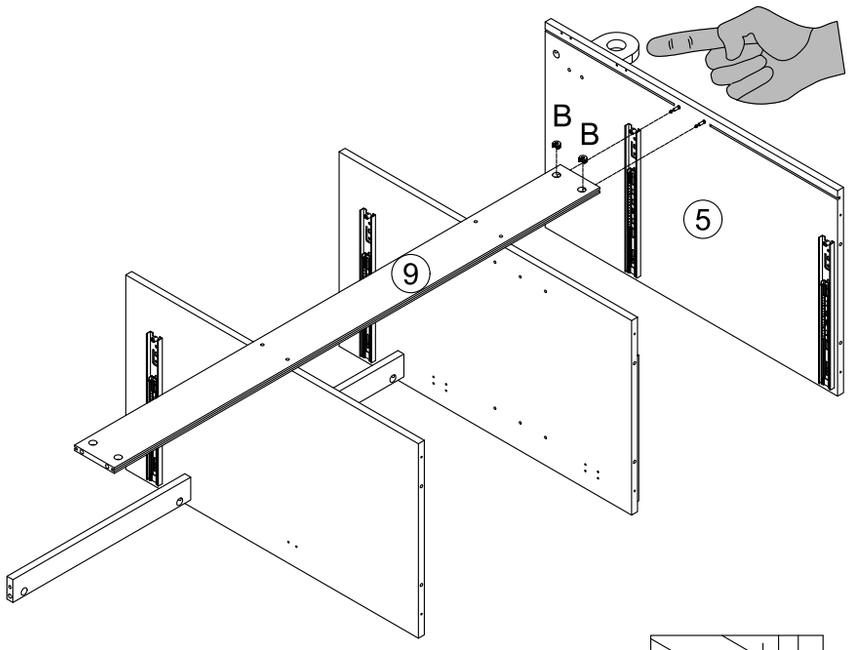

B x2
Ø15x10mm

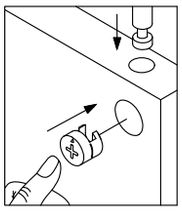

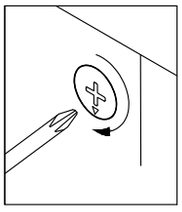

11

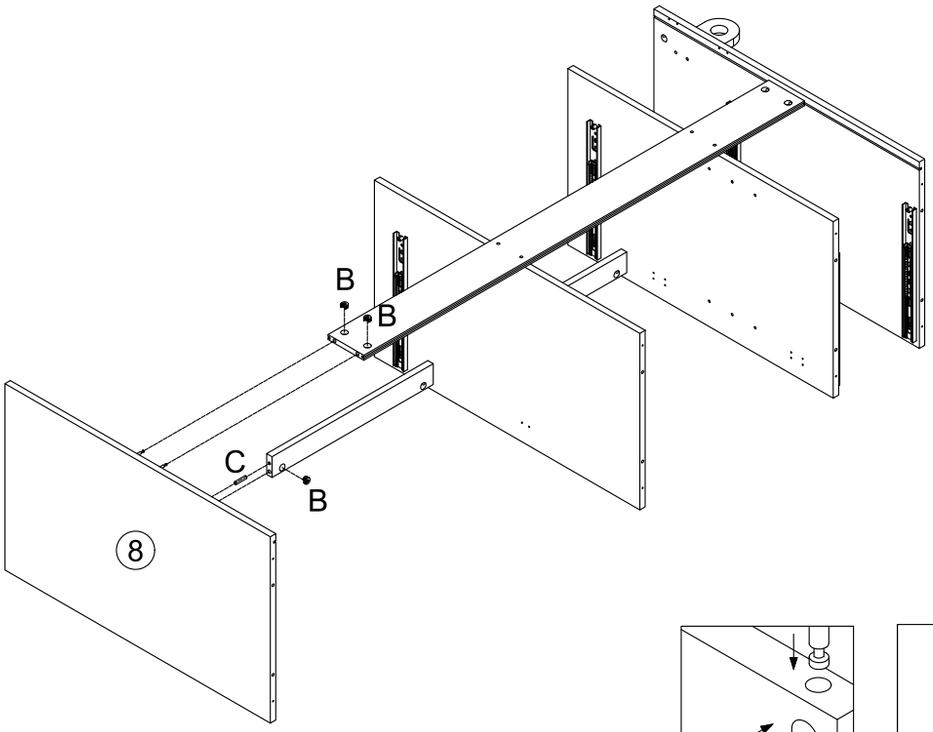

B x3
Ø15x10mm

C x1
Ø6x30mm

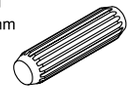

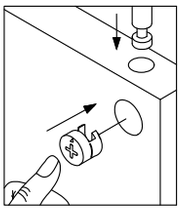

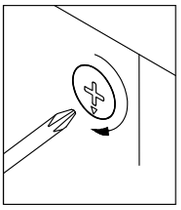

12

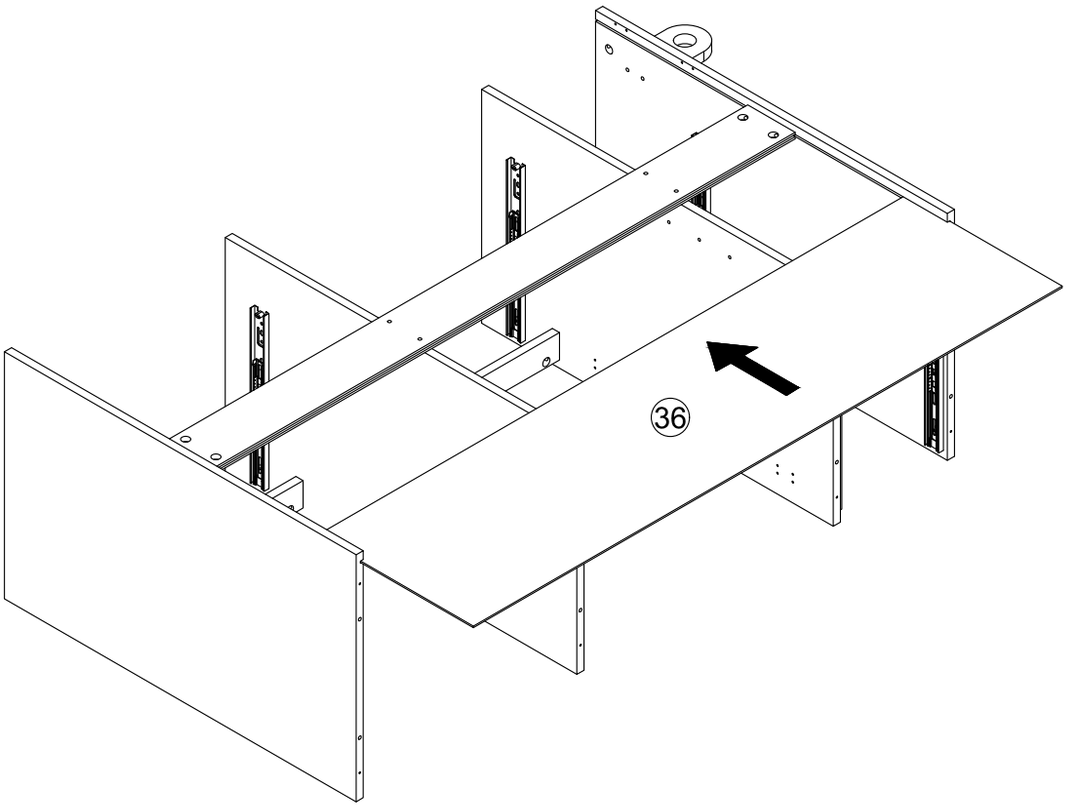

13

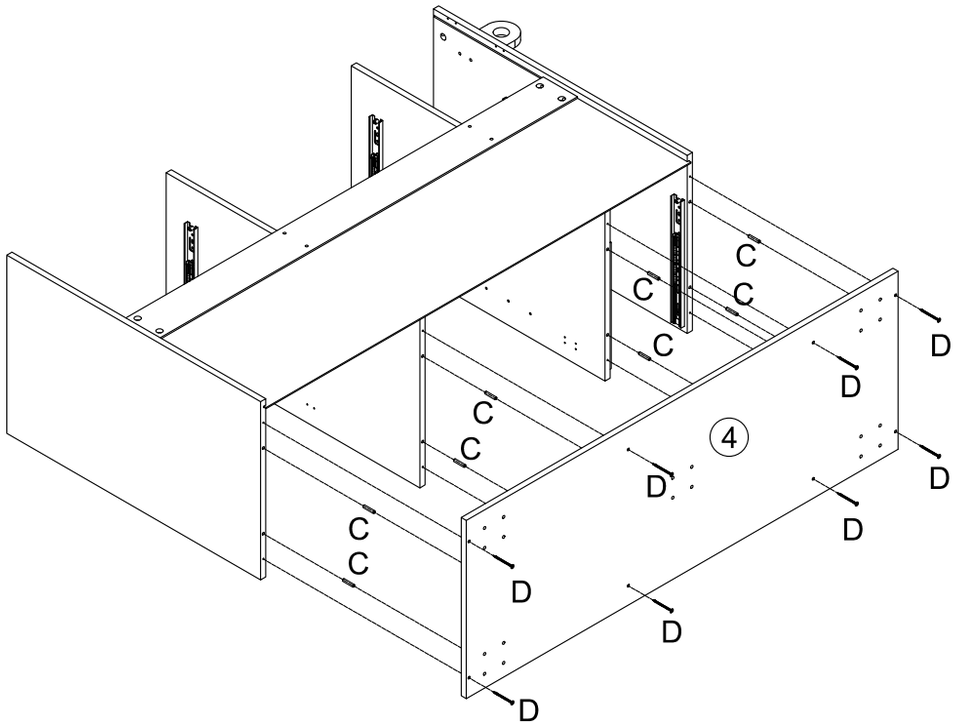

C x8
Ø6x30mm

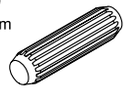

D x8
M4x40mm

14

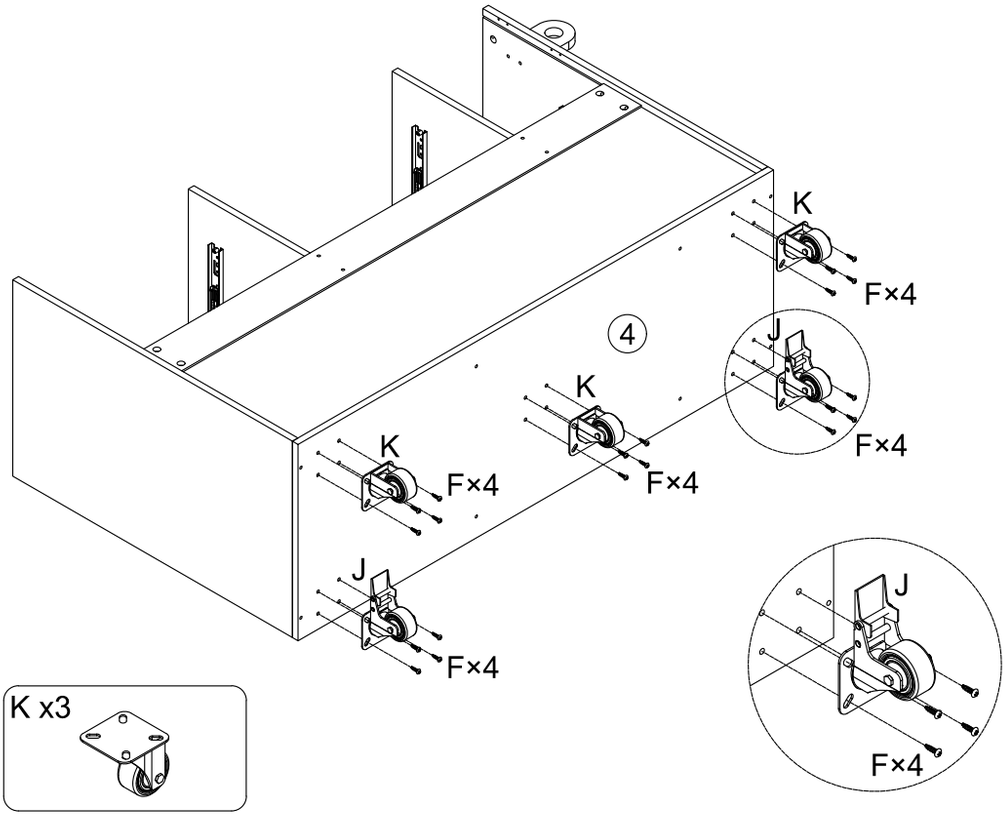

F x20
M4x16mm

J x2

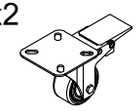

K x3

15

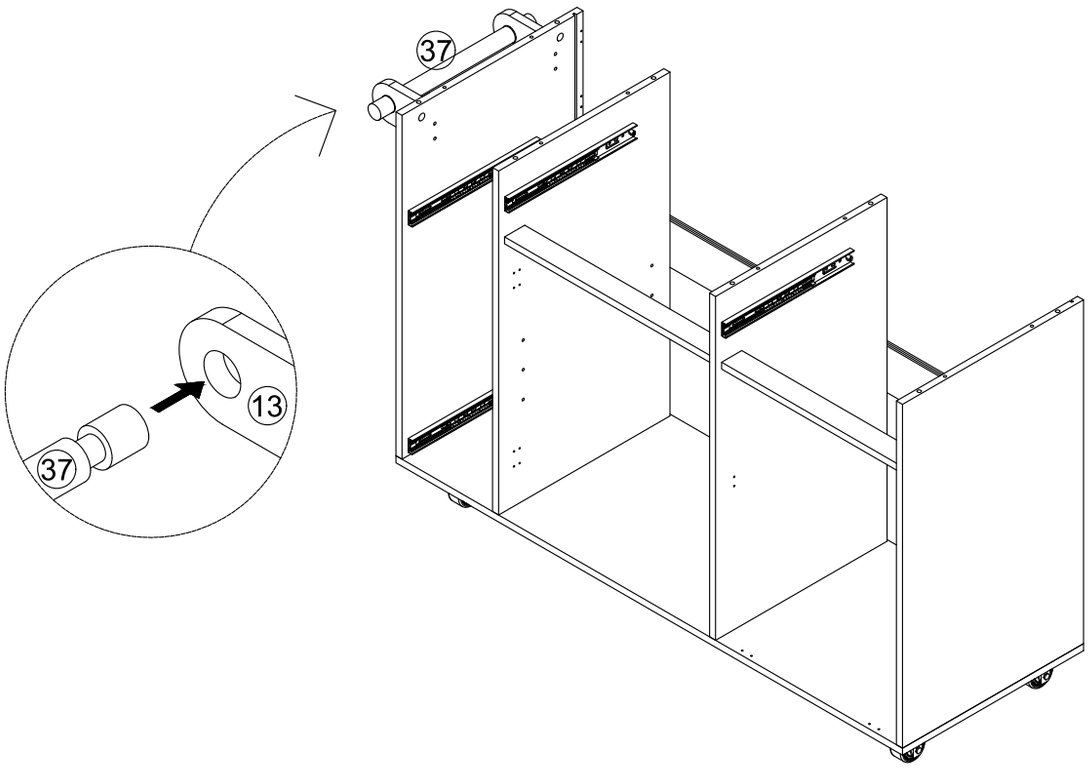

16

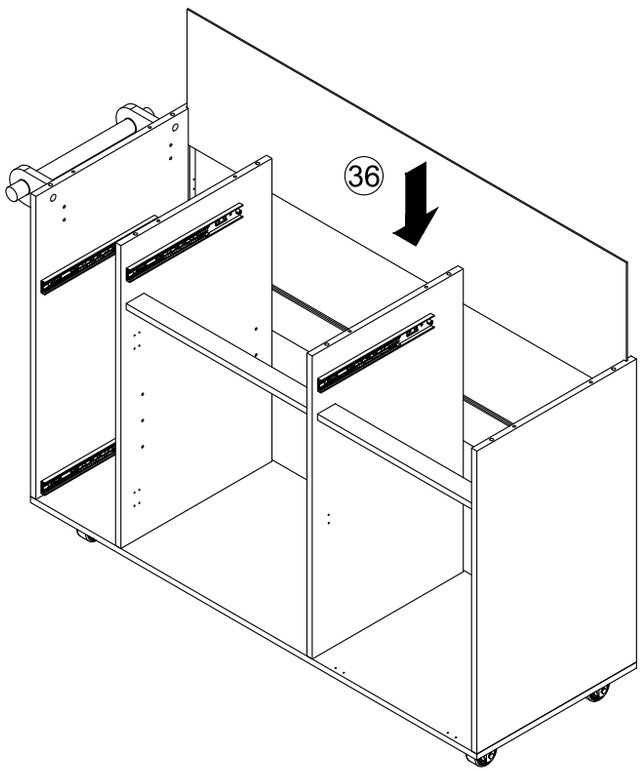

17

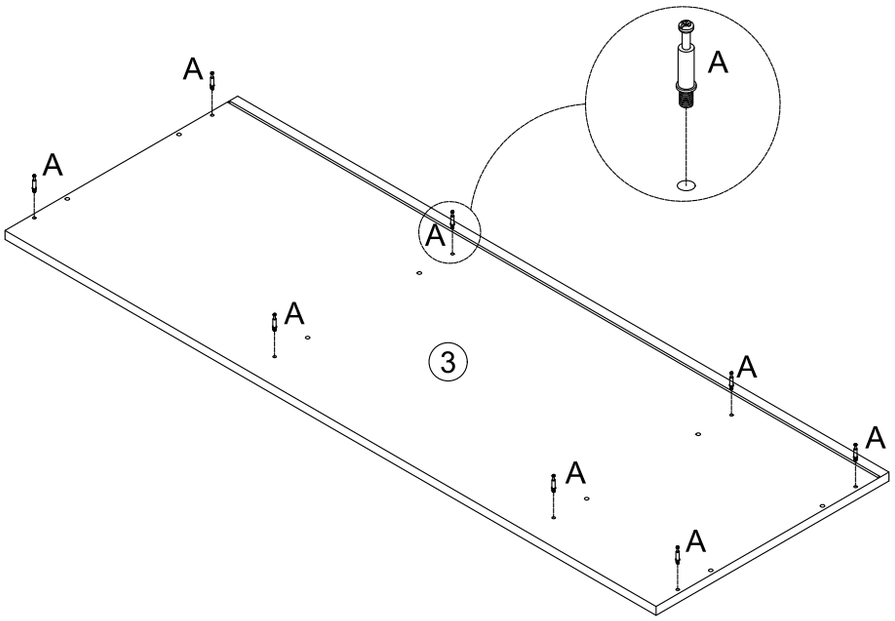

A x8
Ø6x35mm

18

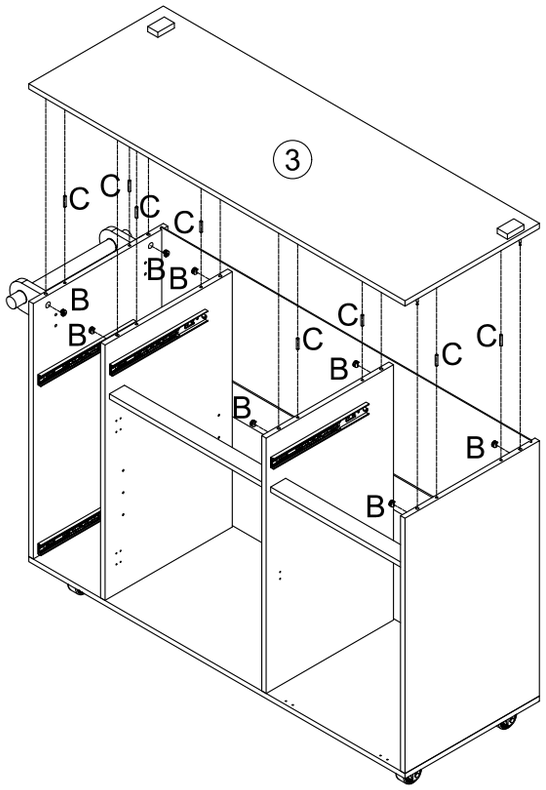

B x8
Ø15x10mm

C x8
Ø6x30mm

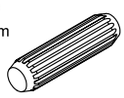

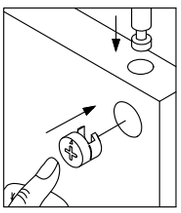

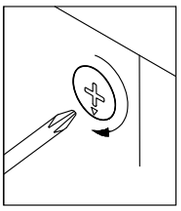

19

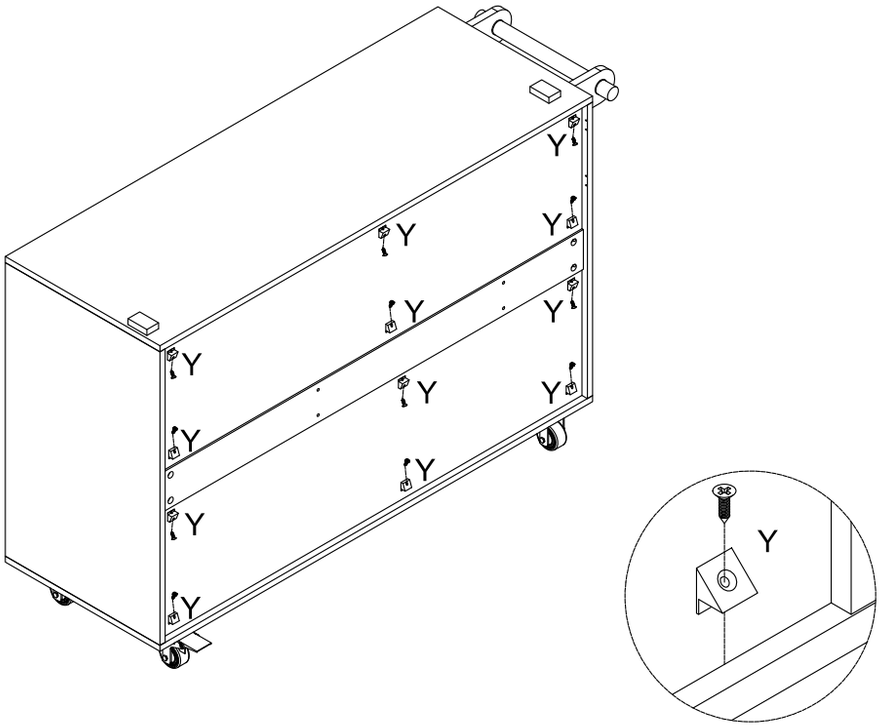

Y x12

M3×16mm

20

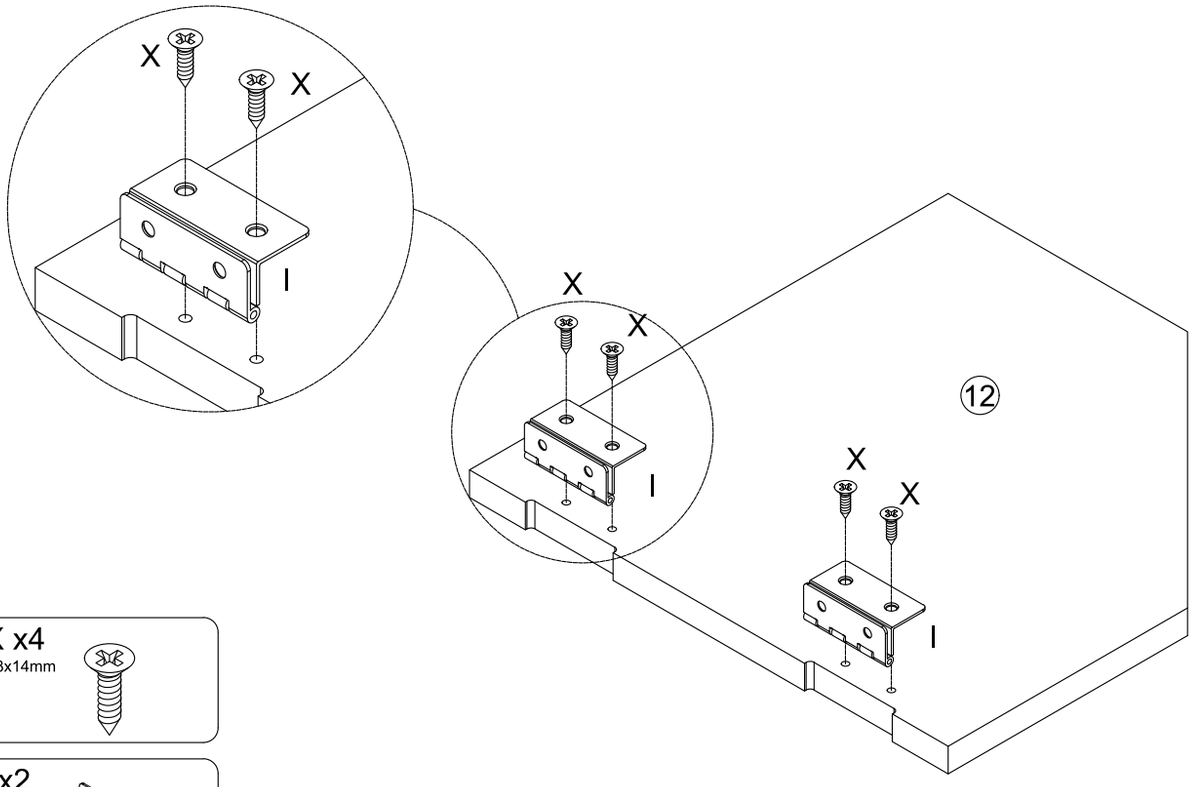

X x4

M3x14mm

I x2

21

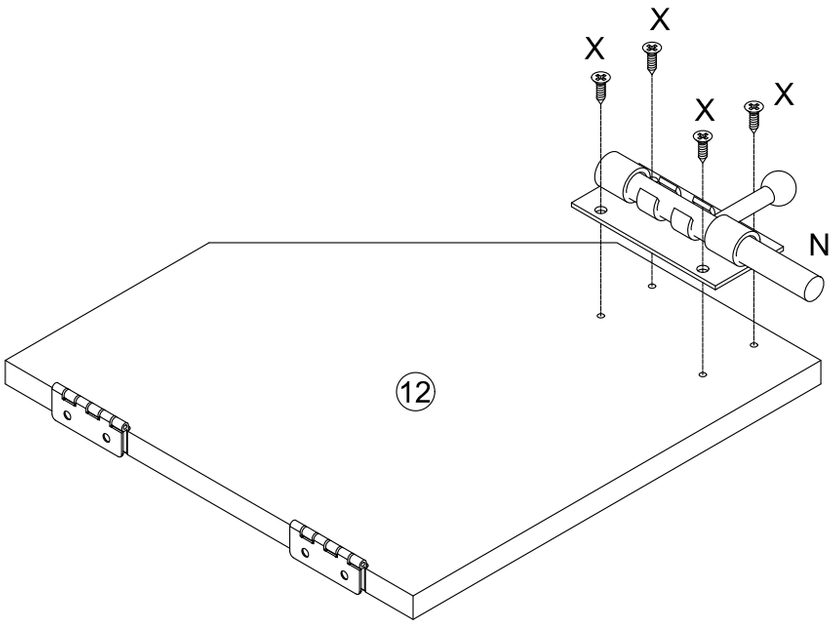

X x4
M3x14mm

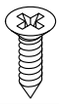

N x1

22

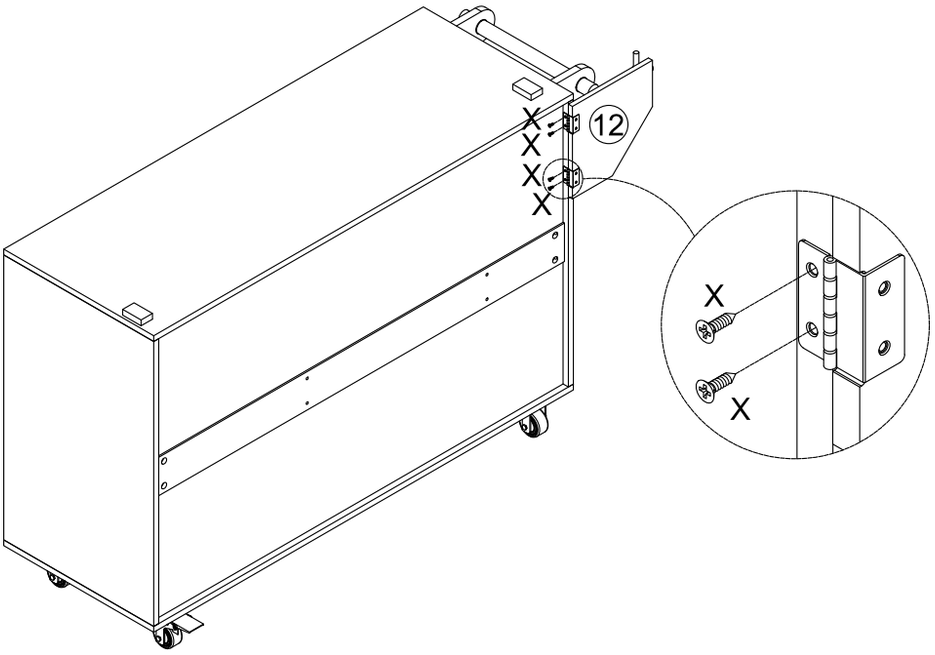

X x4
M3x14mm

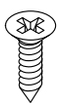

23

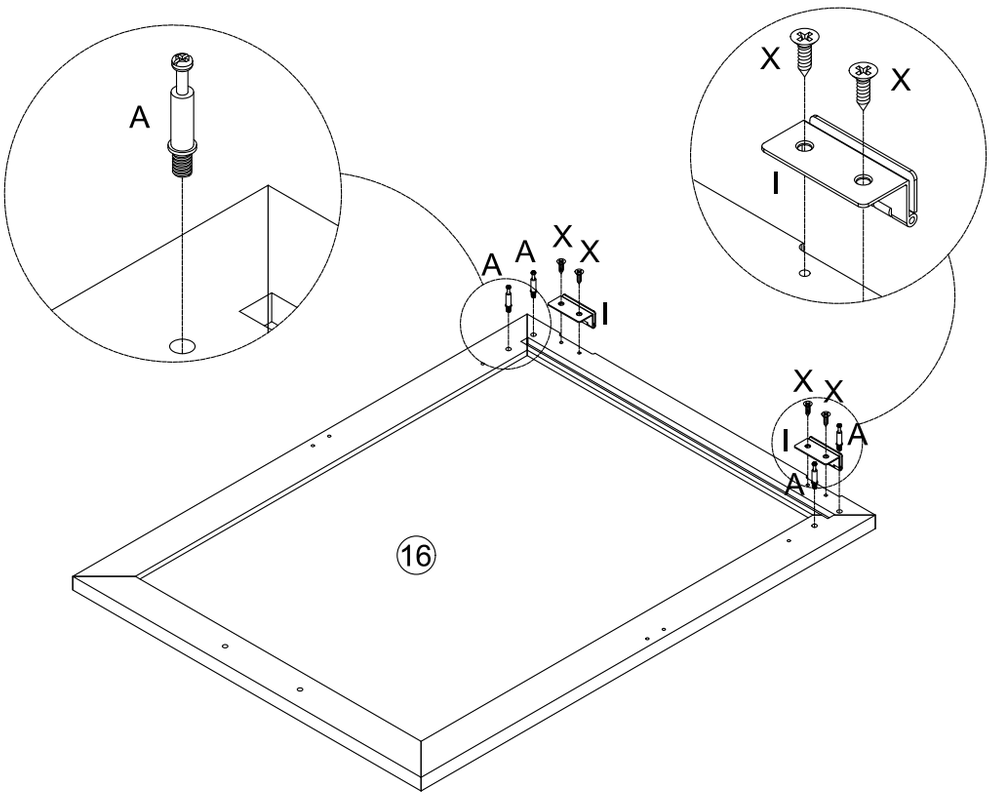

A x4
Ø6x35mm

X x4
M3x14mm

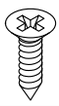

I x2

24

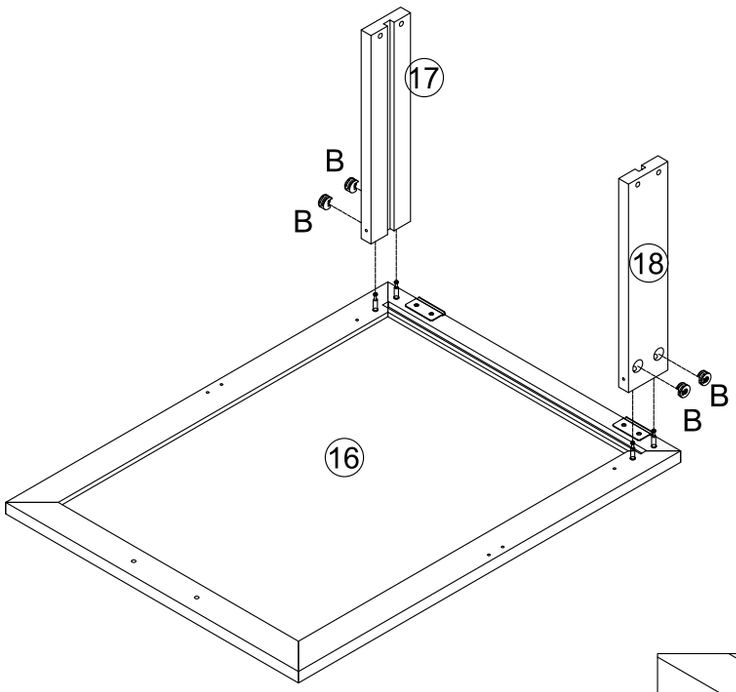

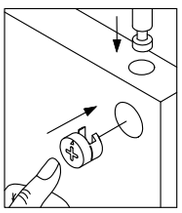

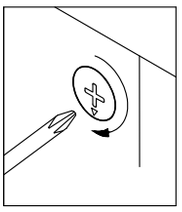

B x4
Ø15x10mm

25

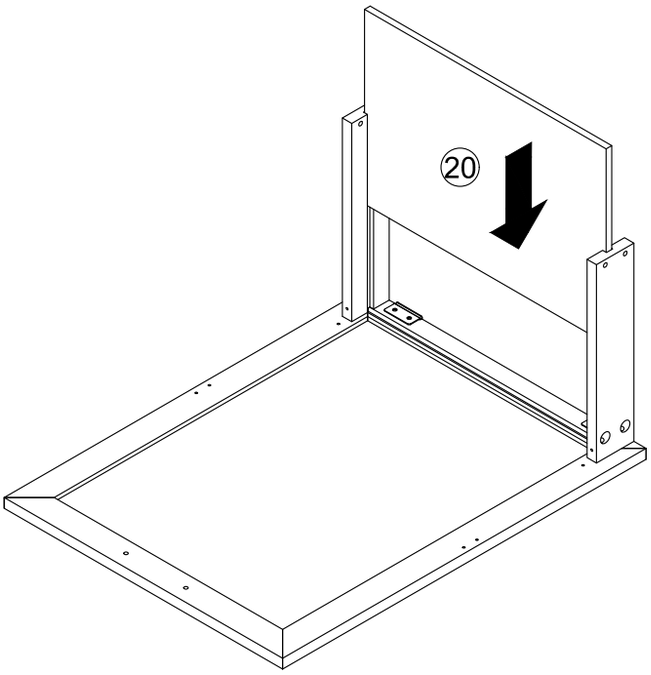

26

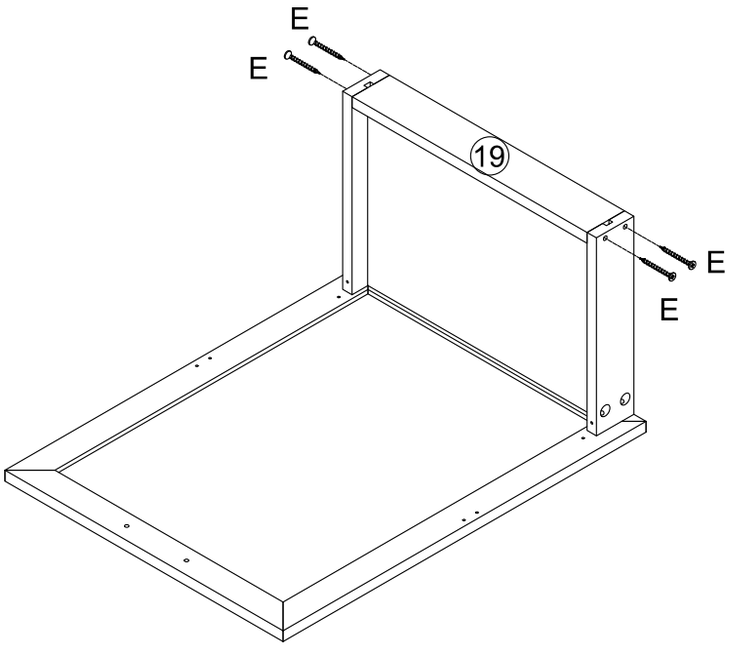

E x4
M4x30mm

27

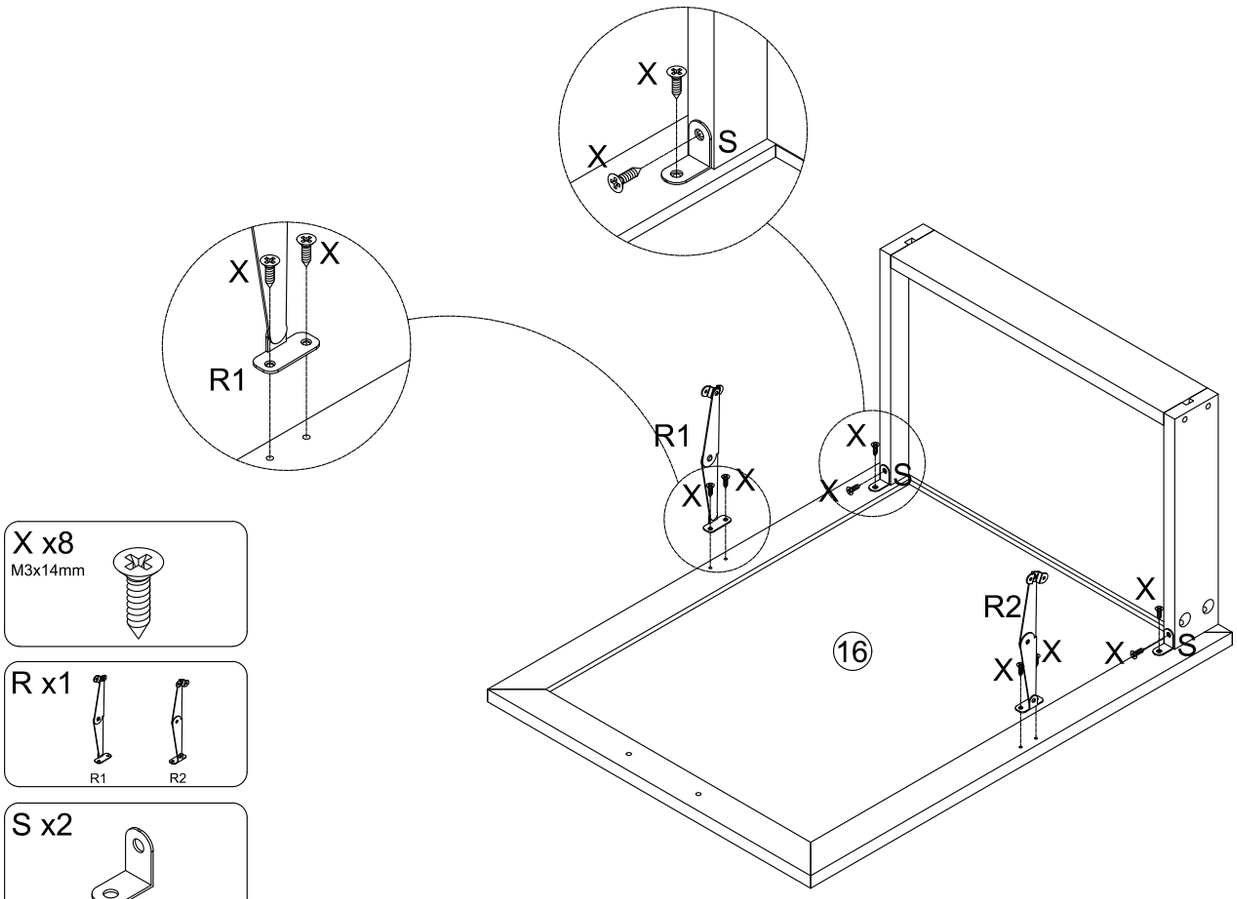

28

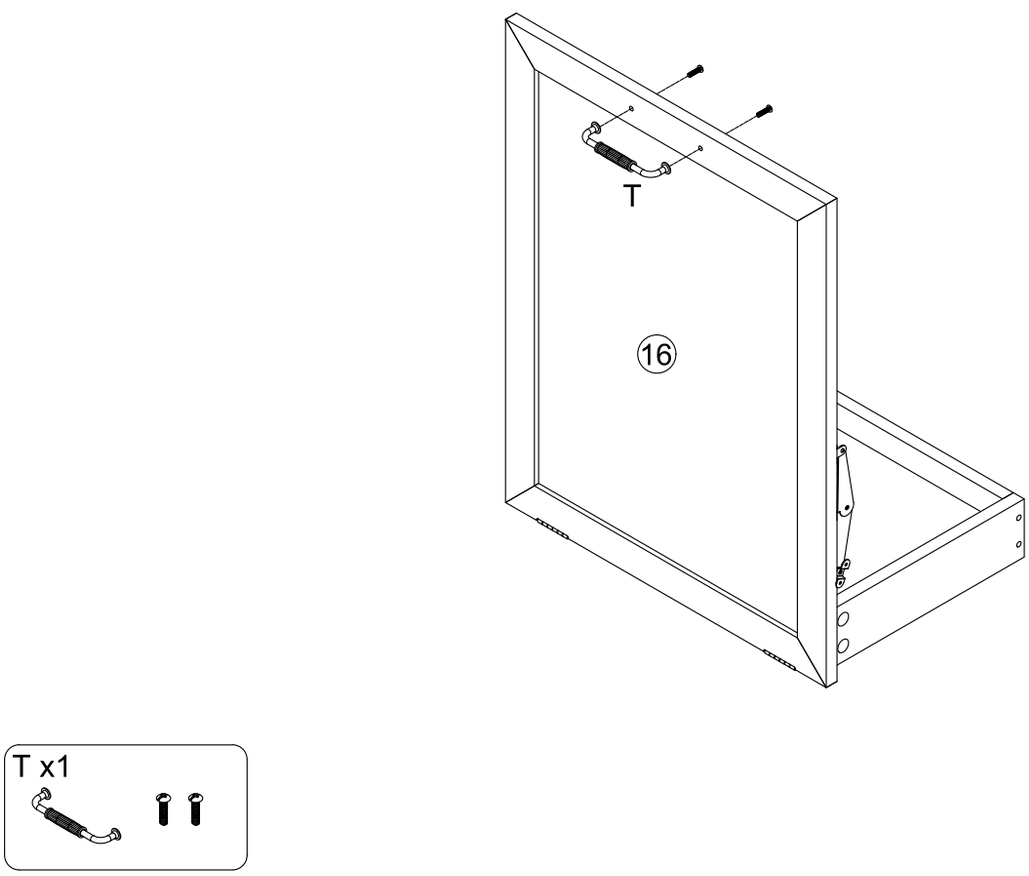

29

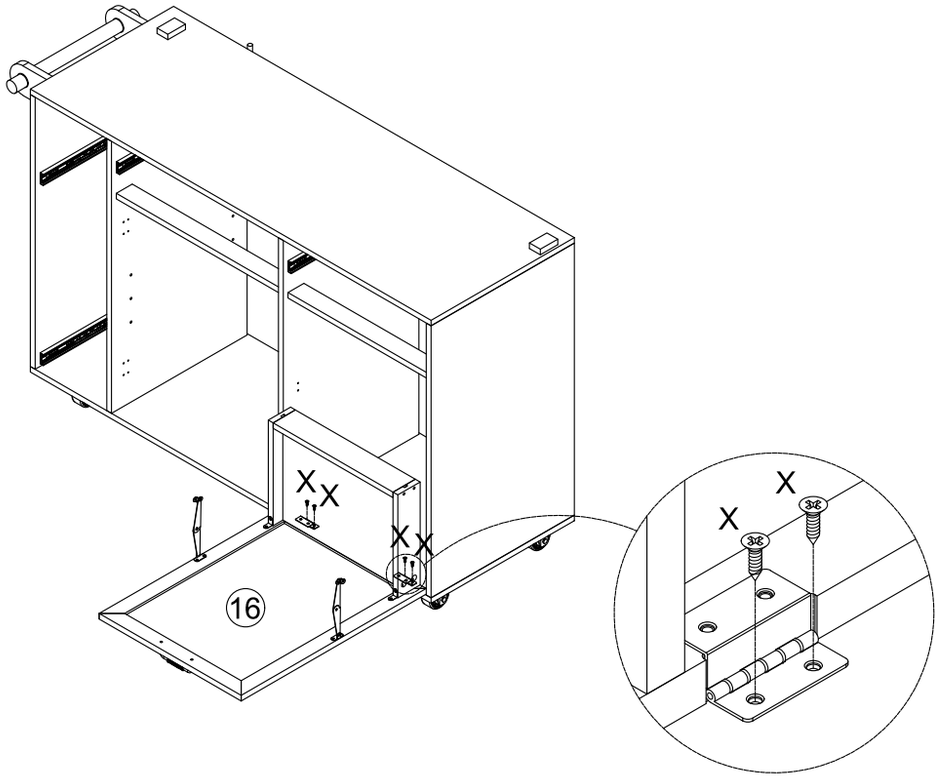

X x4
M3x14mm

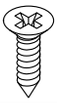

30

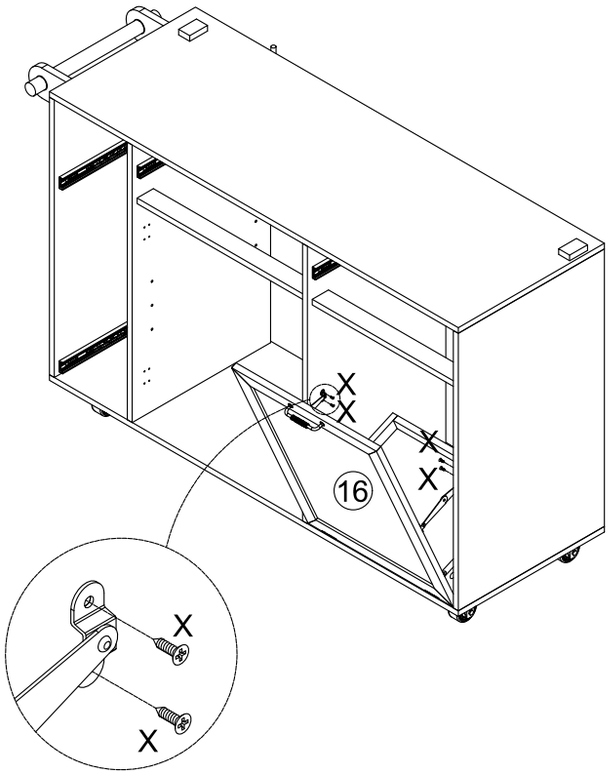

X x4
M3x14mm

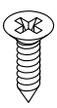

31

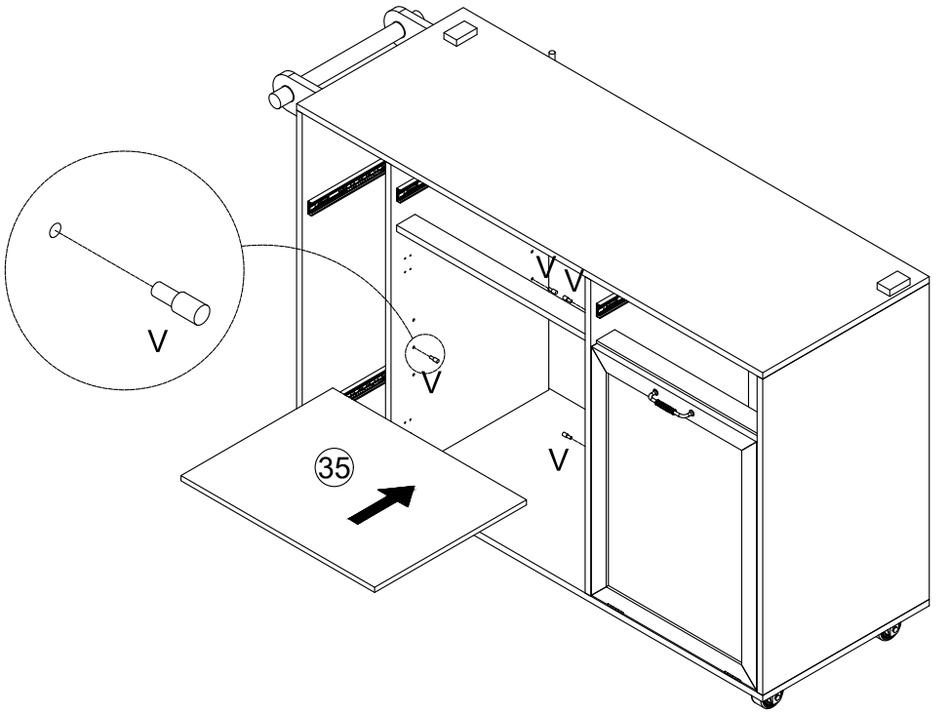

V x4

32

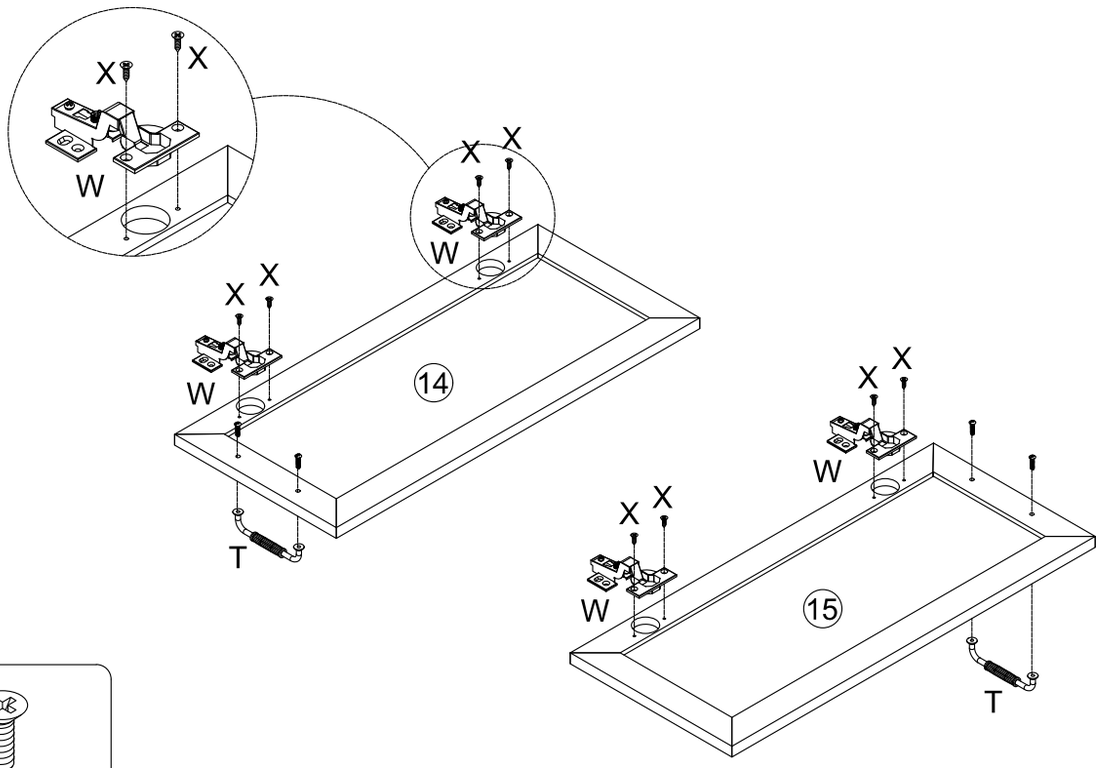

X x8
M3x14mm

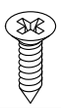

T x2

W x4

33

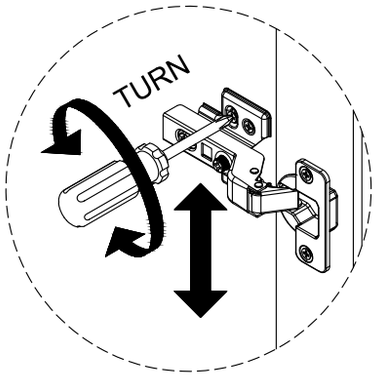

Loosen this screw and push up/down for a slight up-down adjustment of the door.

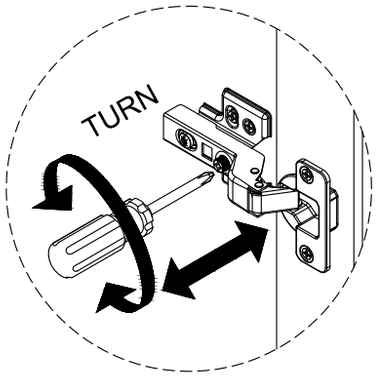

Loosen this screw for a slight left-right adjustment of the door.

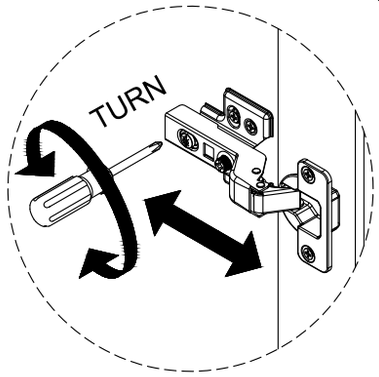

Loosen this screw and push forward/backward for a slight front-back adjustment of the door.

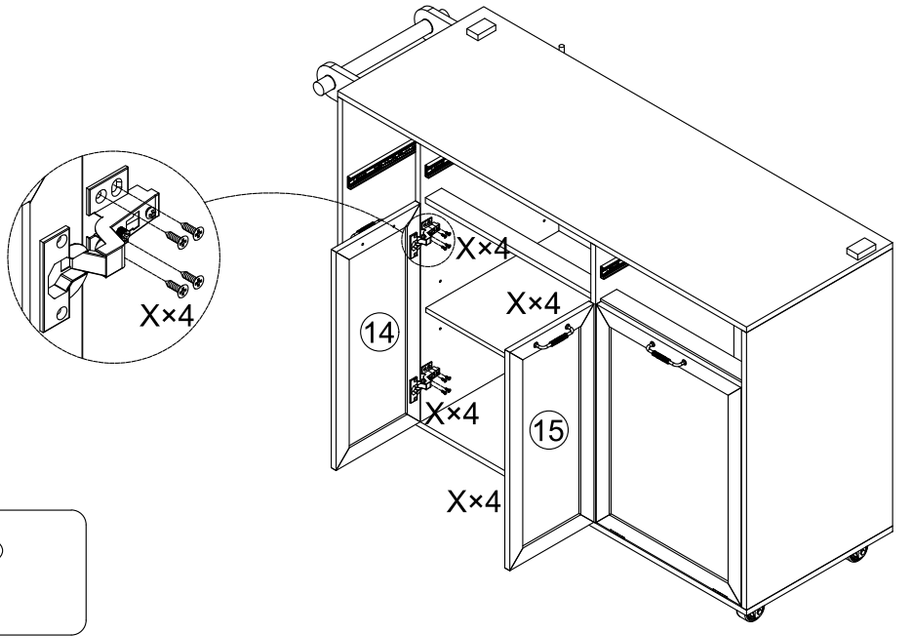

X x16
M3x14mm

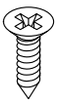

34

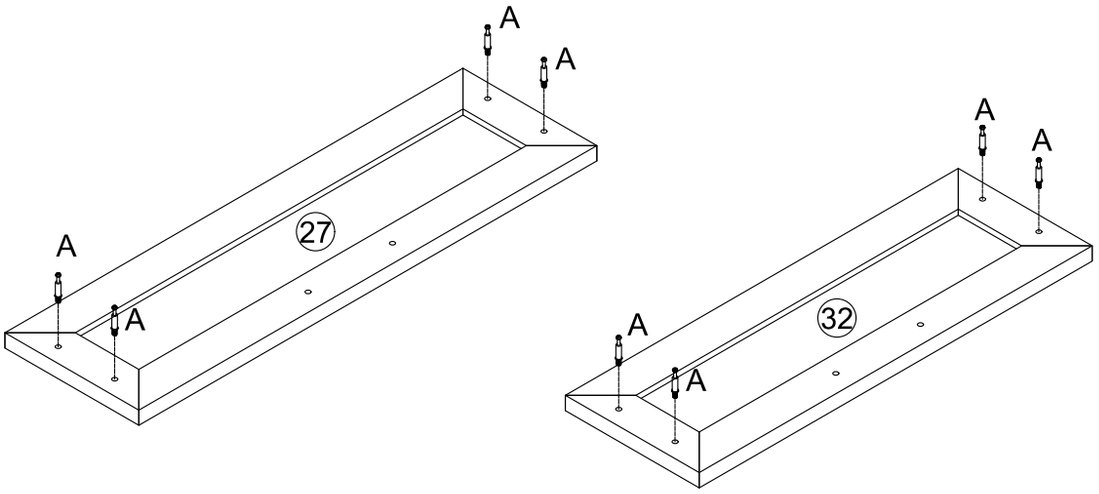

A x8
Ø6x35mm

35

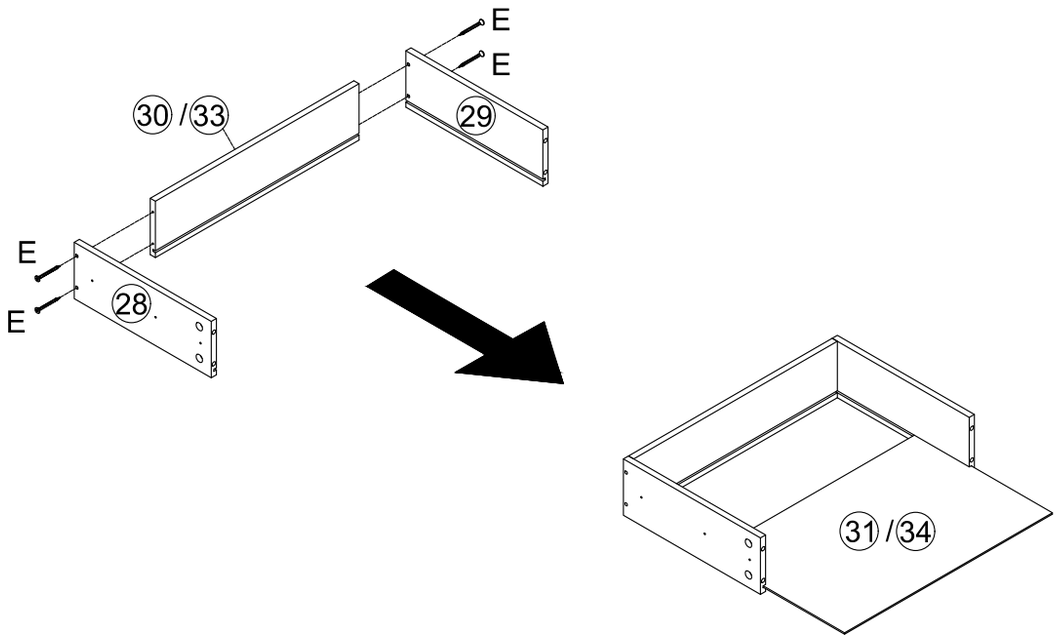

x2

E x8
M4x30mm

36

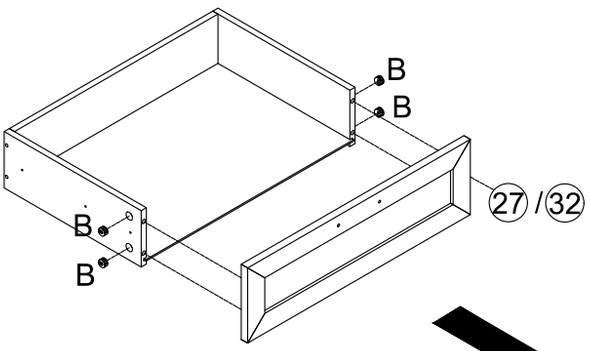

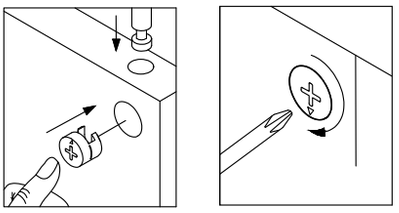

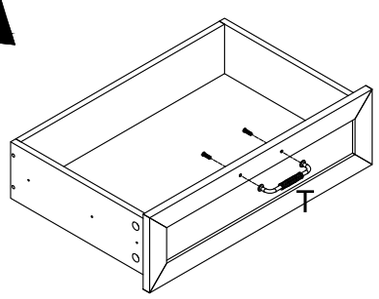

x2

B x8
Ø15x10mm

T x2

37

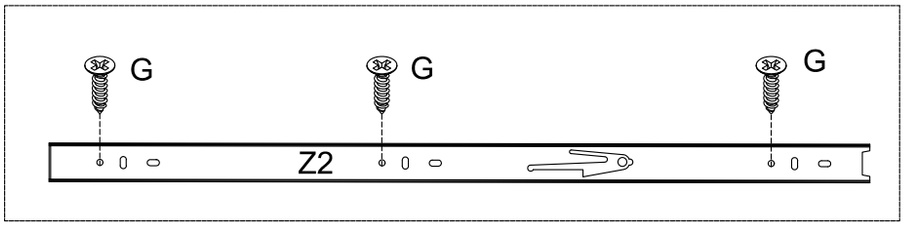

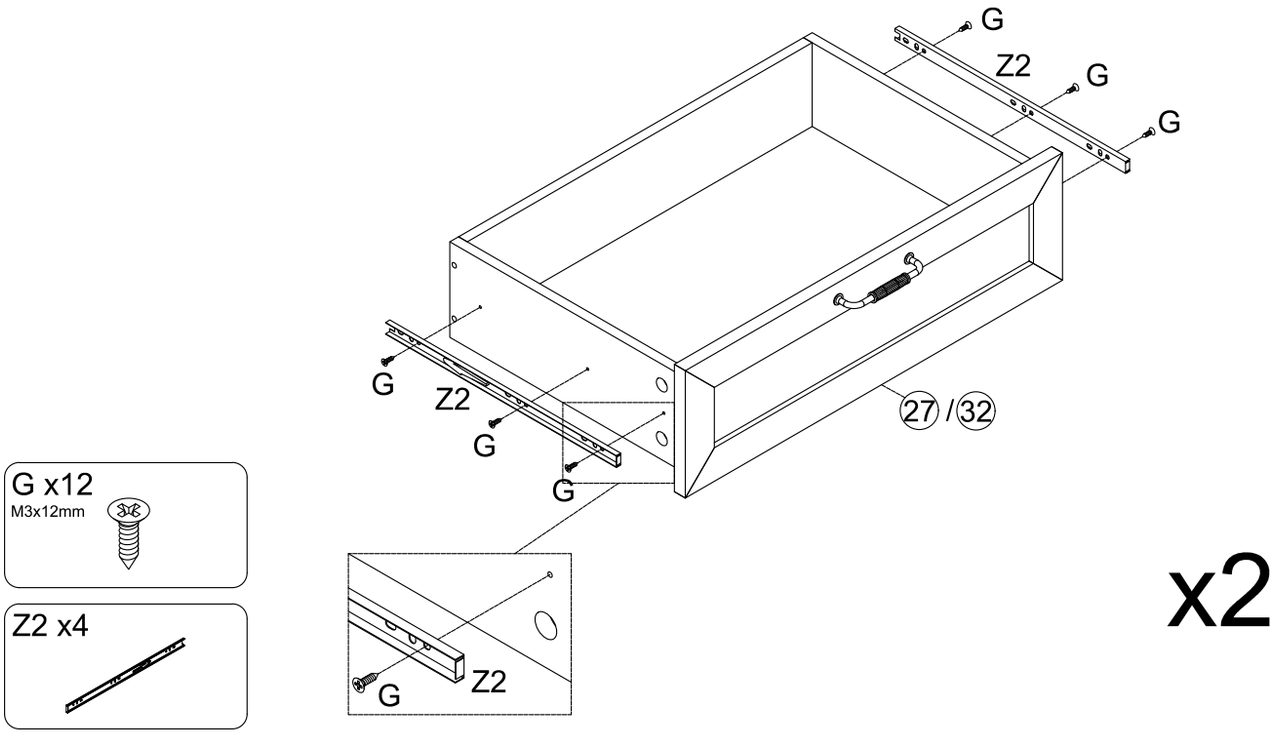

38

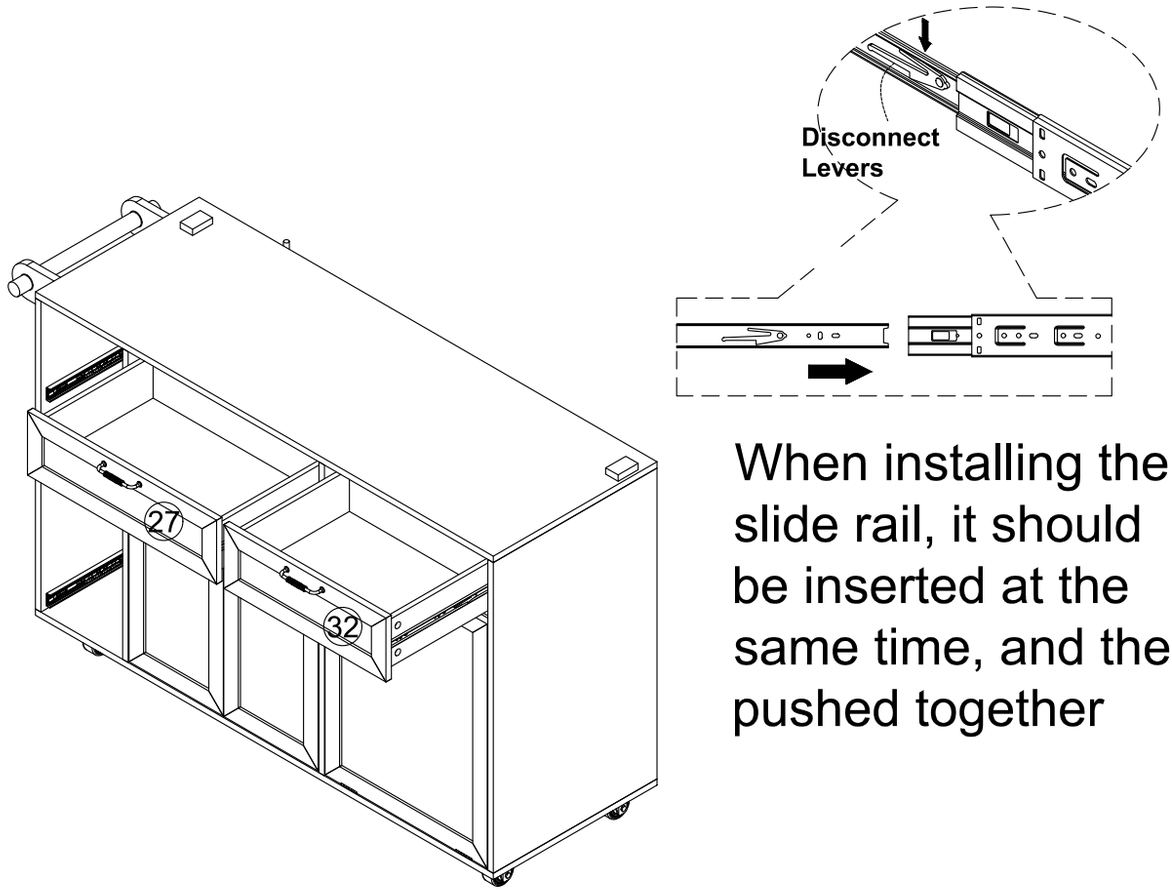

When installing the slide rail, it should be inserted at the same time, and then pushed together

39

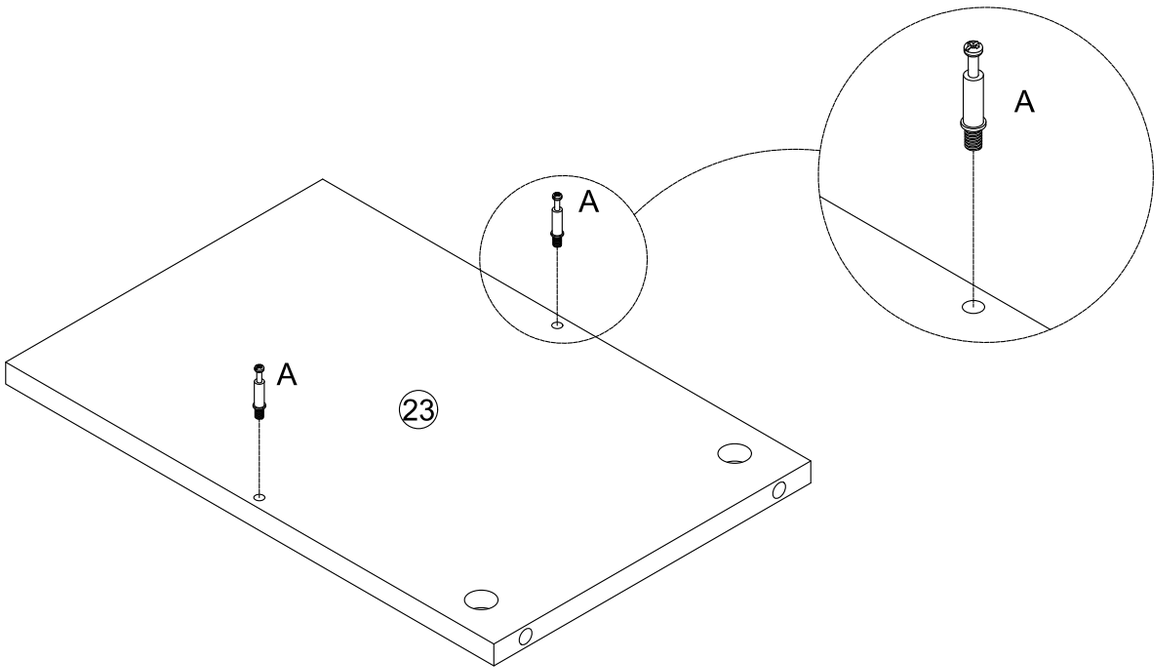

x2

A x4
Ø6x35mm

40

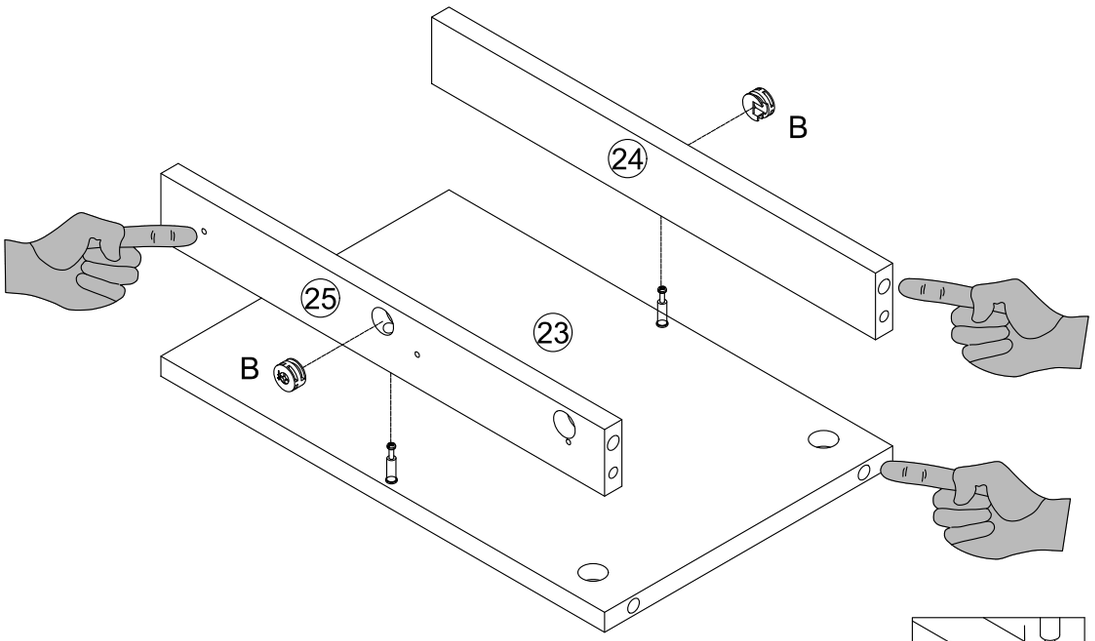

x2

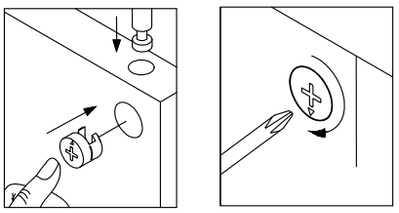

B x4
Ø15x10mm

41

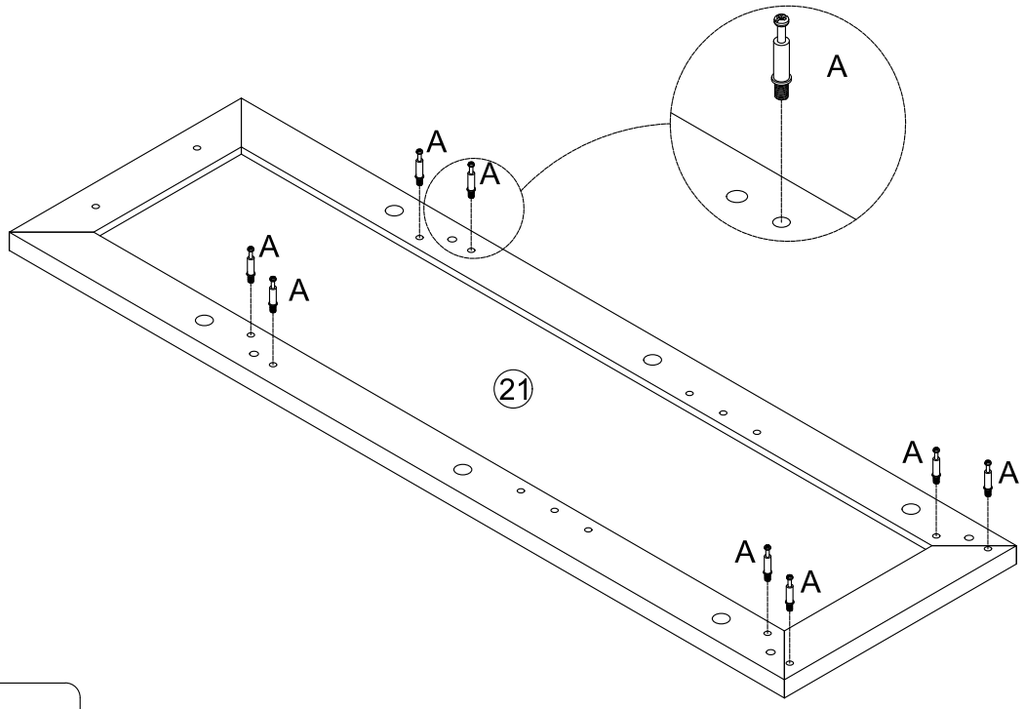

A x8
Ø6x35mm

42

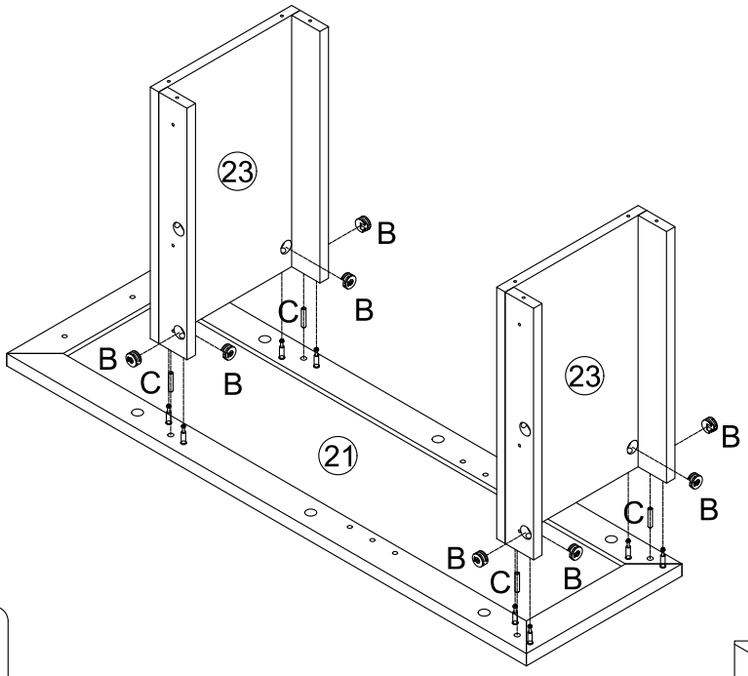

B x8
Ø15x10mm

C x4
Ø6x30mm

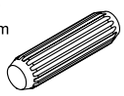

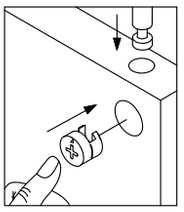

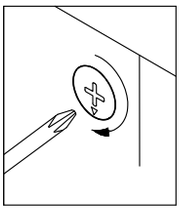

43

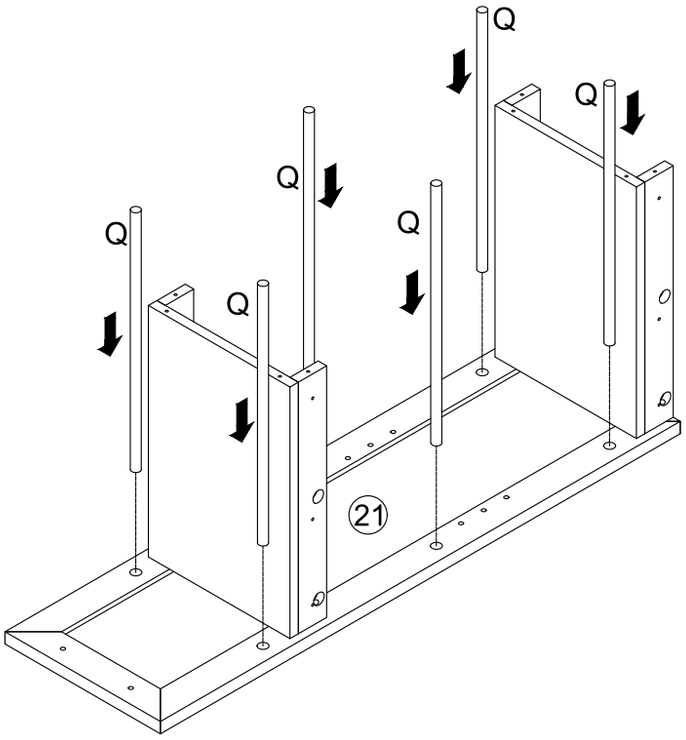

Q x6

44

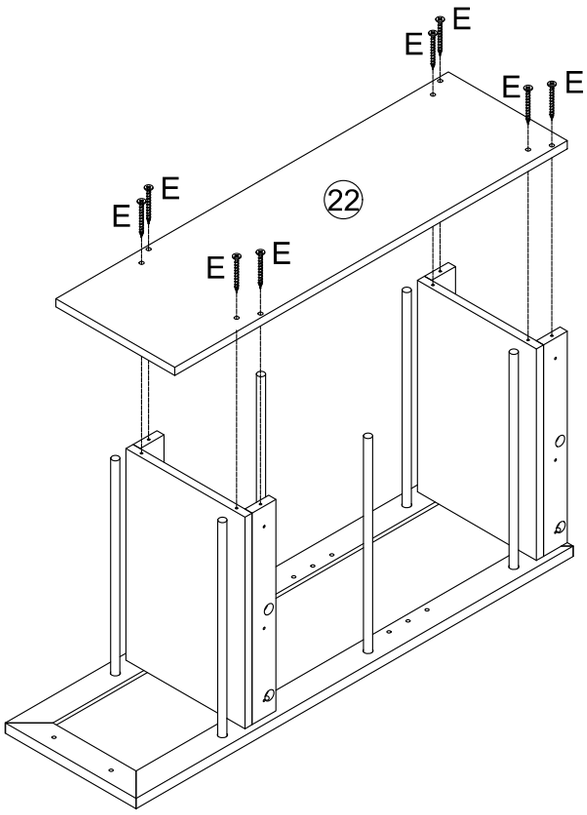

E x8

M4x30mm

45

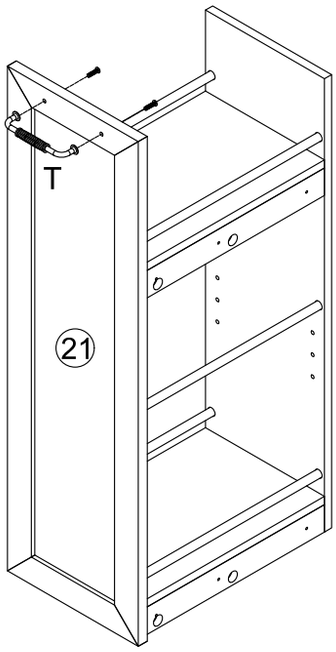

T x1

46

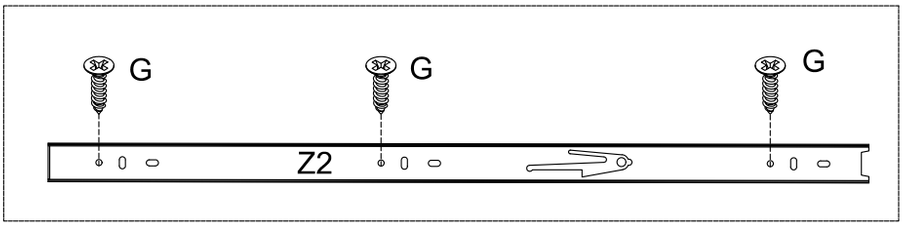

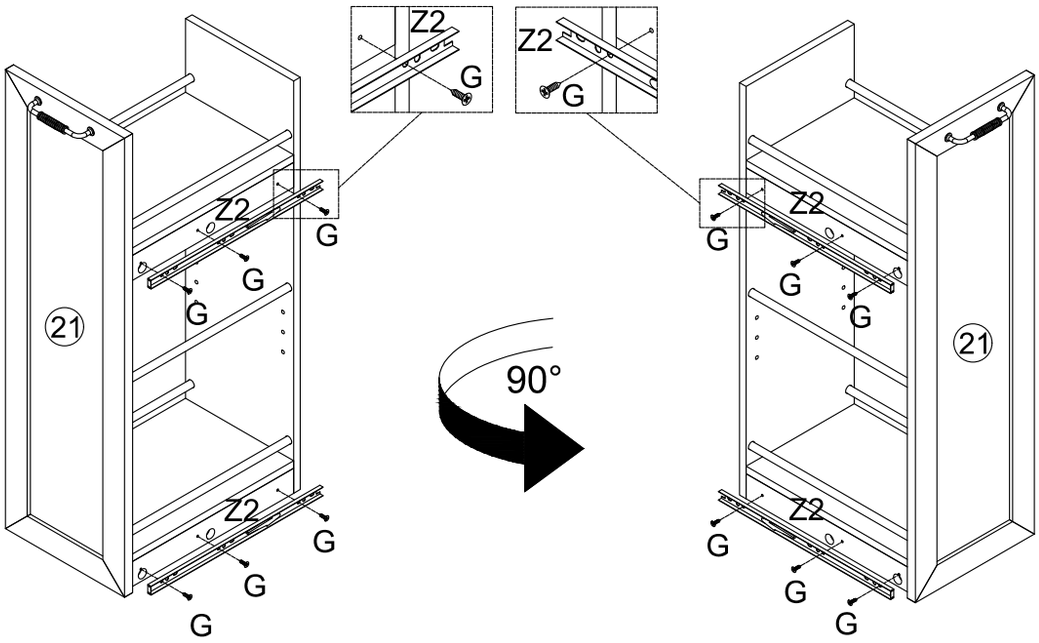

G x12
M3x12mm

Z2 x4

47

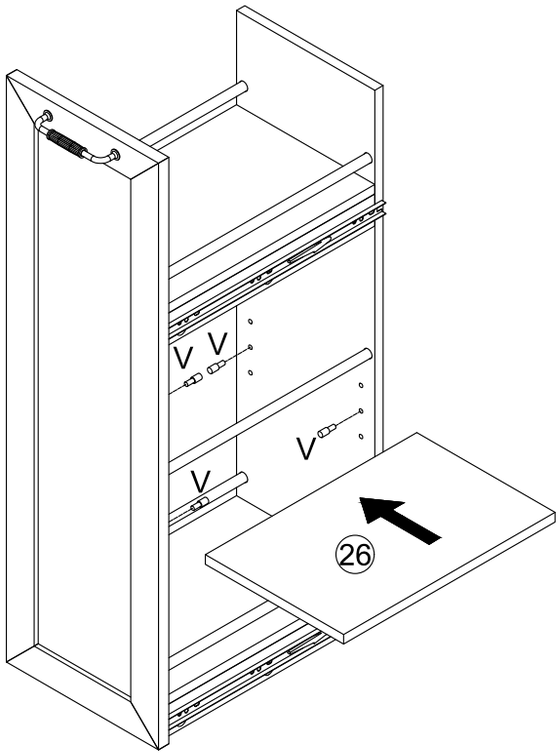

V x4

48

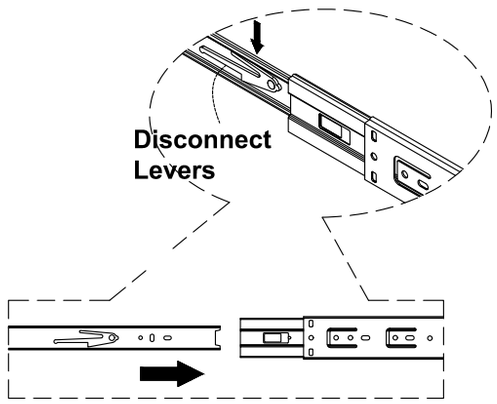

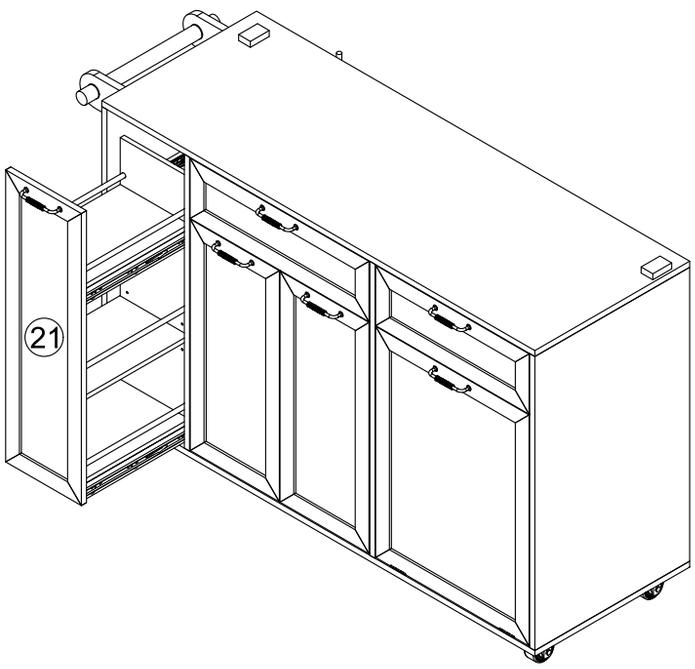

When installing the slide rail, it should be inserted at the same time, and then pushed together

49

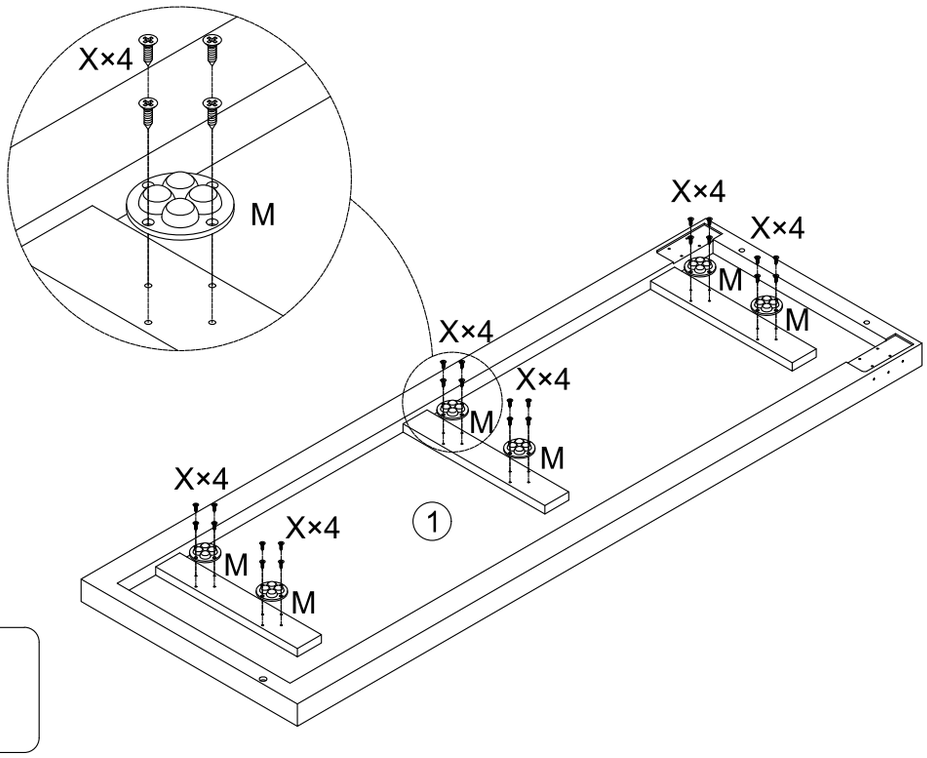

X x24
M3x14mm

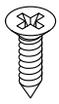

M x6

50

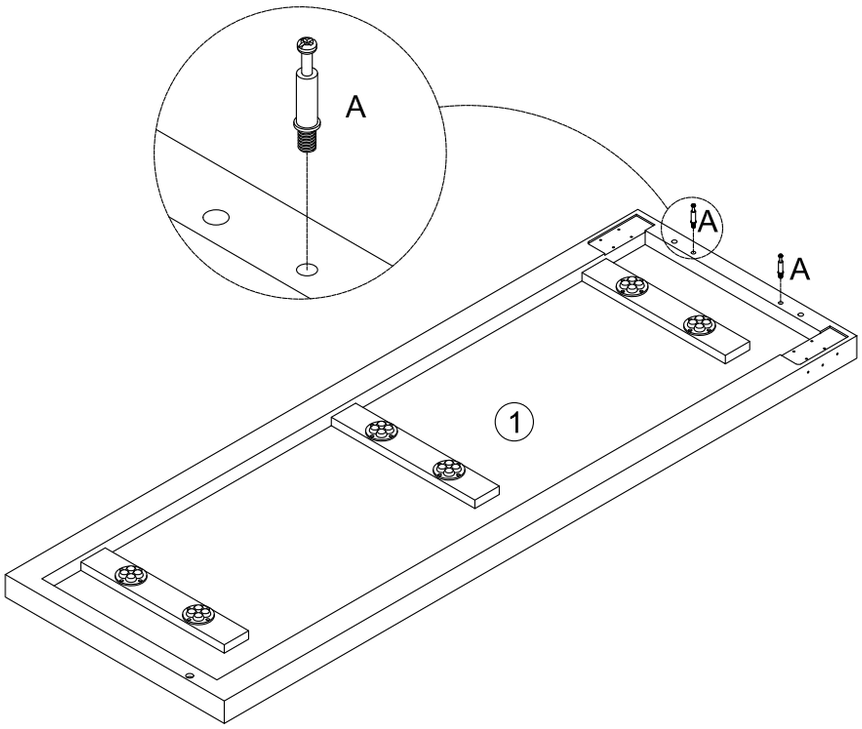

A x2
Ø6x35mm

51

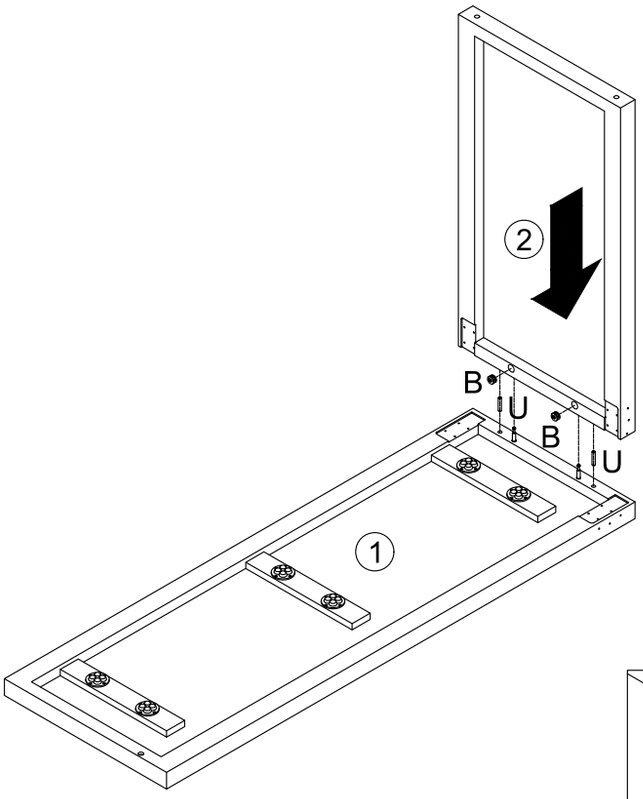

B x2
Ø15x10mm

U x2
Ø8x30mm

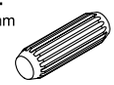

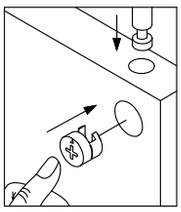

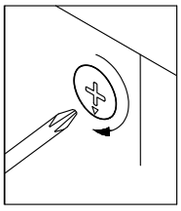

52

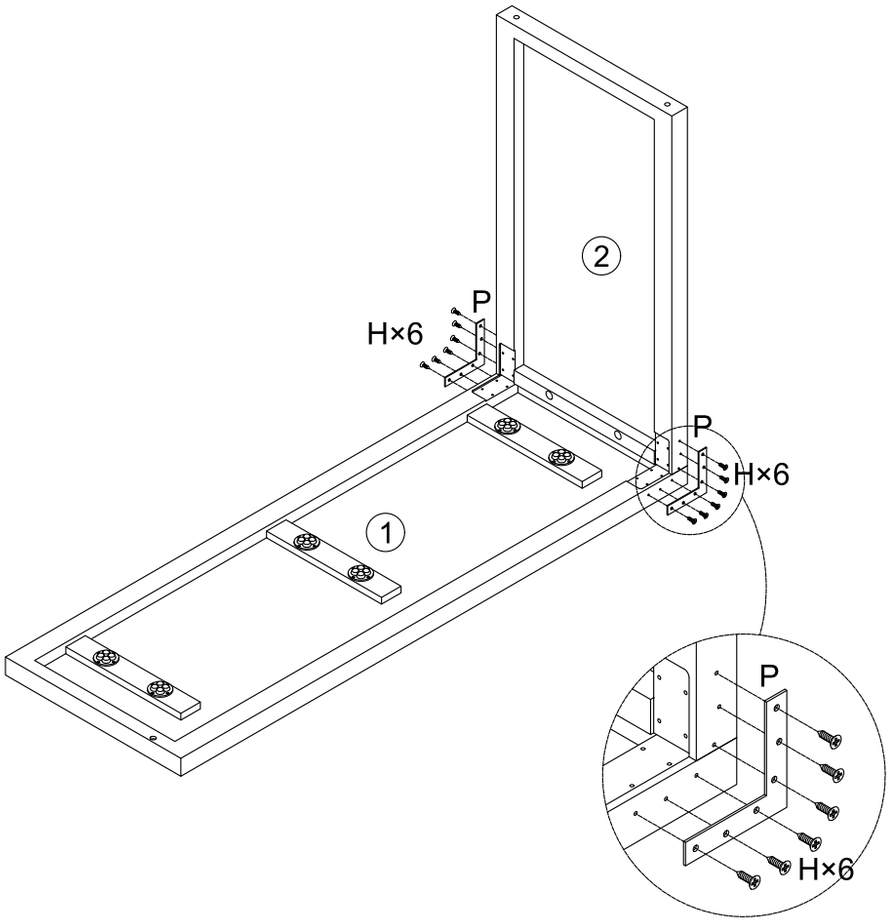

P x2

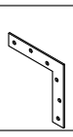

H x12
M4x20mm

53

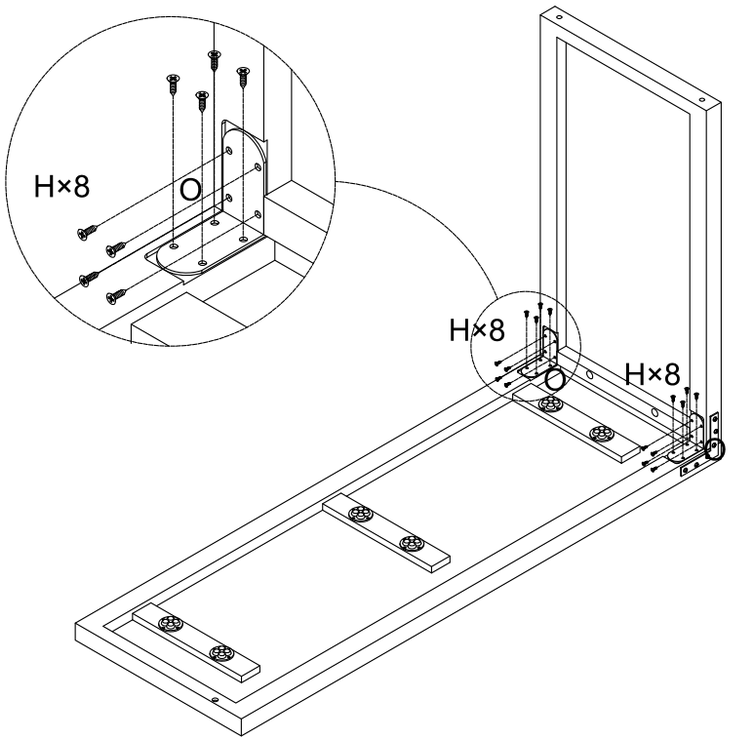

H x16
M4x20mm

O x2

54

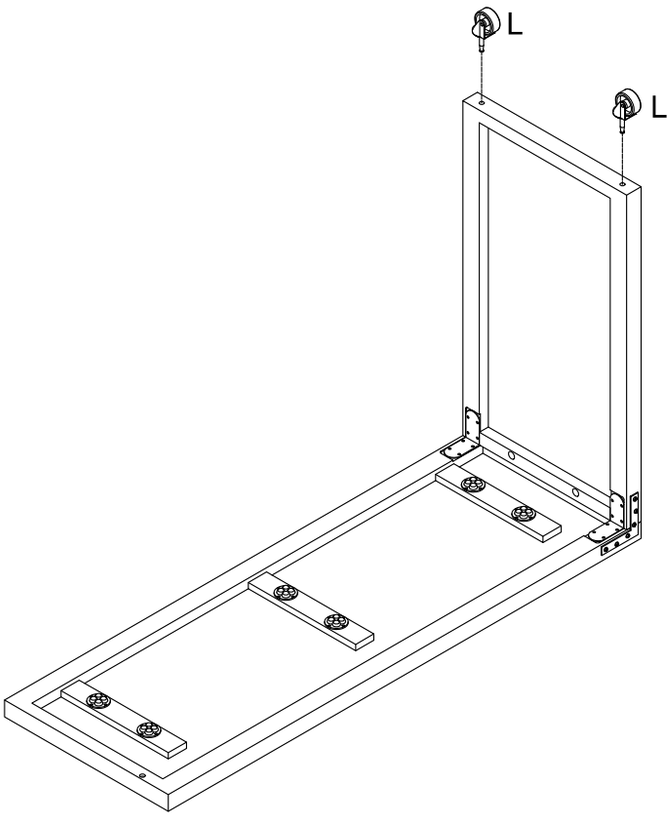

L x2

55

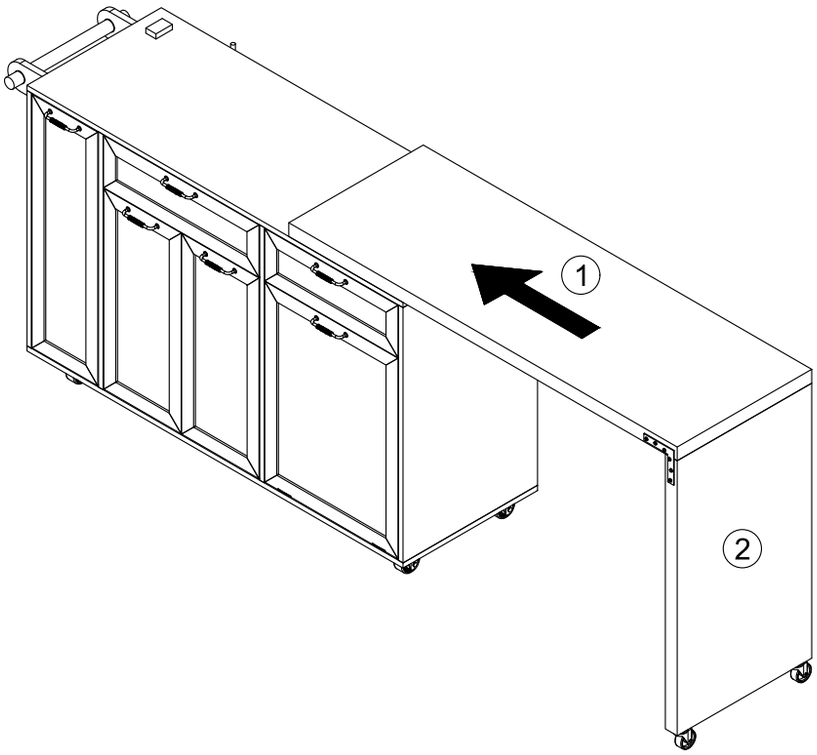

56

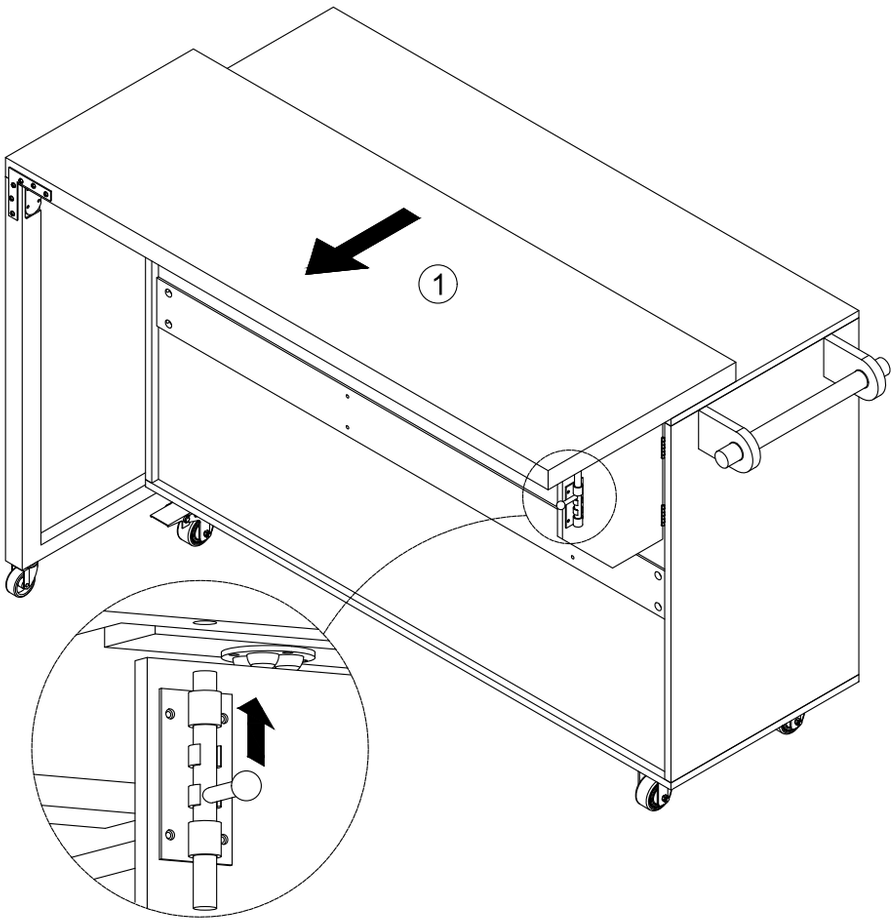

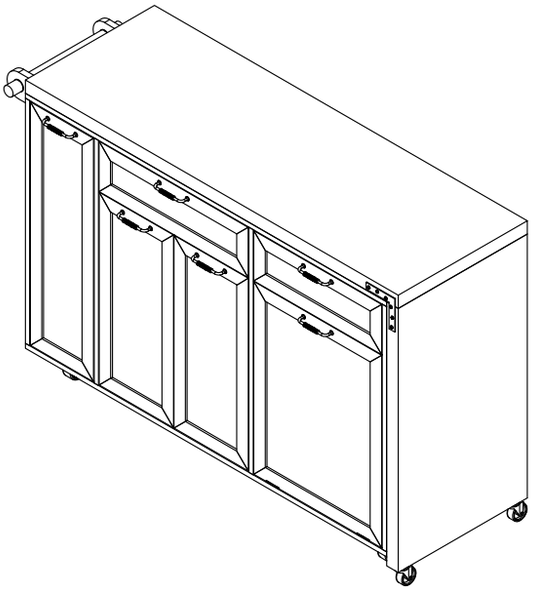

OR

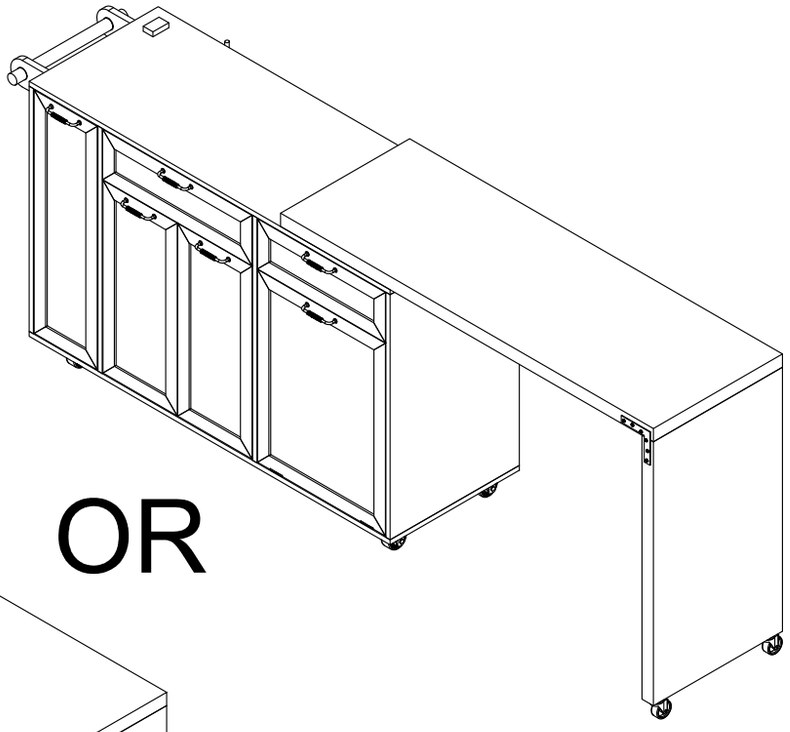

OR

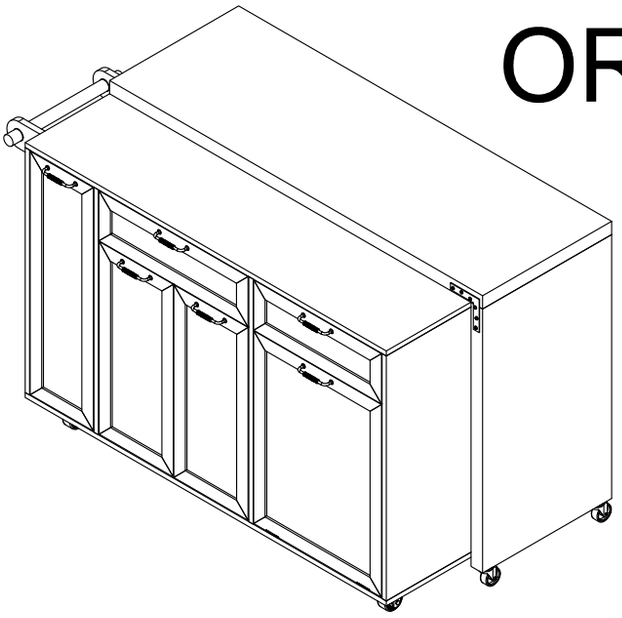

Assembly Instructions

Caution : You must read this before you proceed

Care & Maintenance

- Not for commercial use. For residential use only.
- Furniture may scratch floors. We recommend using furniture pads to protect your floors.
- Do not put hot items directly on furniture surface.
- Do not clean furniture with harsh cleansers or polish.
- Do not place furniture under direct sunlight.
- Do not place furniture near heating or cooling vents.
- Do not write on furniture without a padded barrier to protect the surface.
- Do not place furniture outside . For indoor use only.
- Stains may be removed with mild soap solution and damp cloth.
- Children should not climb or jump on the furniture.

- Dust and pick-up spills using a clean, non-colored, lint-free cloth.