INSTRUCTIONS

Note:

1.Please make sure that the electricity is powered off during installation!
2.Only a professional electrician should install this kind of products!

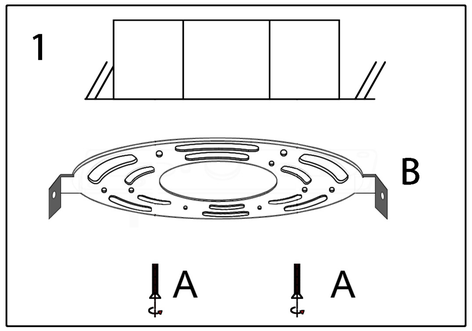

1.Install the bracket B to the ceiling junction box with screw A.

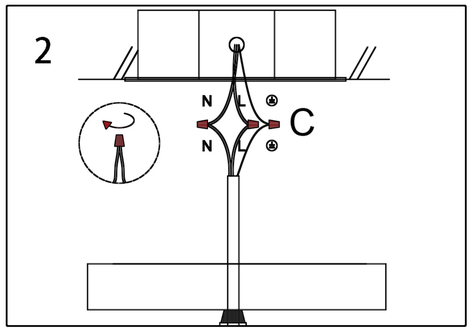

2. Connect the wire to your home line with cap connector C.

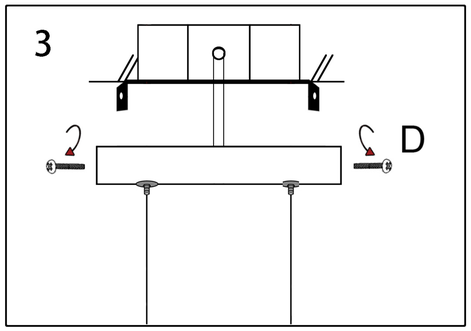

3. Install the canopy to the bracket with screws D.

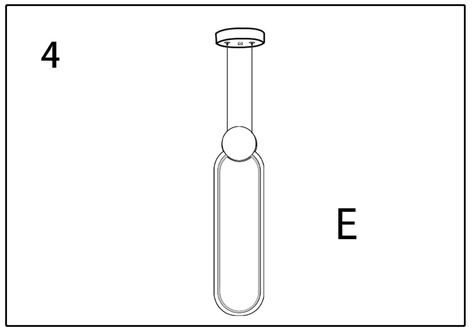

4. Complete the installation.

INSTRUCTIONS

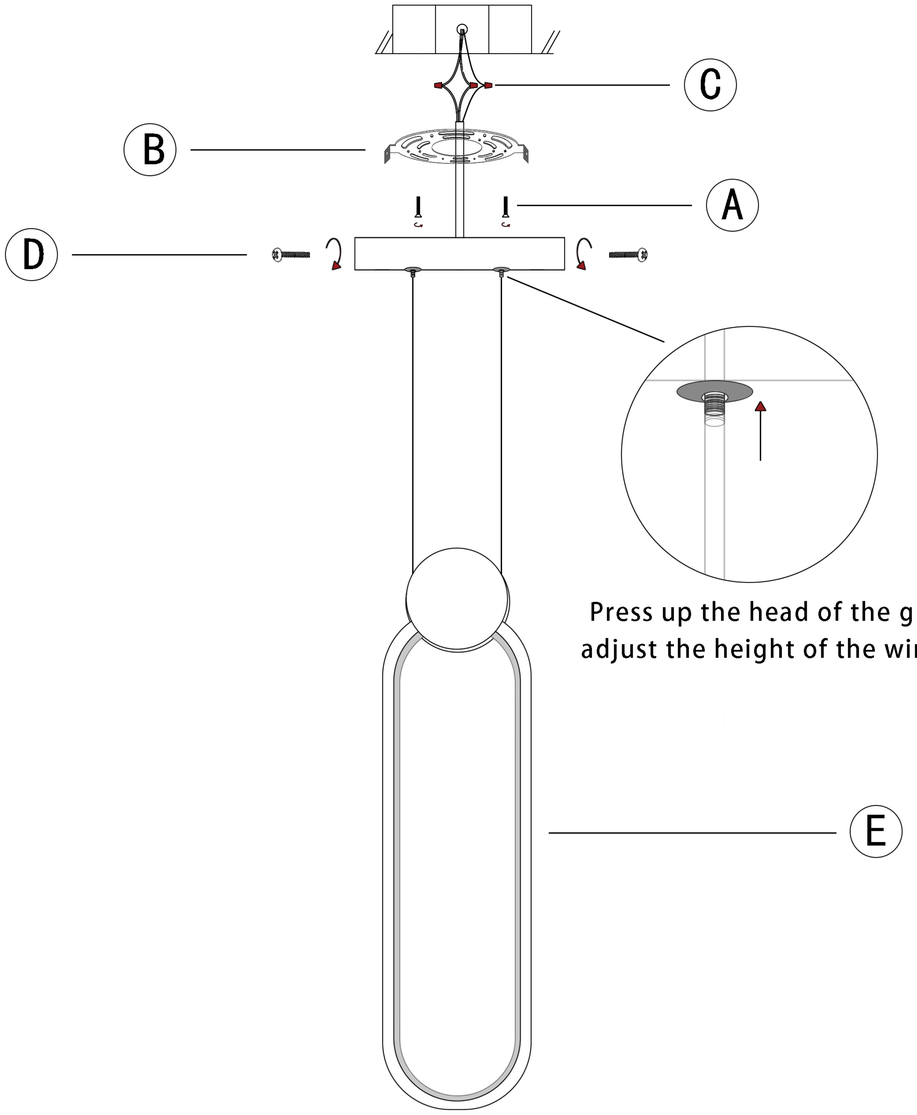

Press up the head of the gripper to adjust the height of the wire.

A 3PCS	B 1PCS	C 3PCS
D 2PCS	E 1PCS	