STORAGE BED FRAME

The product comes in 2 BOXES. Do not proceed with unpacking or assembly until both boxes are received.

- To prevent the hardware package from being lost, a special loss-prevention cord is included. Use it to locate the hardware package.

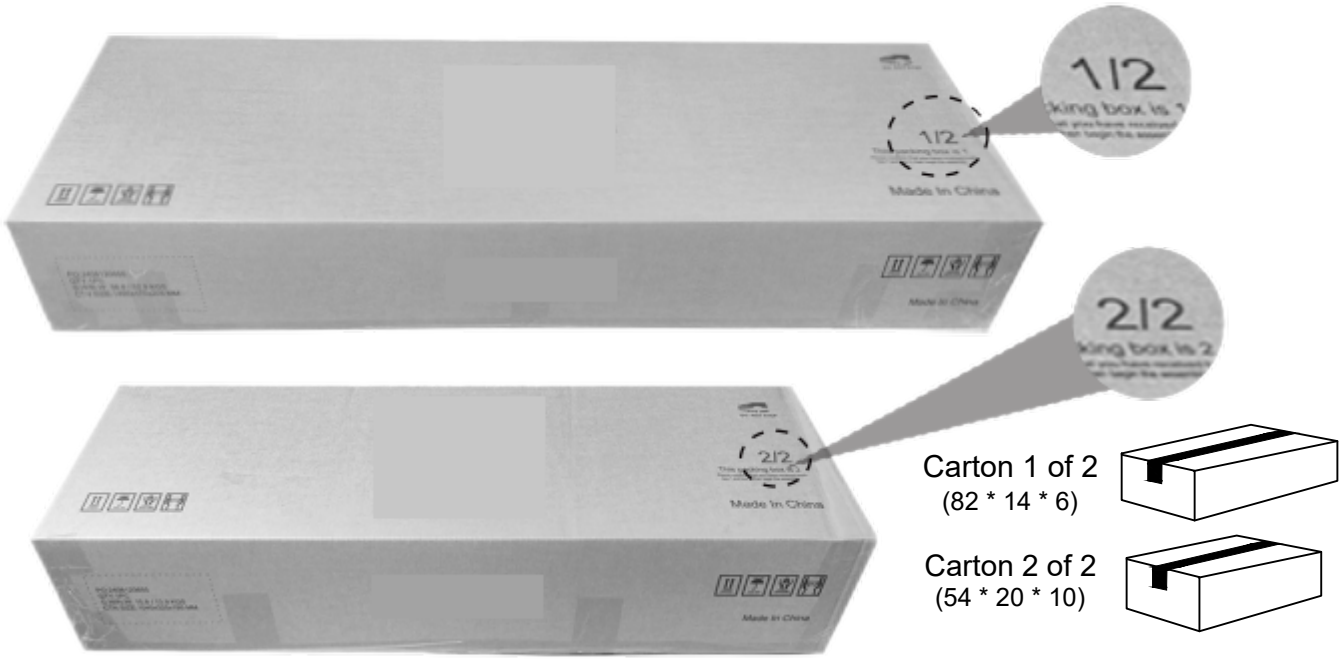

- Box identification is shown in the location indicated in the picture on the left of the outer box. The assembly guide and accessory box (including hardware, socket, lamp, and remote) are in box 2/2. Please locate all accessories from both boxes before assembly.

Bookcase Storage Bed Frame
Assembly Instructions

Please carefully reading this manual will help you complete the product installation more efficiently

BEFORE INSTALLATION

.Please read this guide carefully to familiarize yourself with the required tools, materials, and procedures. Follow the applicable sections to ensure proper assembly.

.This guide is based on the latest product information at the time of printing. The company reserves the right to make changes to product features, packaging, or availability without notice. Before assembling the furniture, ensure all necessary preparations are completed.

.This manual includes important installation, cleaning, and maintenance information. Please read and keep it for future reference.

.This furniture is made from E1-grade board material, with harmful gas emissions of less than 1.5mg/L, compliant with GB/T 15102-20170 standards.

.Before assembly, check if the product is damaged. Place it on a flat surface for balance.

.Avoid prolonged exposure to moisture and sunlight. Clean the furniture regularly with a damp cloth to prevent bacterial growth.

.Do not expose the furniture to acidic, alkaline, or corrosive liquids. Handle with care during installation to avoid scratches or damage.

SAFETY WARNINGS

.Please follow the warning information displayed on this product and its packaging. Do not remove the warning labels.

.Always use recommended mattress sizes or supports to prevent entrapment or falling.

.Regularly inspect the product for proper assembly, damage, and tightness.

.Do not play or jump on the bed

.Avoid using replacement parts without manufacturer approval.

.Do not use waterbeds or floating mattresses.

.Avoid attaching any objects like hooks, straps, or ropes to the bed.

.Please keep this manual for future reference.

.Safety is a shared responsibility between us as the manufacturer and you as the guardian. Please read and consider the warnings on the page.

The box 1

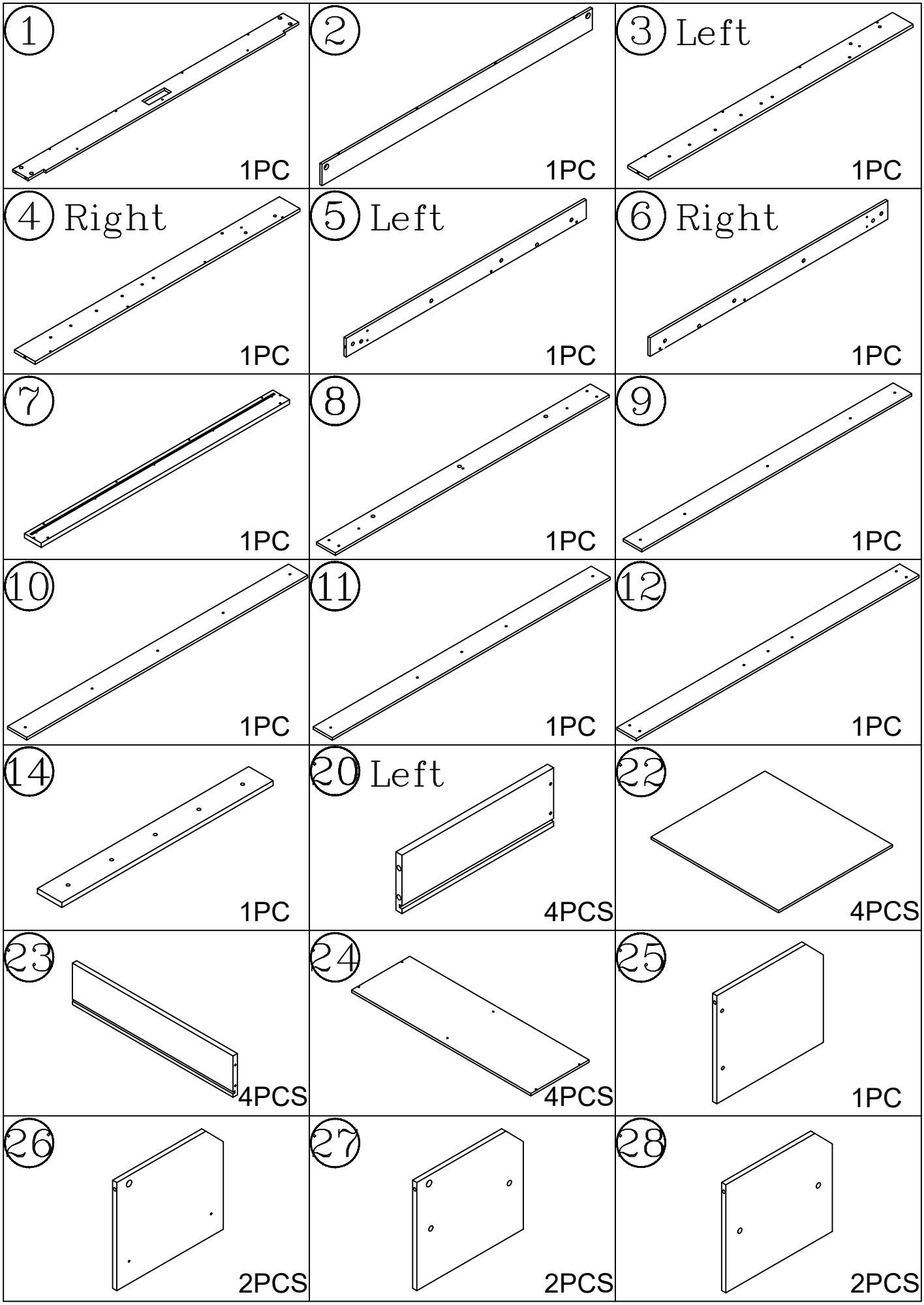
1
1PC
2
1PC
3 Left
1PC
4 Right
1PC
5 Left
1PC
6 Right
1PC
7
1PC
8
1PC
9
1PC
10
1PC
11
1PC
12
1PC
14
1PC
20 Left
4PCS
22
4PCS
23
4PCS
24
4PCS
25
1PC
26
2PCS
27
2PCS
28
2PCS

The box 1 continued

29 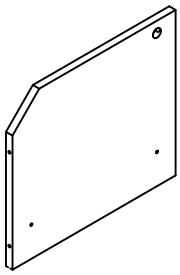 2PCS	30 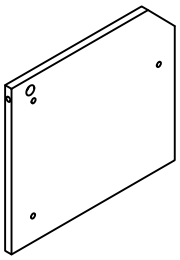 1PC	31 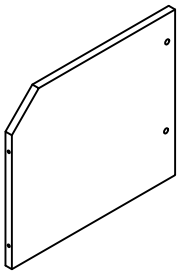 1PC
32 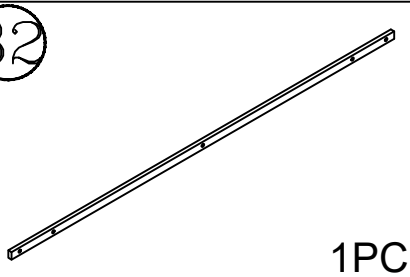 1PC	21 Right 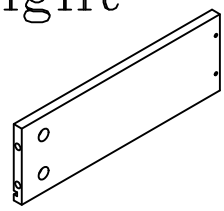 3PCS	35 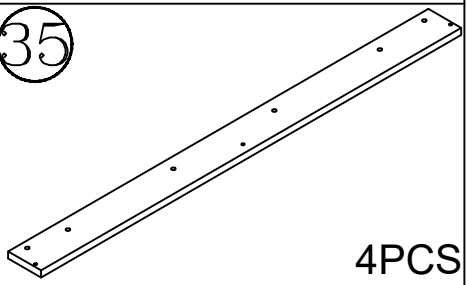 4PCS
37 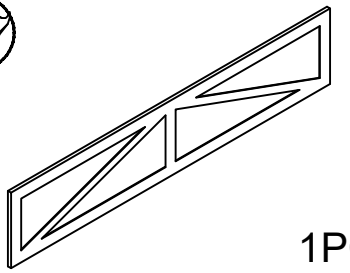 1PC	48 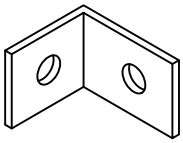 4PCS	40 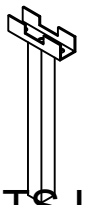 PARTS LIST 1PC
41 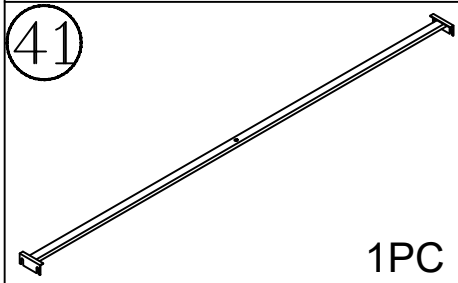 1PC	43 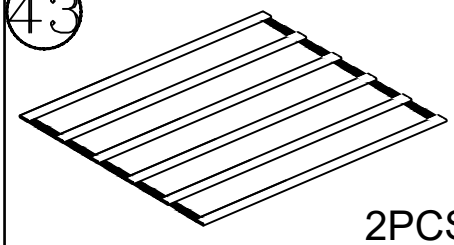 2PCS	44-1 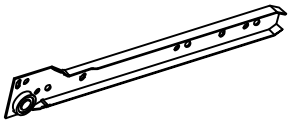 4PCS
44-2 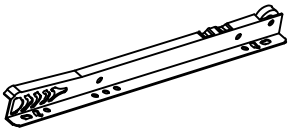 4PCS	45-1 Left 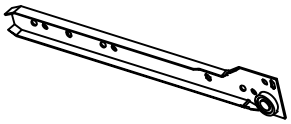 4PCS	45-2 Right 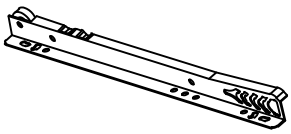 4PCS
47 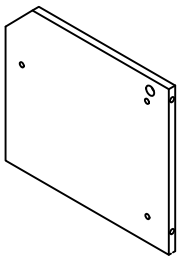 1PC		

The box 2

13 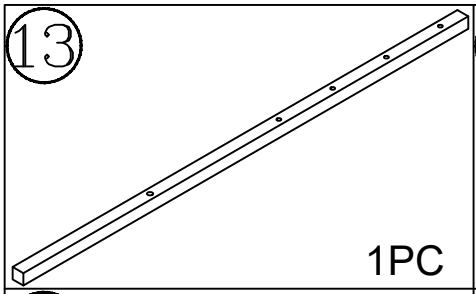 1PC	15 Left 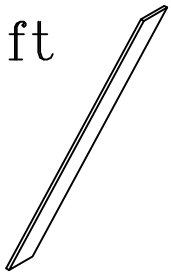 1PC	16 Right 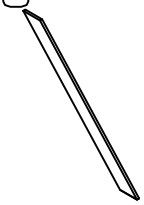 1PC
17 Left 1PC	18 Right 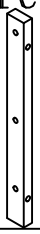 1PC	19 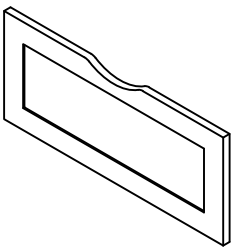 4PCS
21 Right 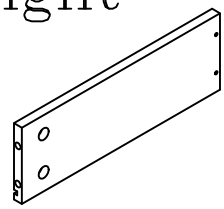 1PC	33 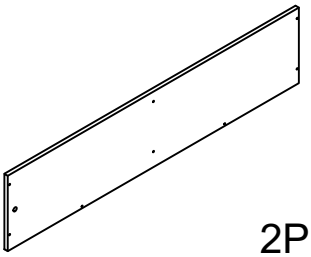 2PCS	36 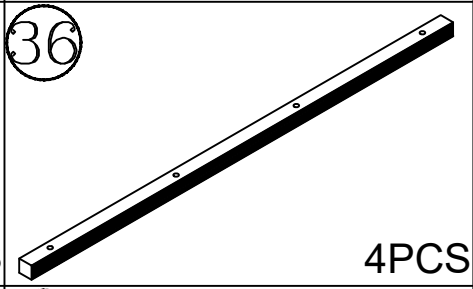 4PCS
38 1PC	42 Left 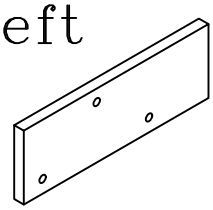 1PC	46 Right 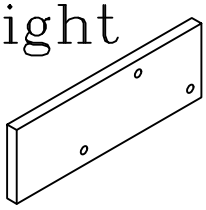 1PC
34 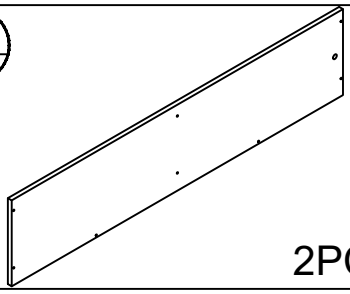 2PCS	39 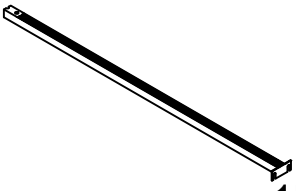 1PC	

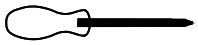

Phillips screwdriver
(medium & large)

Ruler-Use this ruler to help correctly identify the screws.

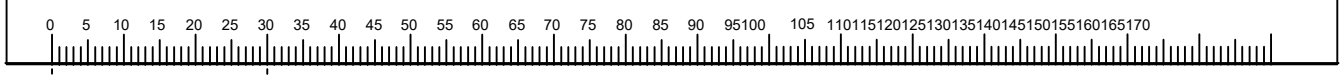

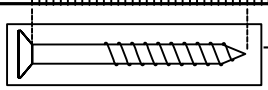

The length of the screw is measured from the rod part excluding the screw cap (30mm screw shown).

The box 1 continued

A M6*11mm Ø15/64*15/32" 18PCS	B M6*20mm Ø15/64*51/64" 43PCS	C M6*30mm Ø15/64*3/16" 2PCS
D M6*35mm Ø15/64*1-3/8" 16PCS	E M6*50mm Ø15/64*1-31/32" 4PCS	F M8*35mm Ø5/16*1-3/8" 2PCS
G M8*50mm Ø5/16*1-31/32" 5PCS	H Φ6*Φ16mm Ø16/64*19/32" 22PCS	I Φ6*30mm Ø15/64*1-3/16" 2PCS
J M5 Ø13/64 1PC	K1 Ø15*10mm Ø19/32*25/64" 49PCS	K2 Ø7*40mm Ø9/32*1-37/64" 49PCS
L M5*40mm Ø13/64*1-37/64" 76PCS	M 1PC	N M4 Ø5/32 1PC
O 1PC	P M4*12mm Ø5/32*15/32" 42PCS	Q M6*45mm Ø15/64*1-49/64" 4PCS
R 2PCS	S M3 Ø1/8 1PC	T M8*60mm Ø5/16*2-23/64" 1PC

Contact After-Sales Support:

Our professional customer service staff will promptly answer and carefully record your feedback. Please accurately describe the details of the missing parts as well as your order information (e.g., order number, purchase platform, purchase date). This helps us efficiently locate your records and handle the issue quickly. Please use the subject line "Missing Bed Parts Issue" and clearly list the details of the missing parts in the email body. Attach the prepared photos and your order information. Our after-sales team will review your email as soon as possible and arrange for the replacement parts.

Product or Packaging Damage

Damage Affecting Use:

If the product or packaging damage is severe and has affected the normal use of the panel bed, please promptly take clear photos or videos showing the damaged area and its extent (multi-angle shots are recommended to provide a complete view). Send the photos or videos to our after-sales service email address at with the subject line " Bed Damage Affecting Use." Include your order information in the email body. Once we verify the situation, we will replace the product with a brand-new one or arrange a refund according to your pref-erence to ensure your rights are fully protected.

Damage Not Affecting Use:

If the product or packaging damage does not affect the normal use of the panel bed. Attach relevant photos, videos, and order details (as described above). Based on the actual damage, we will provide professional repair guidance to help you
per-form a simple fix yourself. Alternatively, we may offer partial compensation to express our apologies, ensuring your satisfaction with our product.

Regardless of the situation, our after-sales team will maintain a professional and responsible attitude, actively resolve the issue, and strive to ensure a pleasant shopping experience for you

HANDLING MISSING OR DAMAGED ITEMS

If you find missing parts, damaged packaging, or product damage, follow these steps to contact our support team

Missing Parts

Parts Verification: Please carefully compare the parts you received with the accessory list provided in the manual (the accessory list can be found on of this manual)-Check the specific names, specifications, and quantities of the missing parts. To help us understand the situation more clearly and expedite the replacement process, we kindly ask you to provide clear photos of the missing parts, as shown in the example below.

STORAGE BED FRAME

ASSEMBLY INSTRUCTIONS - PLEASE KEEP FOR FUTURE REFERENCE

NOTE:

Comes with TWO PACKAGES with TWO TRACKINGS, may NOT be delivered at the same time.

KING SIZE:

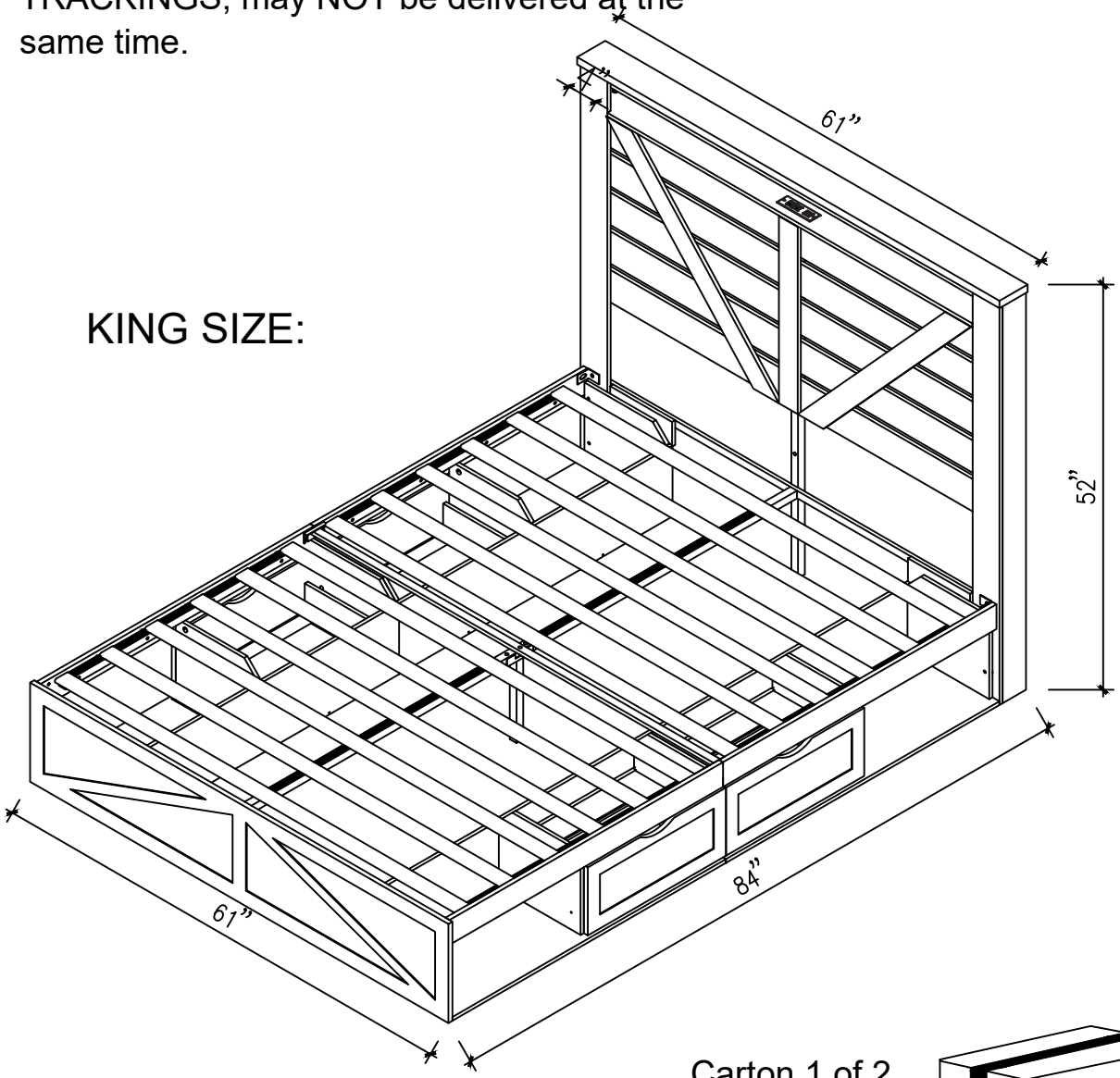

Carton 1 of 2
(64 * 17 * 10)

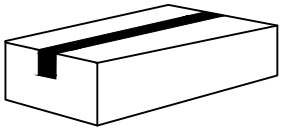

Carton 2 of 2
(45 * 14 * 7)

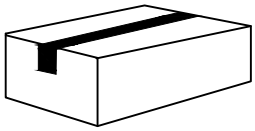

Important - Please read these instructions fully before starting assembly

TOOLS & EQUIPMENT

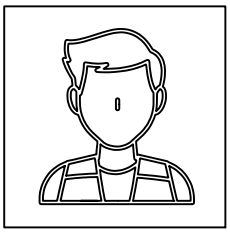

2 people needed

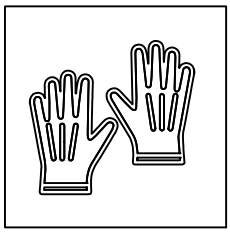

Work gloves

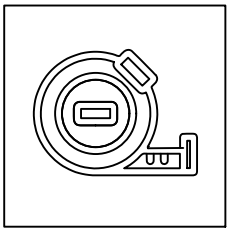

Tape measure

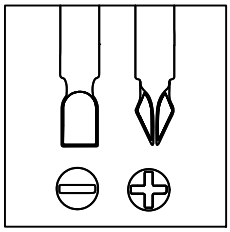

Other Tools Required
.Phillips Screwdriver
（Not Included）

SIMPLE ASSEMBLY STEPS

1. Read the manual carefully.
2. Check all parts and hardware.
3. Prepare necessary tools.
4. Have at least two adults for assembly.
5. Assemble on a flat surface for balance.
6. Do not tighten screws until assembly is complete.

Protect parts during assembly. Clean surfaces with a damp cloth only.

Customer Support:

If parts are missing or you need assistance, please contact us. When calling or emailing, please provide your order number and relevant product information.

HEADBOARD SECTION

The headboard section assembly requires a total of 19 labeled panels,as shown in the diagram. Please identif and gather all the panels bafore proceeding

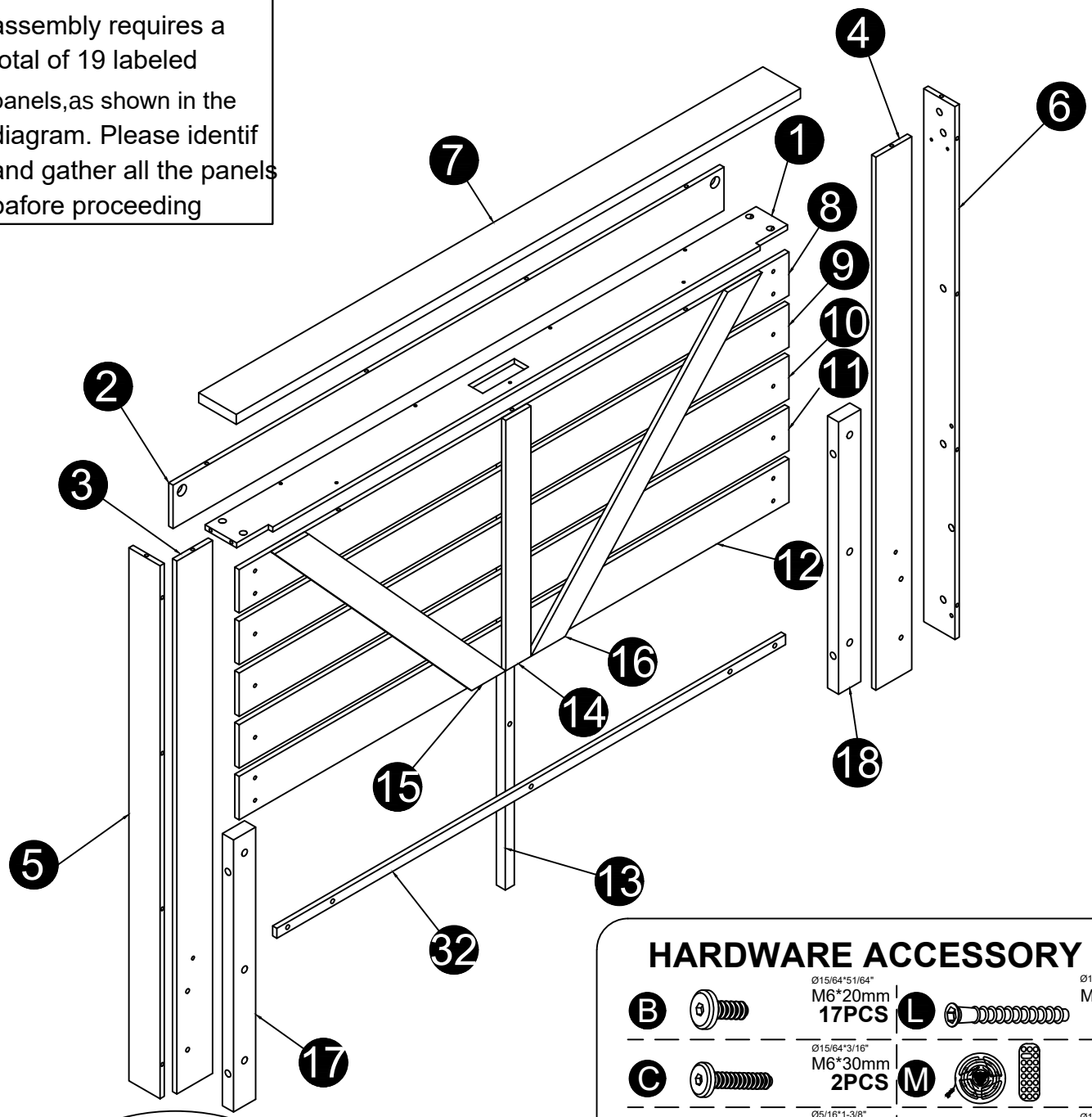

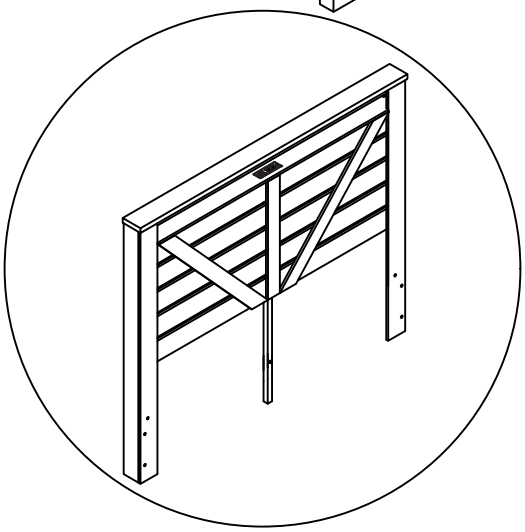

HARDWARE ACCESSORY LIST

B	Ø15/64*51/64" M6*20mm	17PCS	L	Ø13/64*1-37/64" M5*40mm	4PCS
C	Ø15/64*3/16" M6*30mm	2PCS	M		1PC
E	Ø5/16*1-3/8" M6*50mm	4PCS	Q	Ø15/64*1-49/64" M6*45mm	4PCS
H	Ø16/64*19/32" Ø6*Ø16mm	4PCS			
I	Ø15/64*1-3/16" Φ6*30mm	2PCS			
K1	Ø19/32*25/64" Φ6*30mm	19PCS			
K2	Ø9/32*1-37/64" Φ7*40mm	21PCS			

Headboard Secton

Step 1

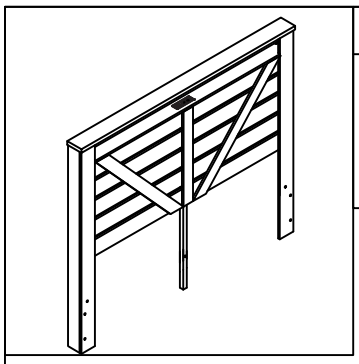

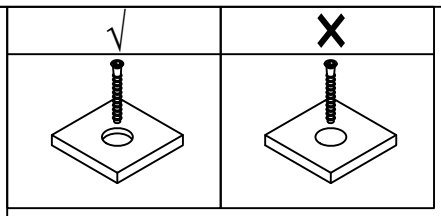

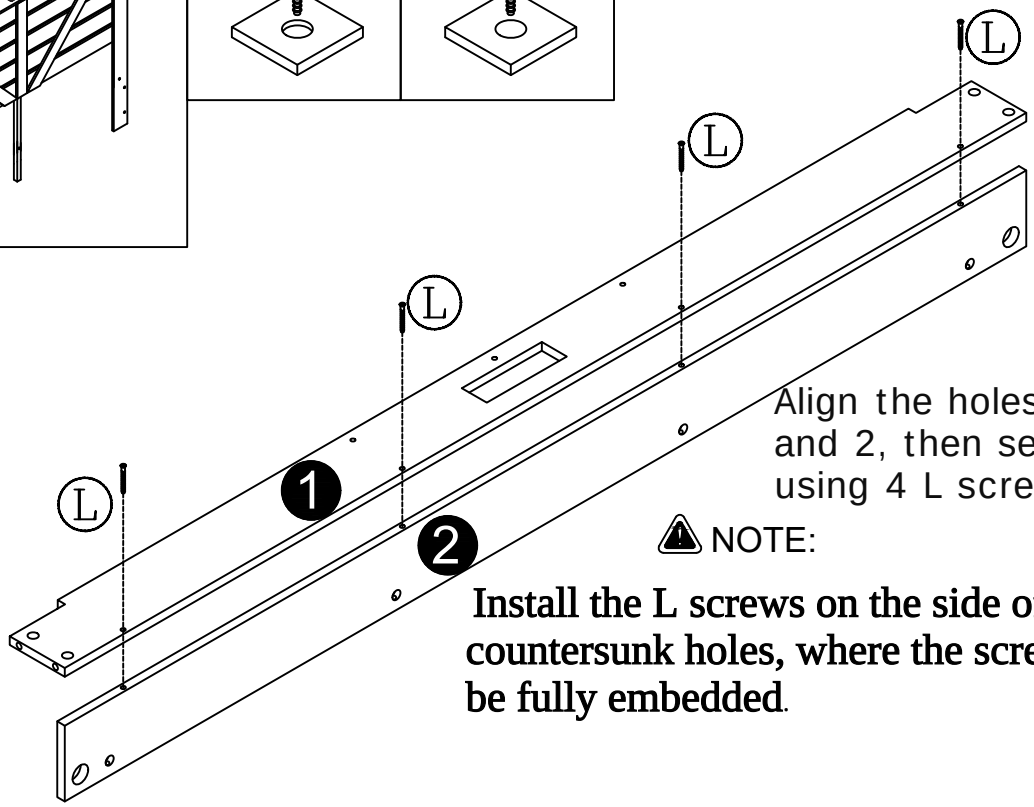

Align the holes of parts 1 and 2, then secure them using 4 L screws.

NOTE:

Install the L screws on the side of part 1 with countersunk holes, where the screw caps can be fully embedded.

L	4PCS
M5*40mm Ø13/64*1-37/64"	

Headboard Secton

Step 2

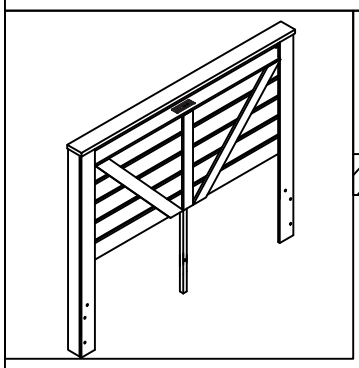

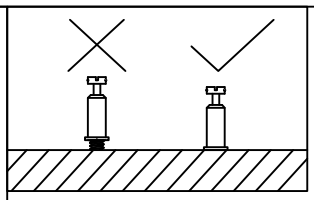

Install 8 K2 screws into parts 3 and 4.

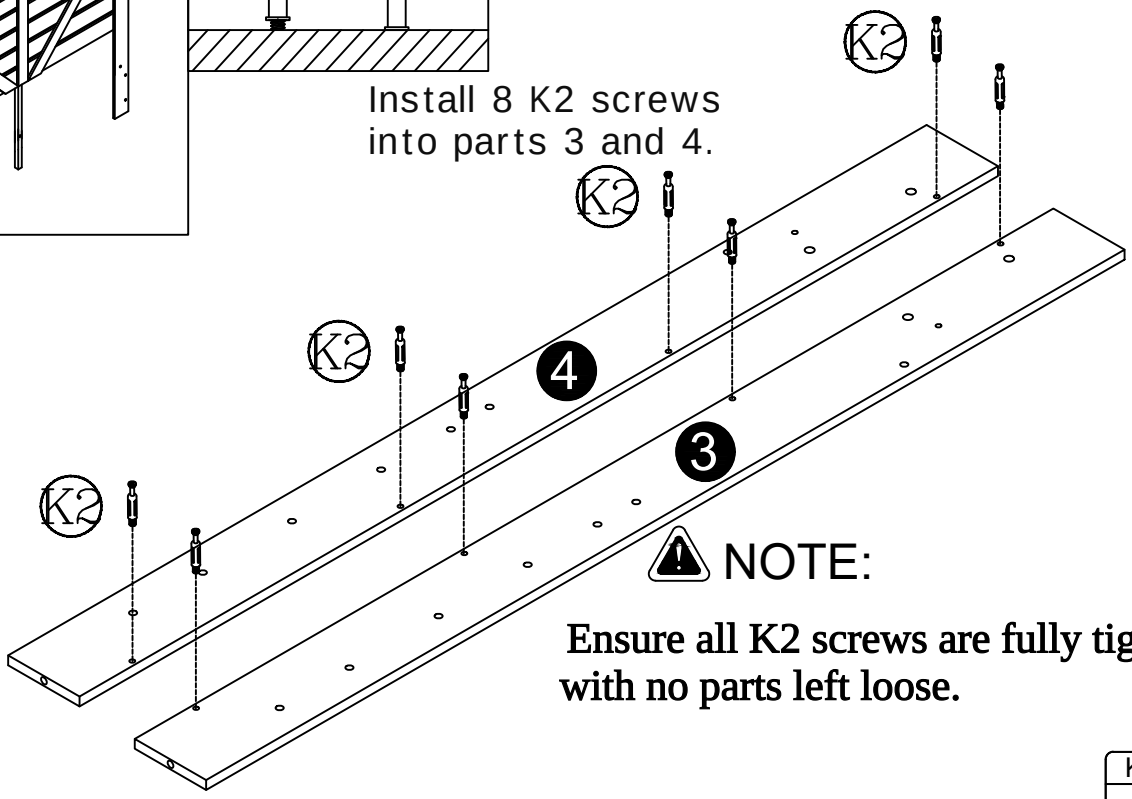

NOTE:

Ensure all K2 screws are fully tightened, with no parts left loose.

K2	8PCS
Ø7*40mm Ø9/32*1-37/64"	

Part 3 is the left side panel, and part 4 is the right side panel. Be sure to distinguish between left and right during installation.

Headboard Secton

Step 3

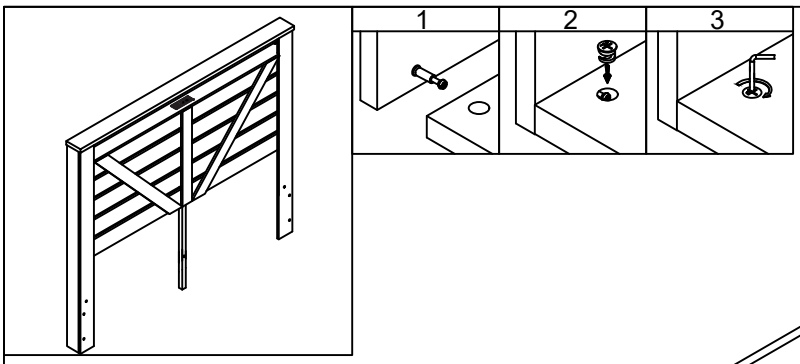

a. Insert the K2 screws from part 3 into part 5 and secure using 4 K1 locking nuts.

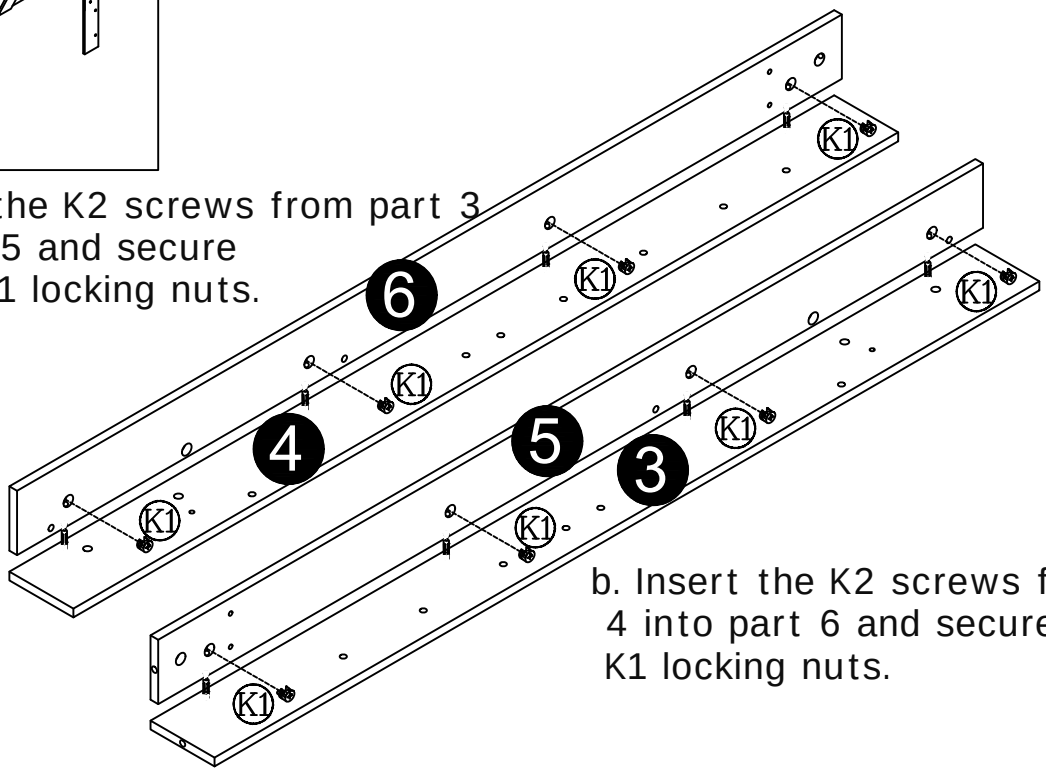

b. Insert the K2 screws from part 4 into part 6 and secure using 4 K1 locking nuts.

K1	8PCS

Ø15*10mm
Ø19/32*25/64"

Headboard Secton

Step 4

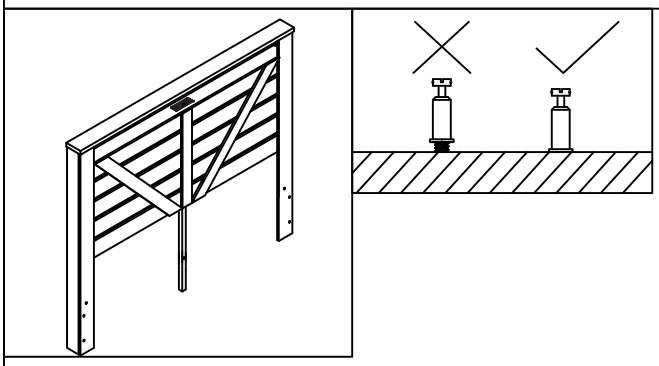

Note Ensure all K2 screws are fully tightened.

a. Attach 2 K2 screws to part 5

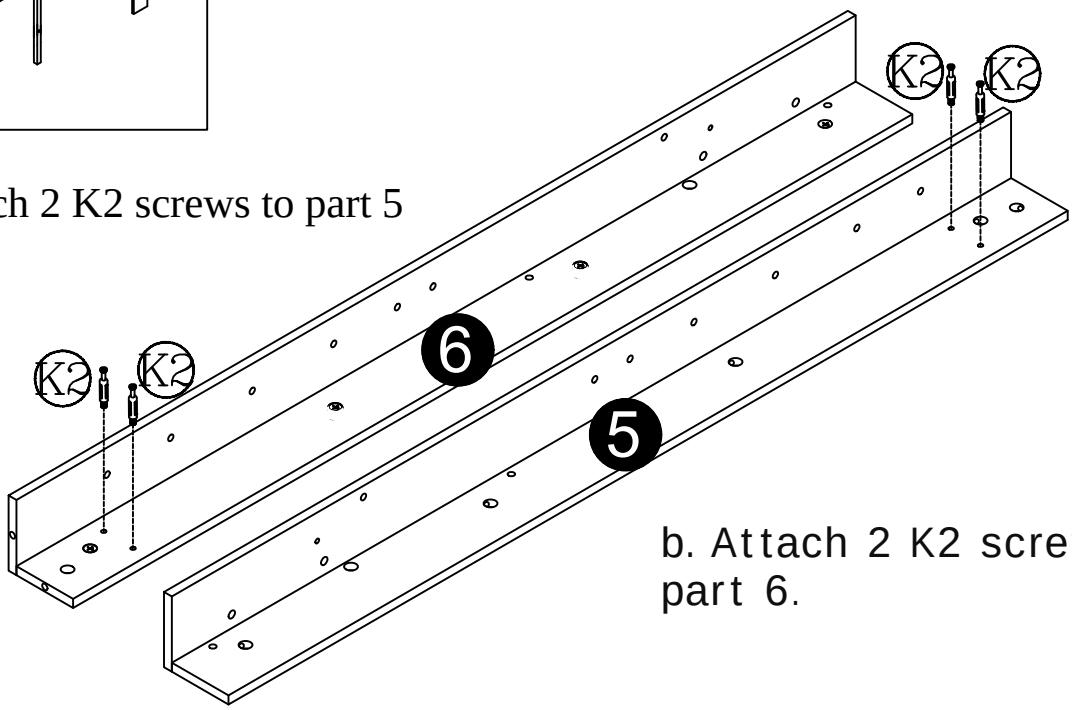

b. Attach 2 K2 screws to part 6.

K2	4PCS

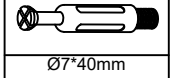

Ø7*40mm
Ø9/32*1-37/64"

Headboard Secton

Step 5

Note that there is a hole for the LED strip to pass through in this direction.

Insert part 6 into the left side of part 1 and part 5 into the right side of part 1. Secure each with 4 K1 locking nuts

K1	4PCS
Ø15*10mm Ø19/32"*25/64"	

Headboard Secton

Step 6

Affix the LED strip (M) into the groove on part 7.

Note Do not bend the LED strip at a 90° angle to avoid damaging it.

M	1PC

Headboard Secton

Step 7

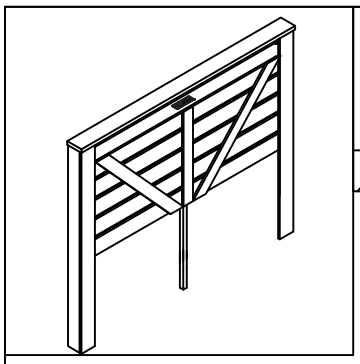

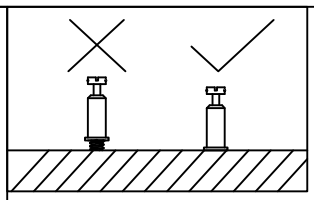

Note Ensure all K2 screws are fully tightened.

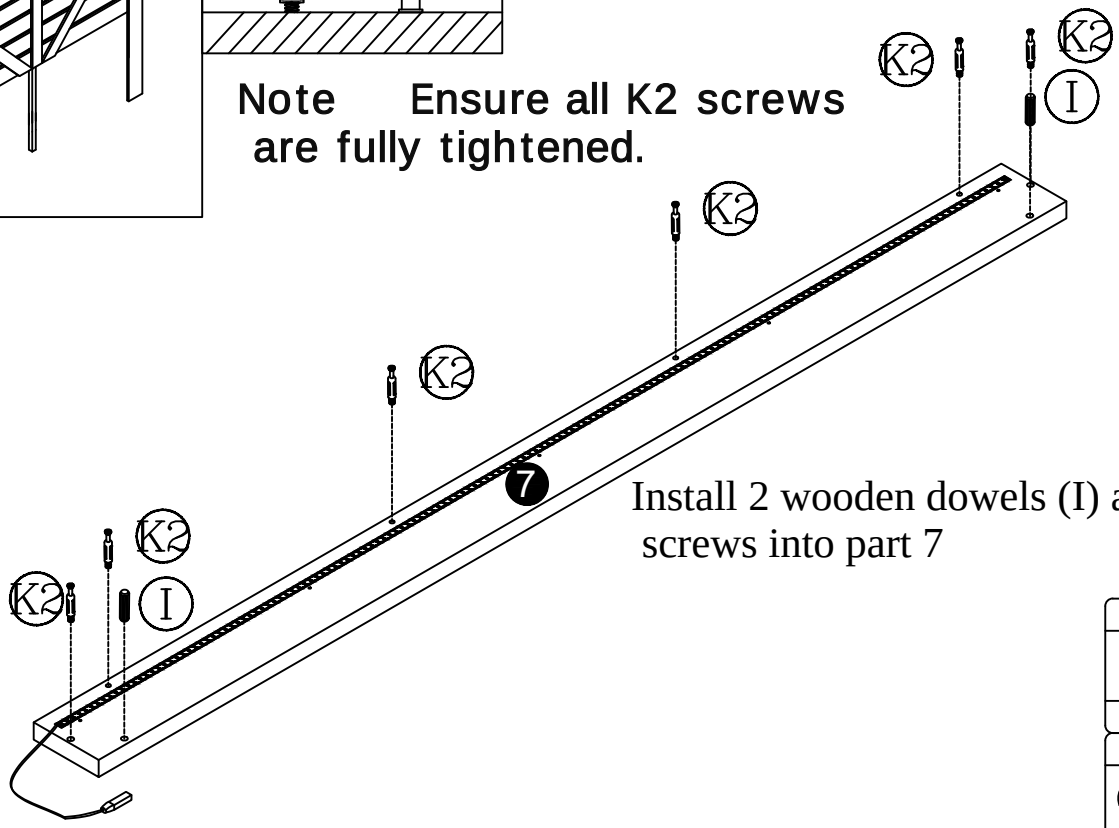

Install 2 wooden dowels (I) and 6 K2 screws into part 7

I	2PCS
Ø6*30mm Ø15/64*1-3/16"	
K2	6PCS
Ø7*40mm Ø9/32*1-37/64"	

Headboard Secton

Step 8

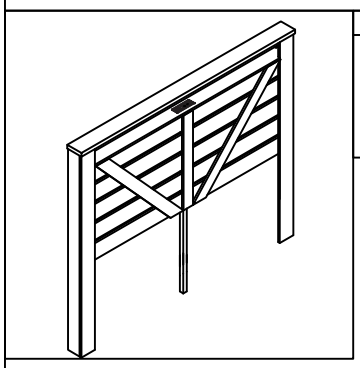

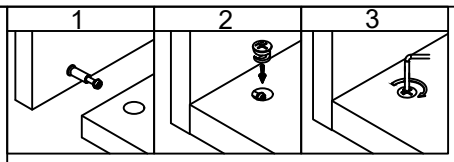

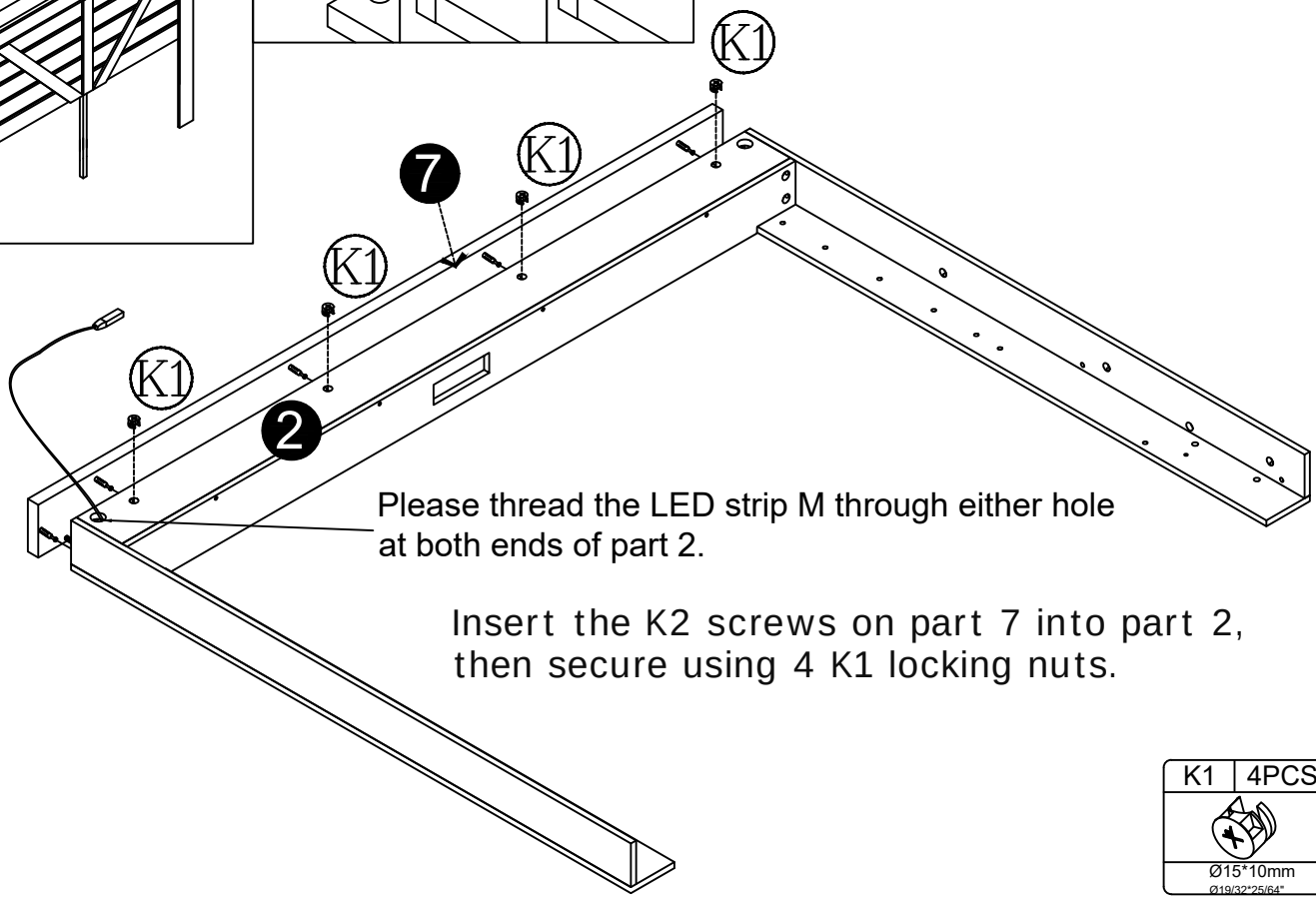

Please thread the LED strip M through either hole at both ends of part 2.

Insert the K2 screws on part 7 into part 2, then secure using 4 K1 locking nuts.

K1	4PCS
Ø15*10mm Ø19/32*25/64"	

Headboard Secton

Step 9

Note Ensure all K2 screws are fully tightened.

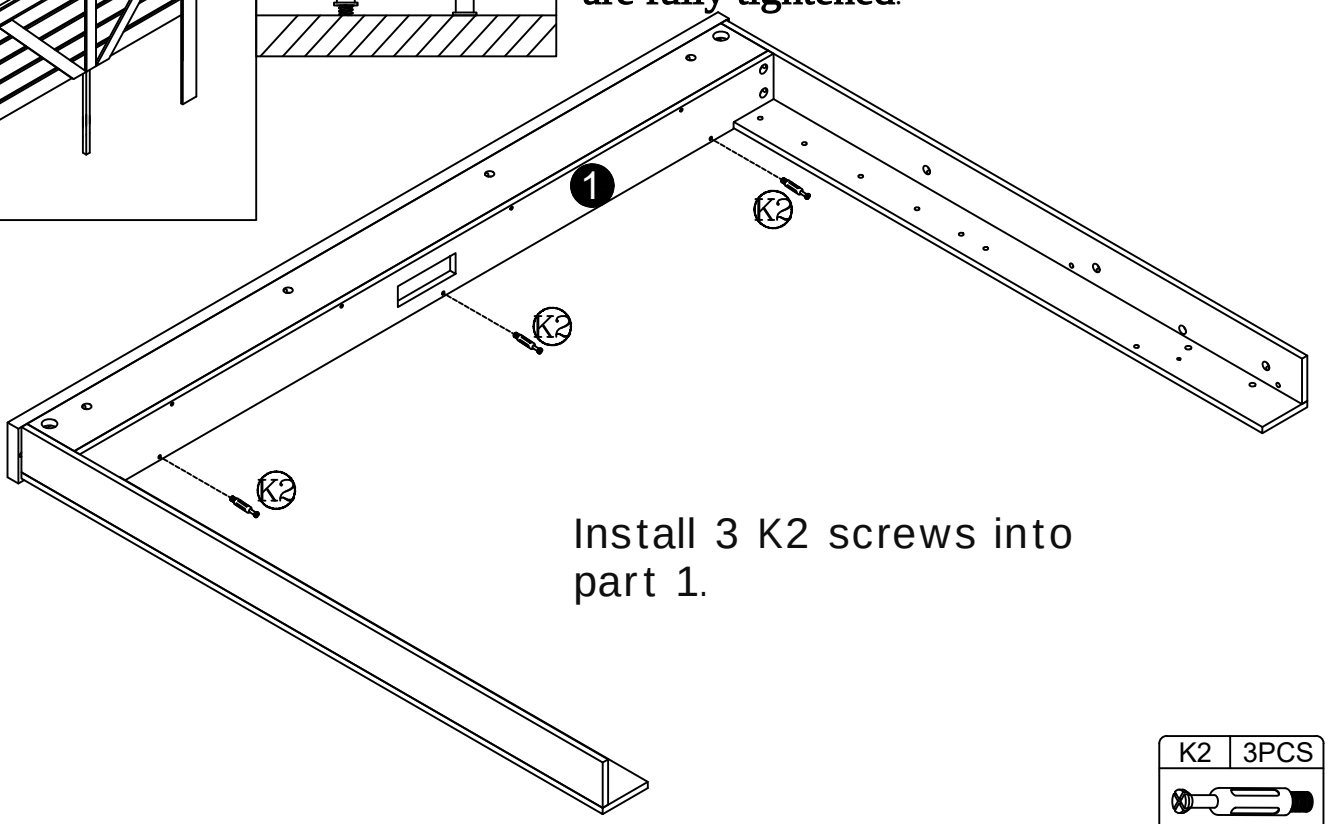

Install 3 K2 screws into part 1.

K2	3PCS
Ø7*40mm Ø9/32*1-37/64"	

Headboard Secton

Step 10

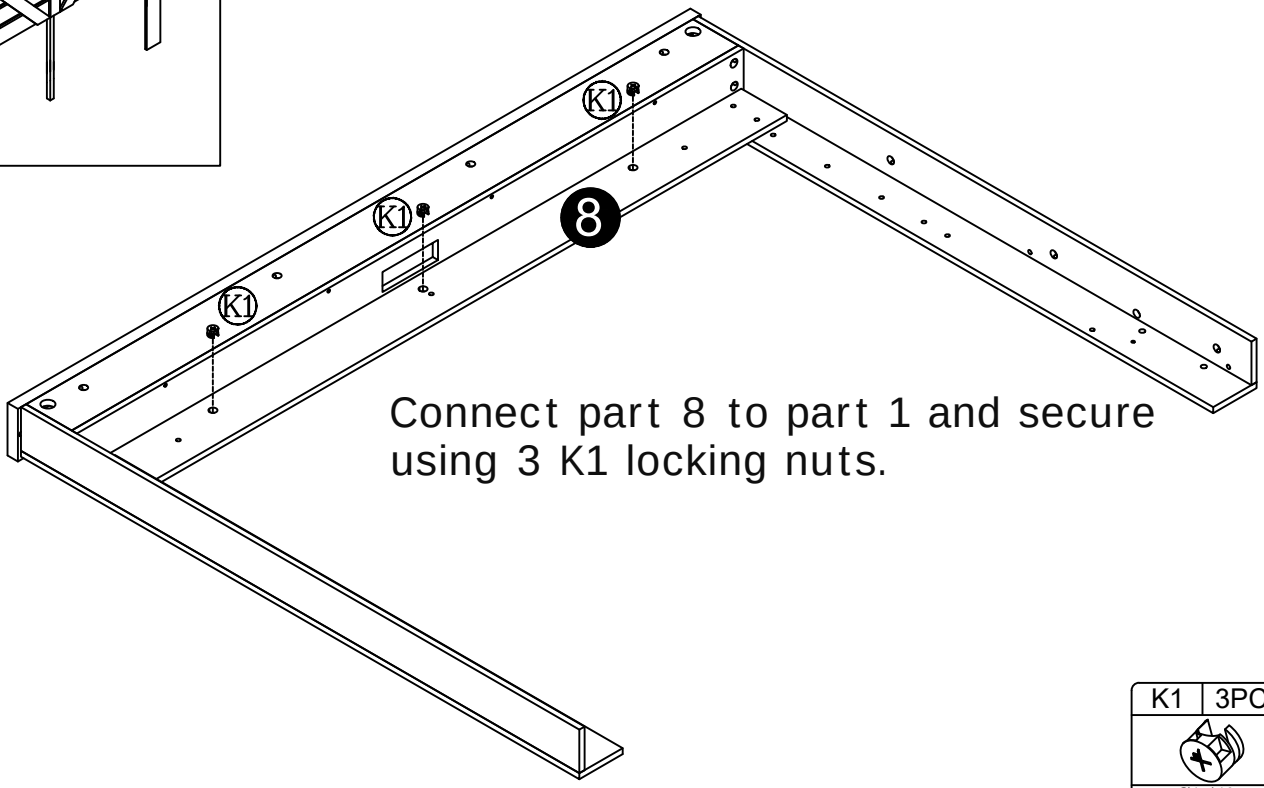

Connect part 8 to part 1 and secure using 3 K1 locking nuts.

K1	3PCS
Ø15*10mm Ø19/32*25/64"	

Headboard Secton

Step 11

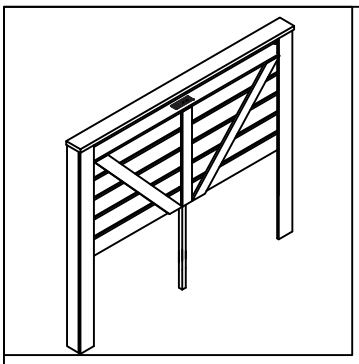

Note Ensure the holes on parts 8 12 align with the holes on parts 3 and 4 before tightening

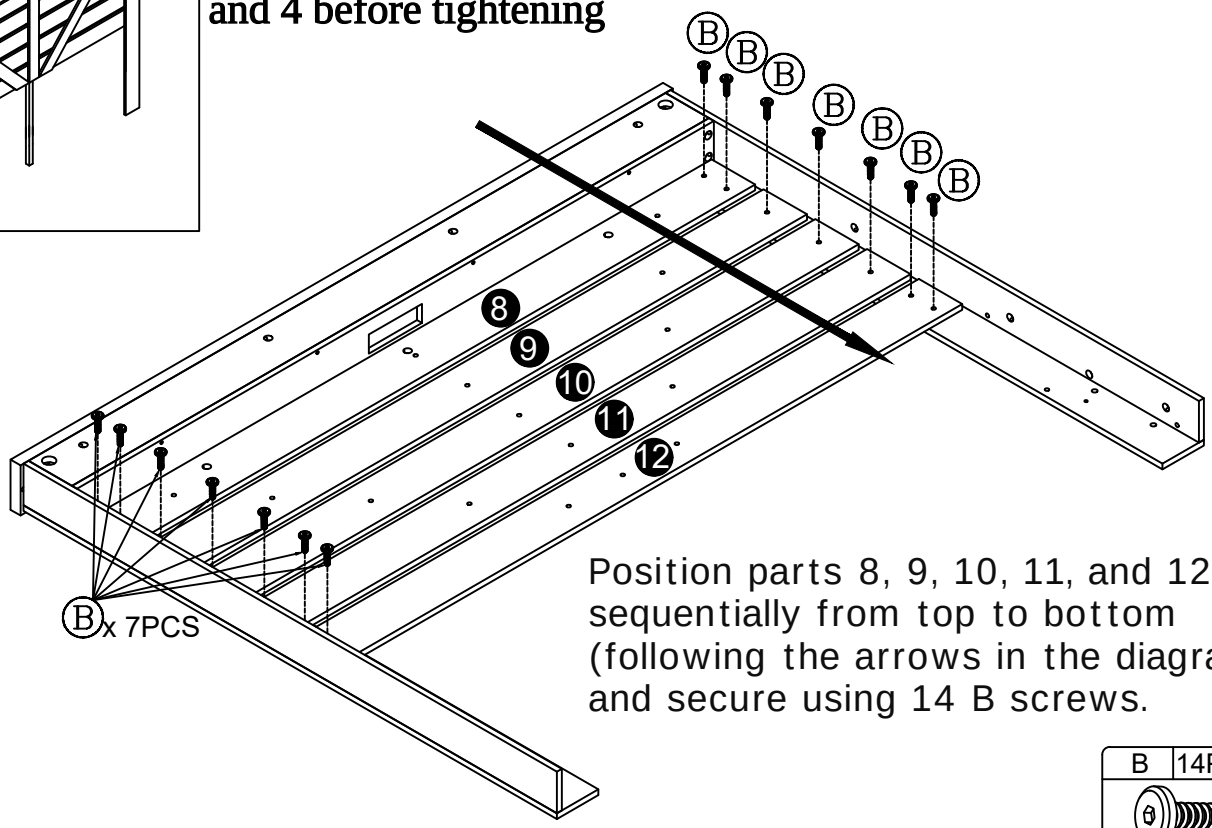

Position parts 8, 9, 10, 11, and 12 sequentially from top to bottom (following the arrows in the diagram) and secure using 14 B screws.

B	14PCS

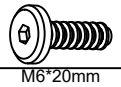

M6*20mm
Ø15/64*51/64"

Headboard Secton

Step 12

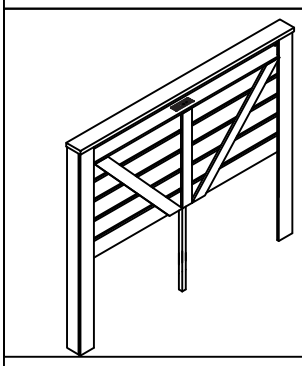

Please note that part 14 must be installed as shown in the diagram, or the screws will puncture part 13!

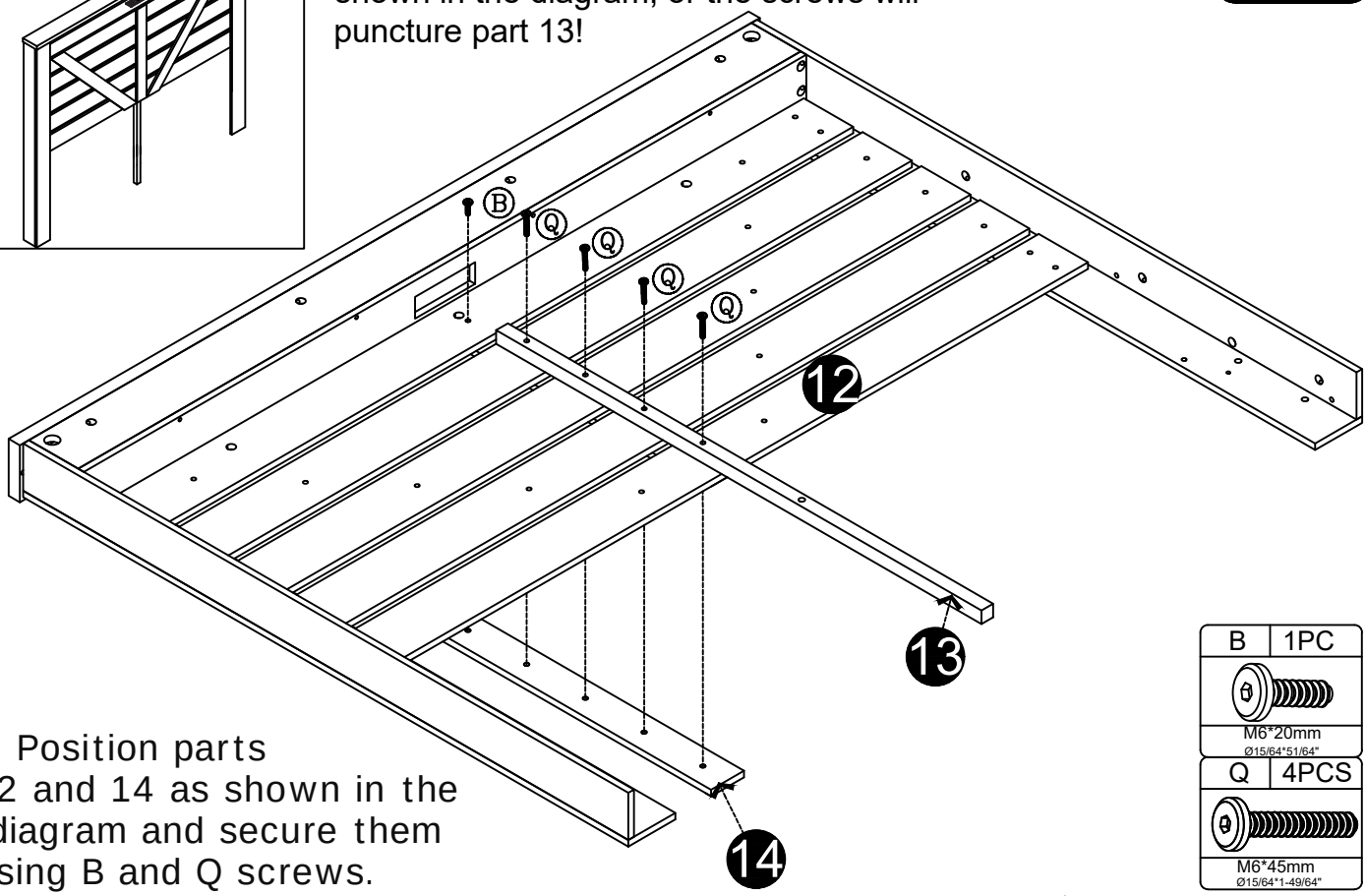

a. Position parts 12 and 14 as shown in the diagram and secure them using B and Q screws.

B	1PC

M6*20mm
Ø15/64*51/64"

Q	4PCS

M6*45mm
Ø15/64*1-49/64"

Headboard Secton

Step 13

Note： Ensure the rivet surfaces of parts 17 and 18 face upward.

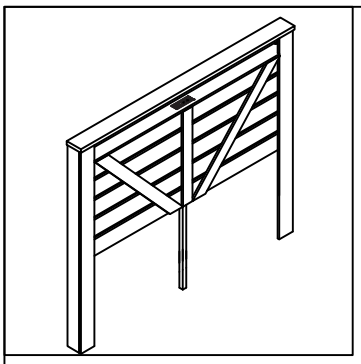

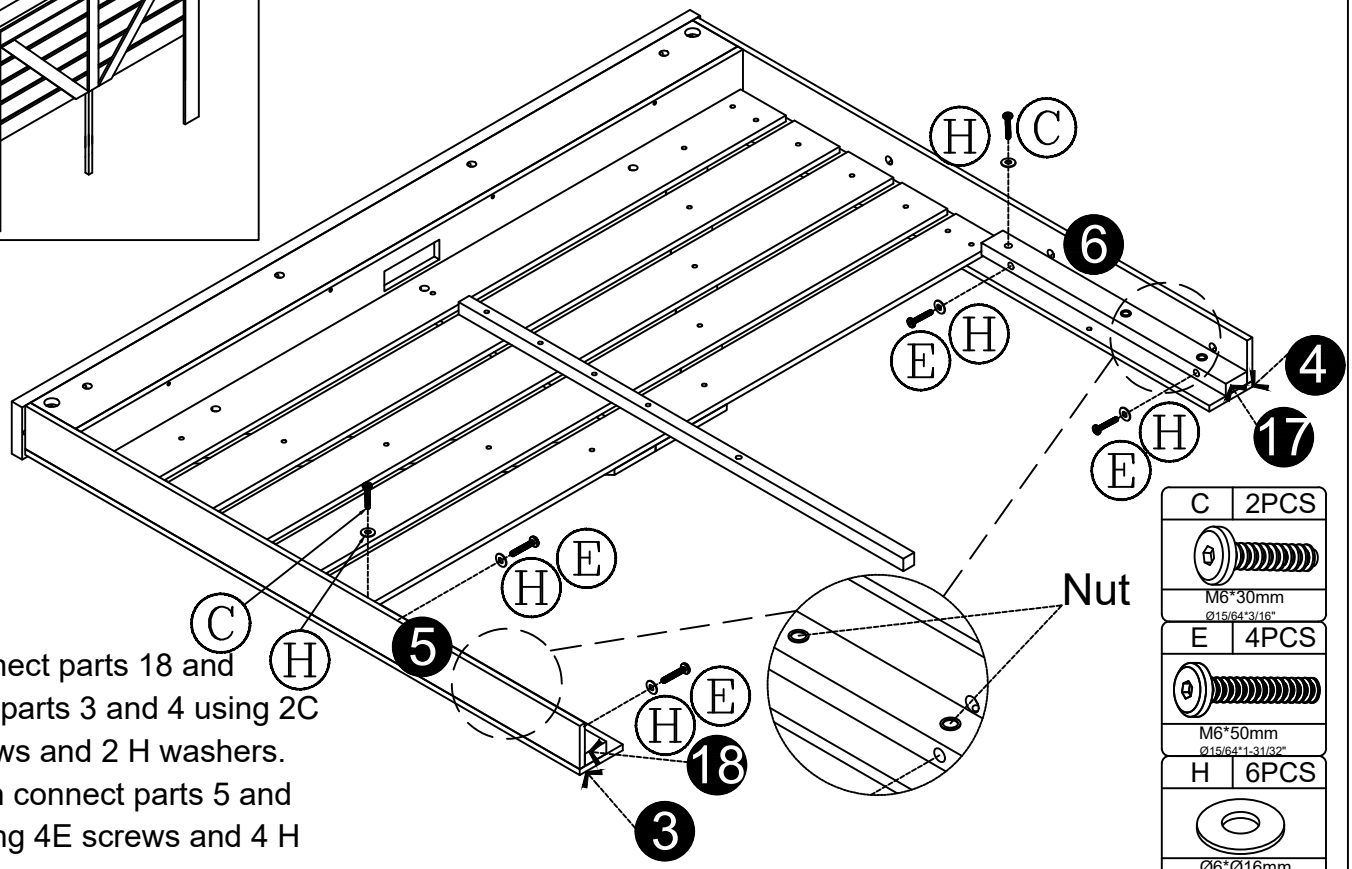

Connect parts 18 and 17to parts 3 and 4 using 2C screws and 2 H washers. Then connect parts 5 and 6using 4E screws and 4 H washers.

C	2PCS
M6*30mm Ø15/64*3/16"	
E	4PCS
M6*50mm Ø15/64*1-31/32"	
H	6PCS
Ø6*Ø16mm Ø16/64*19/32"	

Headboard Secton

Step 14

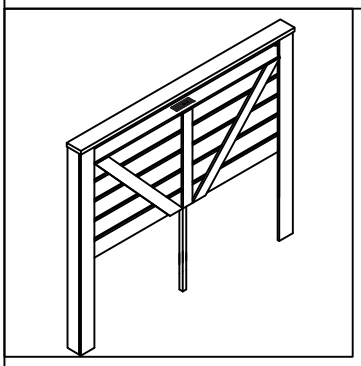

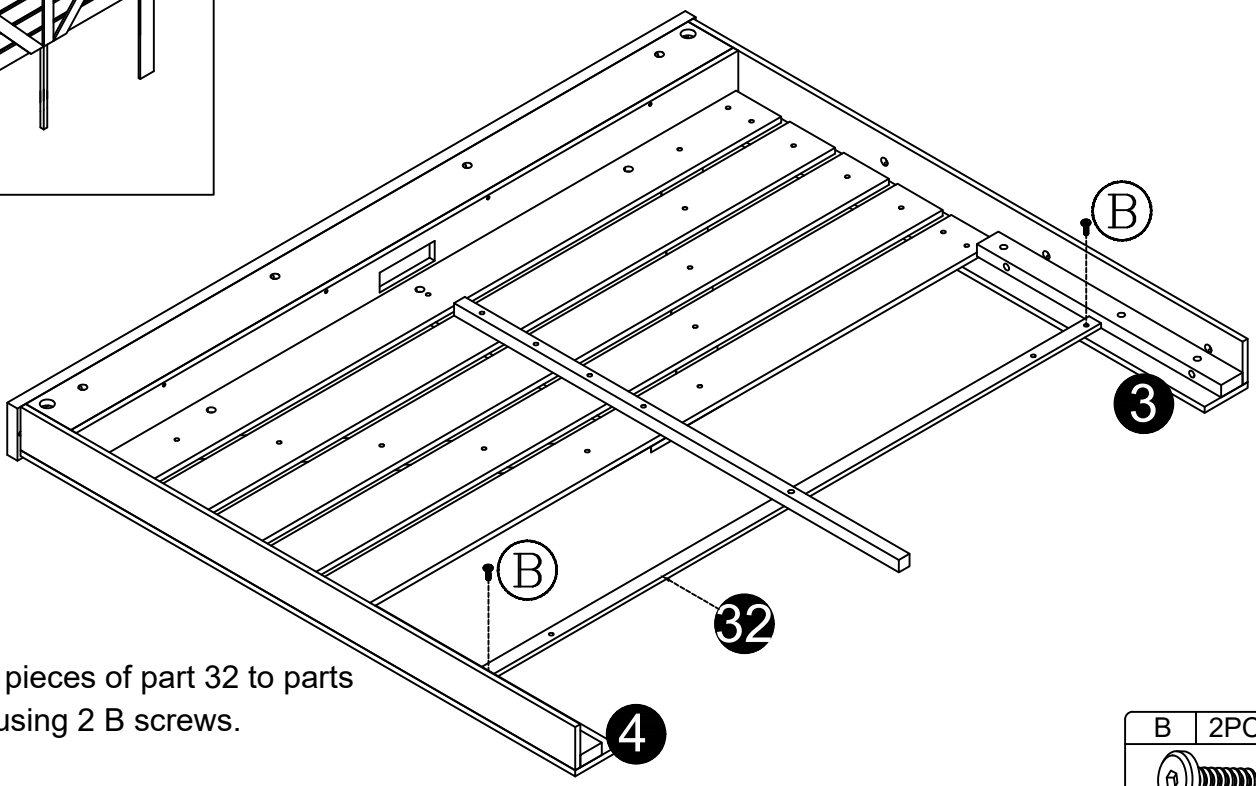

Attach 2 pieces of part 32 to parts 3 and 4 using 2 B screws.

B	2PCS
M6*20mm Ø15/64*51/64"	

FRAME PARTS SECTION

The frame assembly requires a total of 27 labeledpanels, asindicated inthediagram . Please identify and gather all the panels beforeprepareeding.

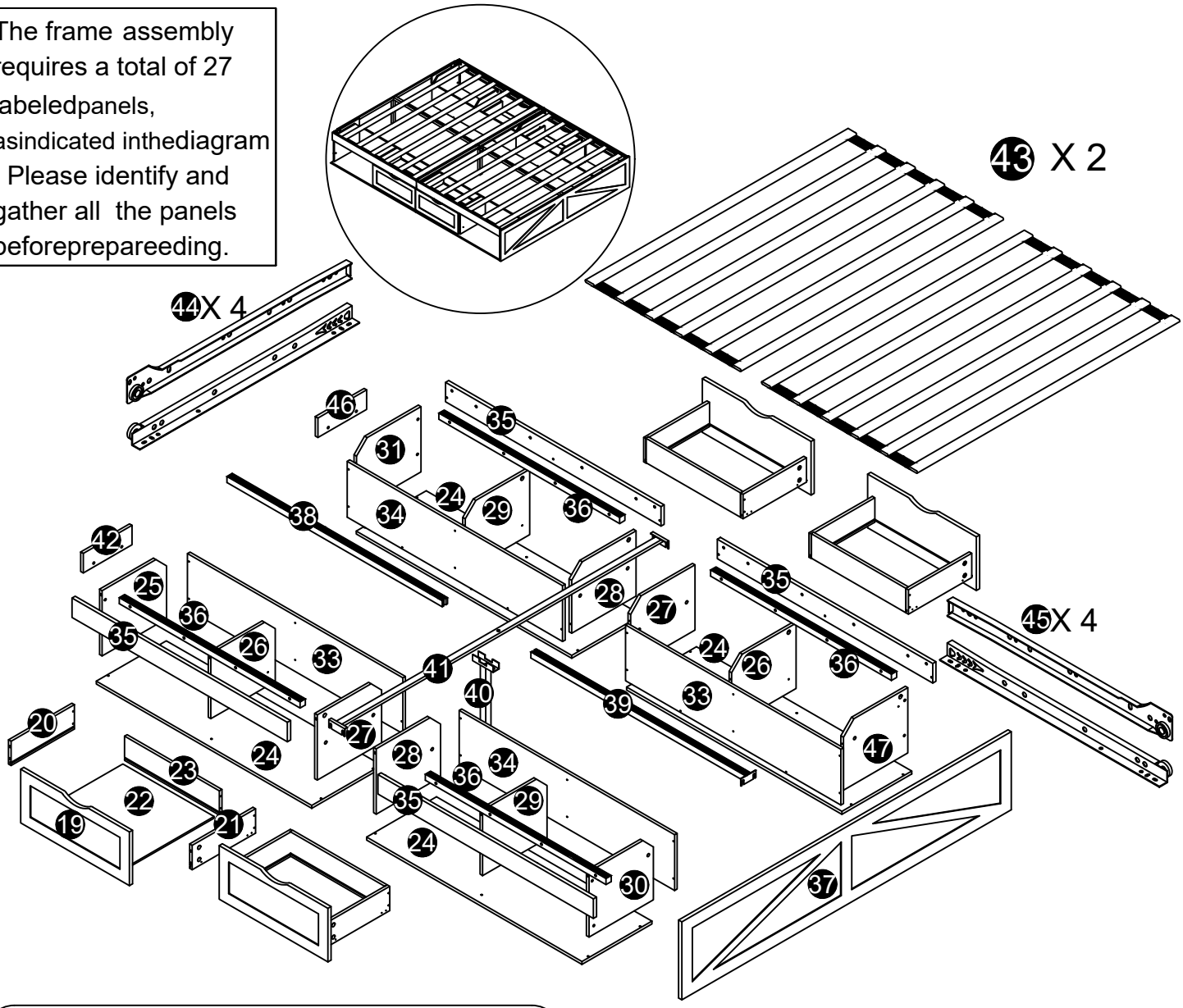

HARDWARE ACCESSORY LIST

A	Ø15/64*15/32" M6*11mm 18PCS		K1	Ø19/32*25/64" Φ6*30mm 30PCS	
B	Ø15/64*51/64" M6*20mm 26PCS		K2	Ø9/32*1-37/64" Φ7*40mm 28PCS	
D	Ø15/64*1-3/8" M6*35mm 16PCS		L	Ø13/64*1-37/64" M5*40mm 4PCS	
F	Ø5/16*1-3/8" M8*35mm 2PCS		O	1PC	
G	Ø5/16*1-31/32" M8*50mm 5PCS		P	Ø5/32*15/32" M4*12mm 42PCS	
H	Ø16/64*19/32" Ø6*Ø16mm 16PCS		Q	Ø15/64*1-49/64" M6*45mm 4PCS	
T	M8*50mm 5PCS		R	2PCS	

Frame Parts Section

Step 1

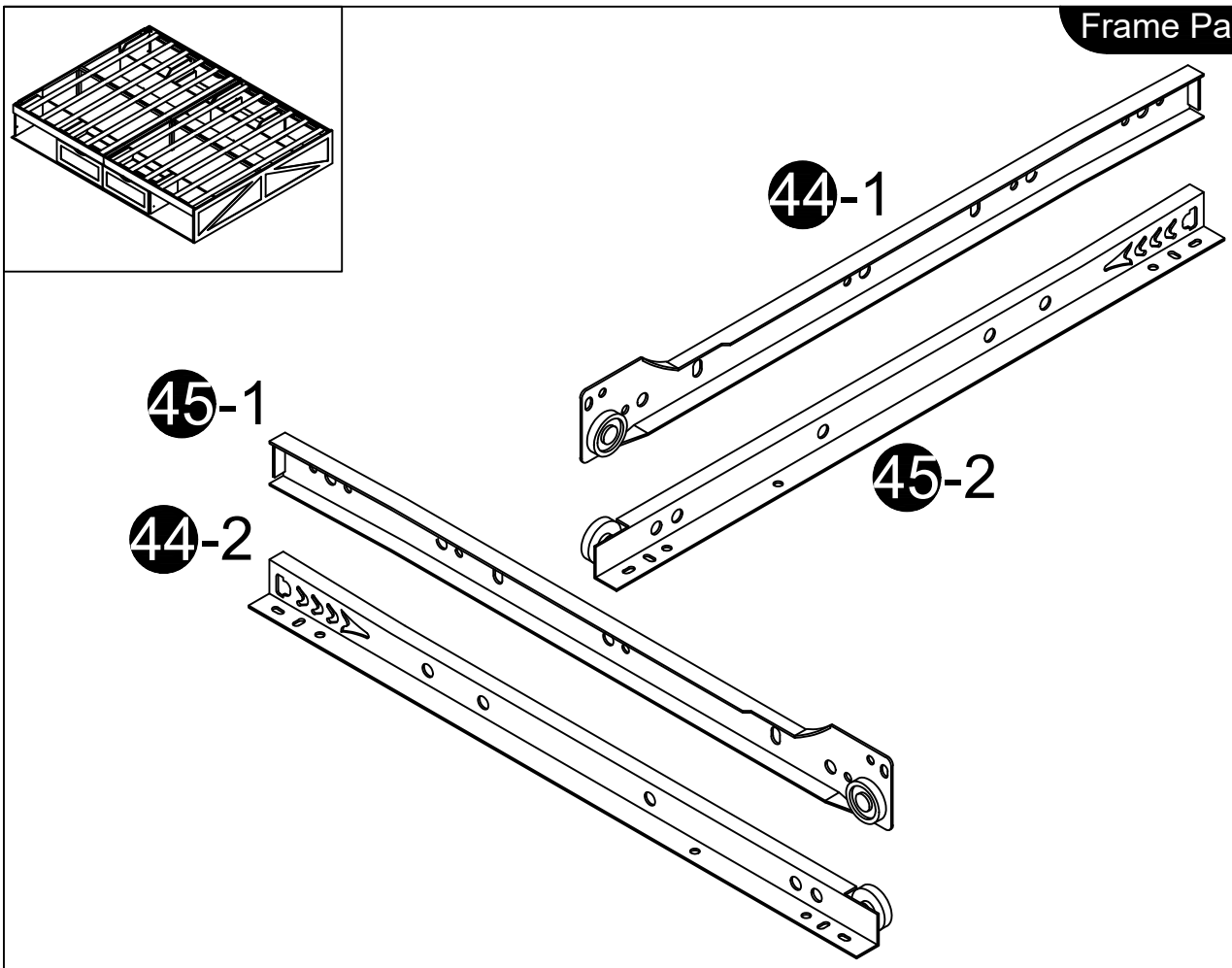

Frame Parts Section

Step 2

Note Ensure the concealed holes on the slide rails are correctly aligned.

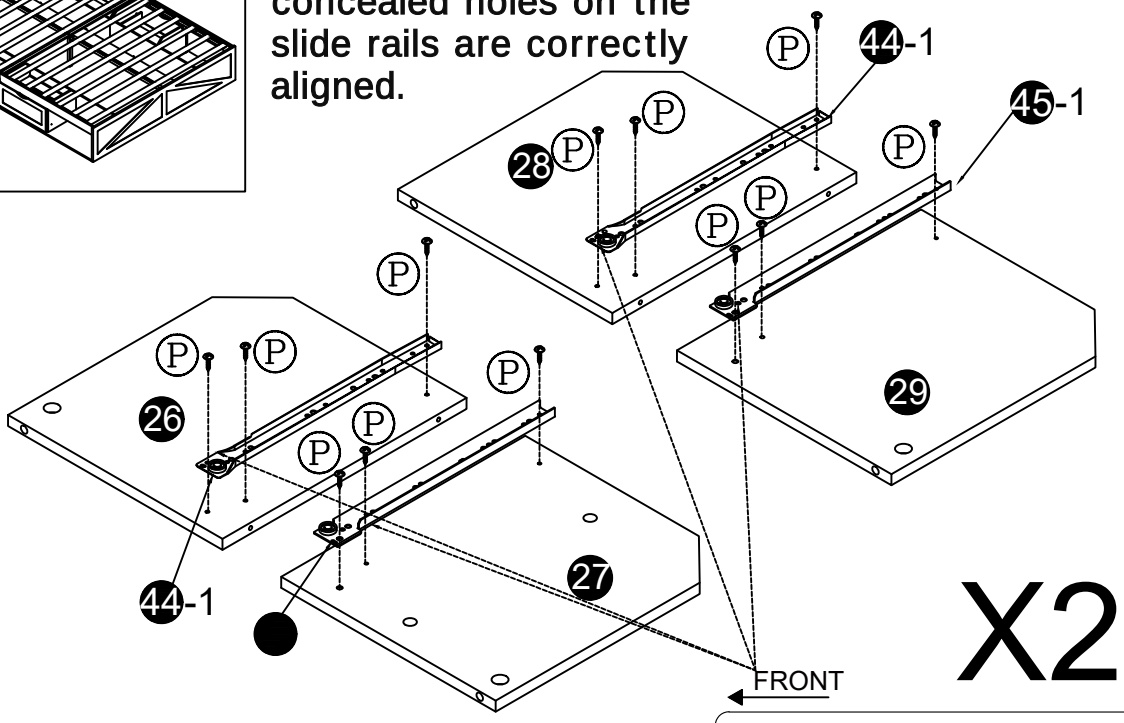

X2

Position parts 26, 27, 28, and 29 symmetrically as shown in the diagram. Connect parts 44-1 and 45-1 using 24 P screws (self-tapping).

P	24PCS

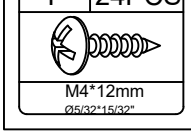

M4*12mm
Ø5/32*15/32"

Attention:
1. Please locate the holes from the back of part 44-1.

44-1/45-1
Back:

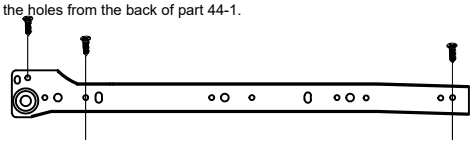

Frame Parts Section

Step 3

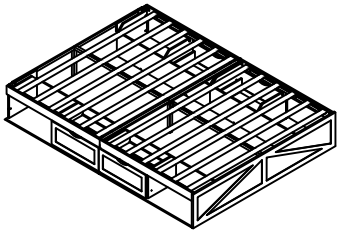

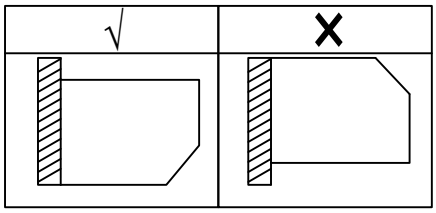

The installation directions of parts 25, 26, and 27 must be as shown in the diagram.

Note Ensure the concealed holes on the slide rails are correctly aligned.

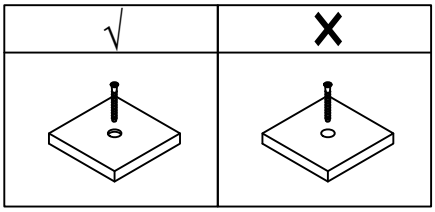

The shape of the hole facing the screws on part 24 must be as shown in the diagram.

L	6PCS
M5*40mm Ø13/64*1-37/64"	

Frame Parts Section

Step 4

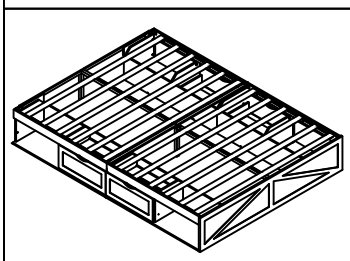

Attach part 33 to the frame using 8 L screws.

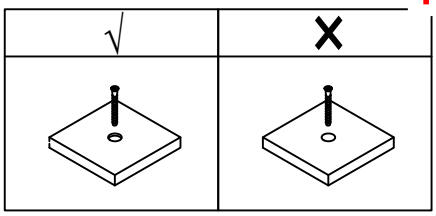

The shape of the hole facing the screws on part 33 must be as shown in thediagram.

L	8PCS
M5*40mm Ø13/64*1-37/64"	

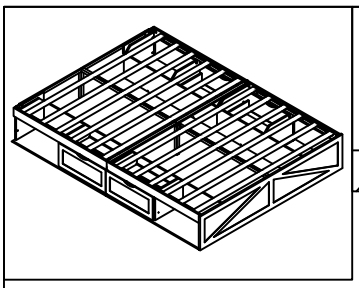

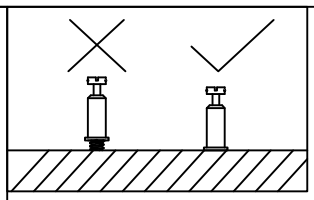

Frame Parts Section

Step 5

Note Ensure all screws are fully tightened

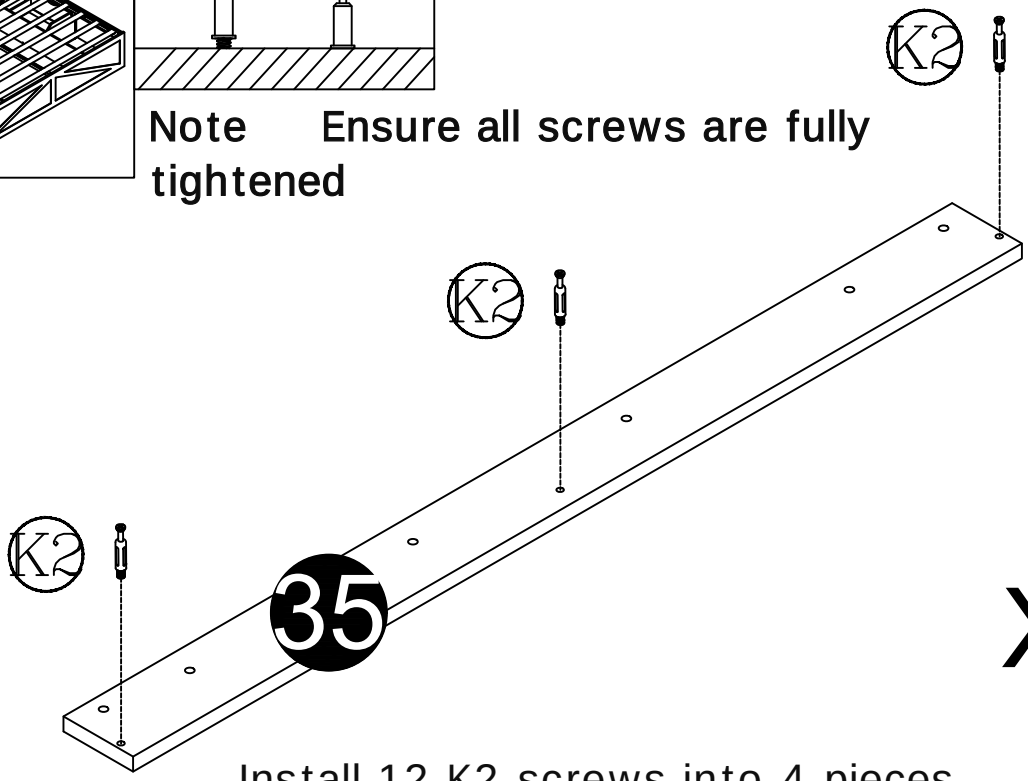

X 4

Install 12 K2 screws into 4 pieces of part 35.

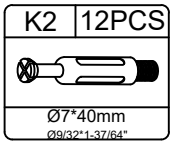

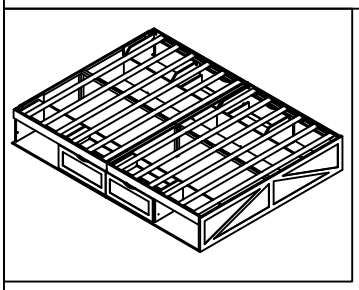

Frame Parts Section

Step 6

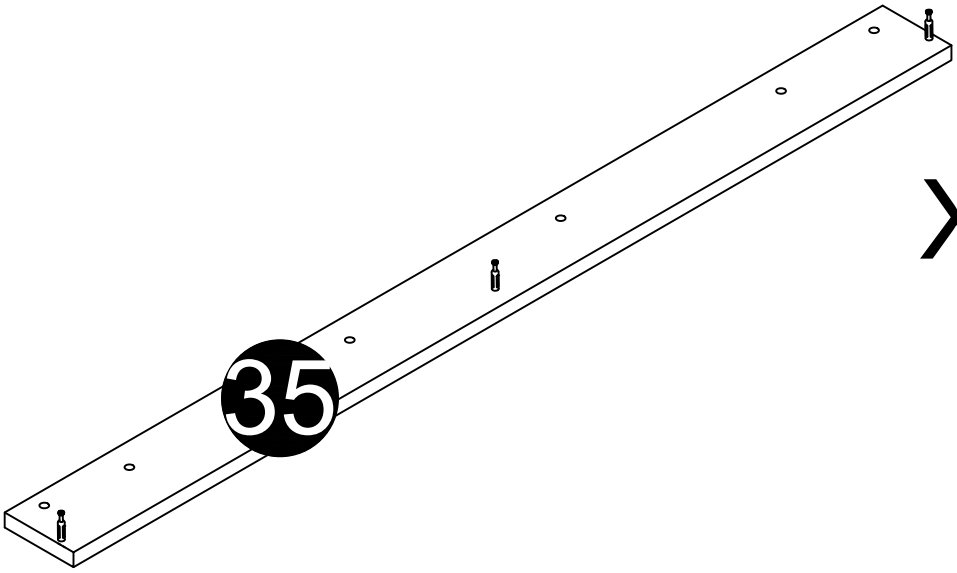

X 4

Frame Parts Section

Step 7

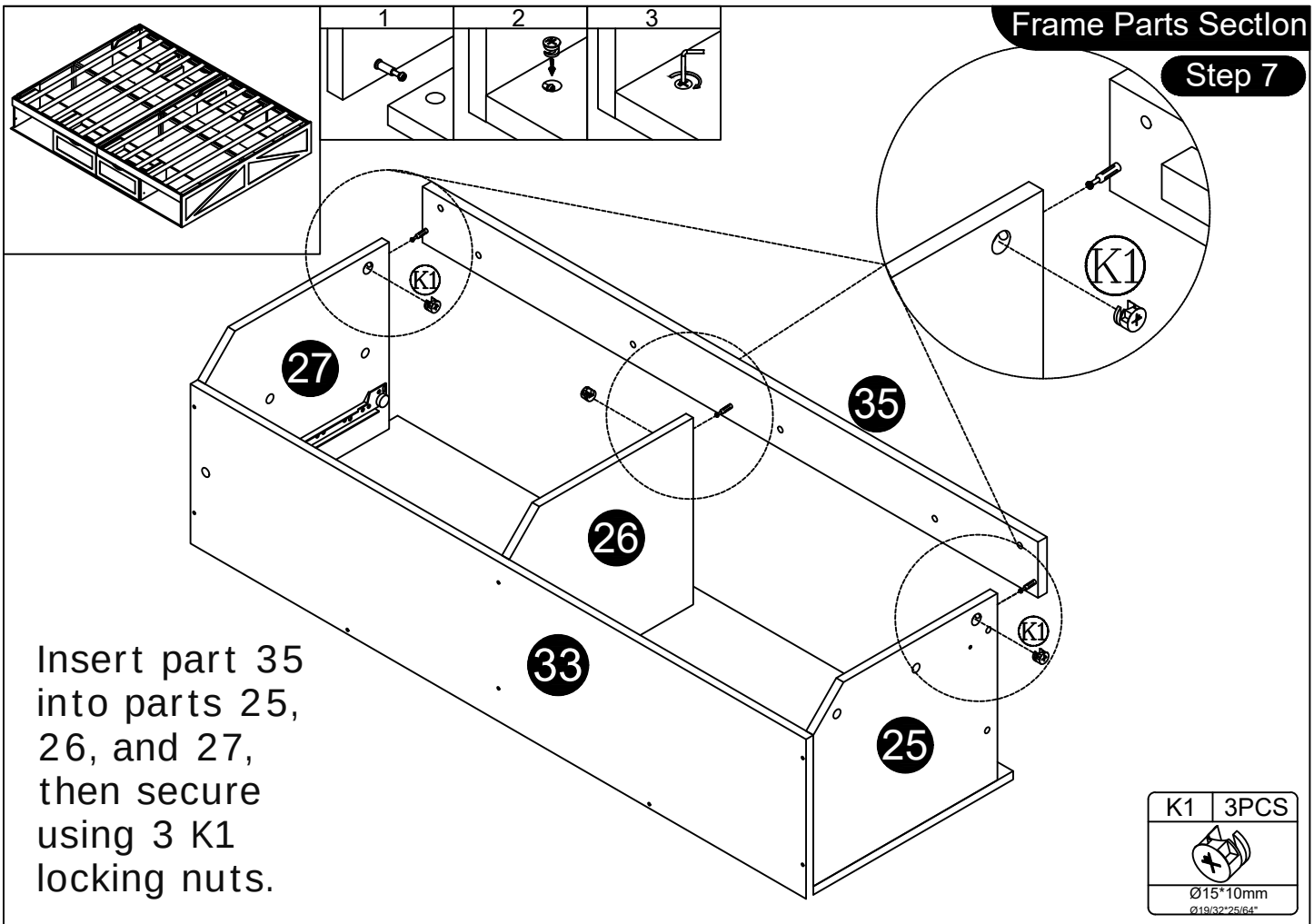

Insert part 35 into parts 25, 26, and 27, then secure using 3 K1 locking nuts.

K1	3PCS
Ø15*10mm Ø19/32*25/64"	

Frame Parts Section

Step 8

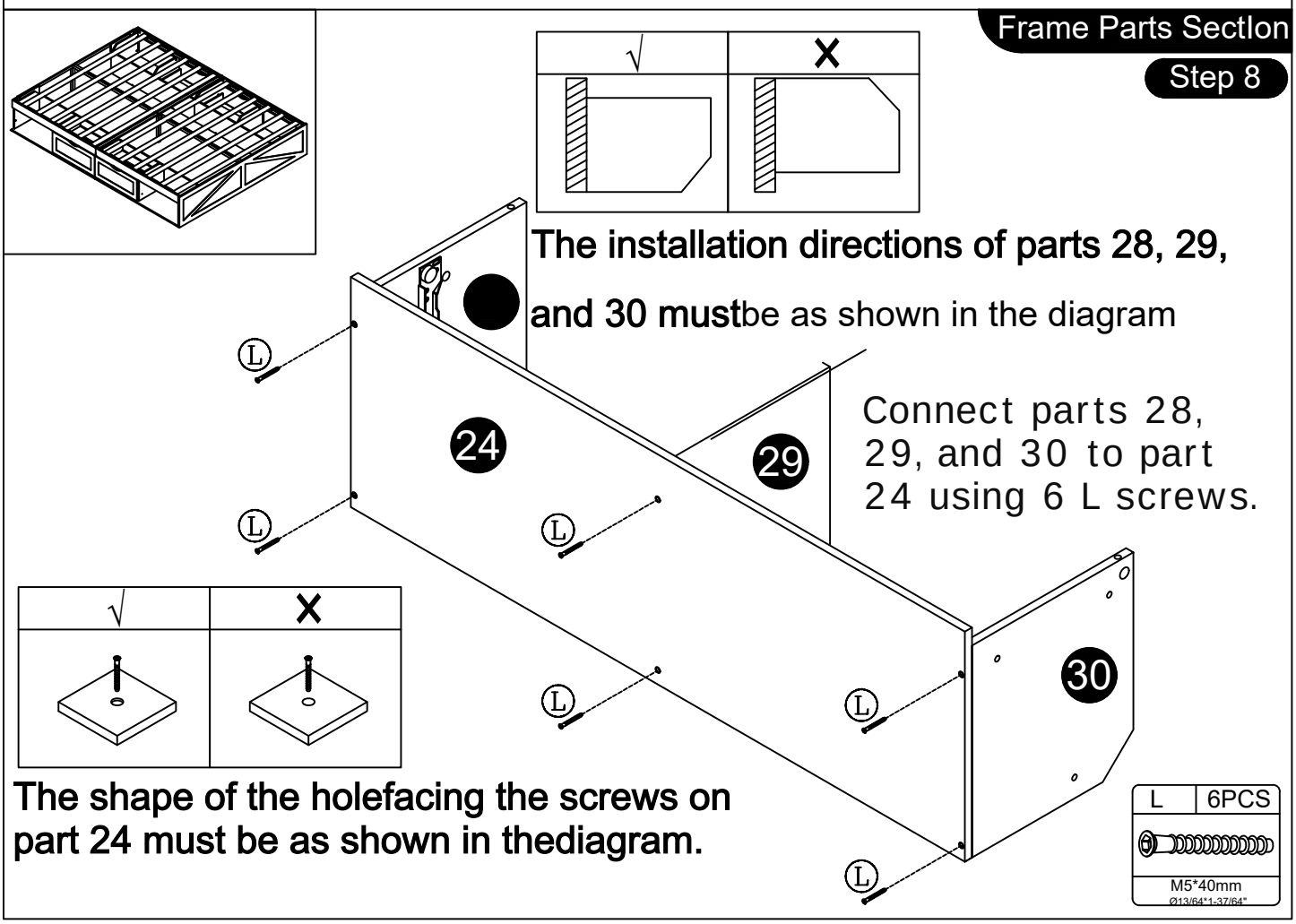

The installation directions of parts 28, 29, and 30 must be as shown in the diagram

Connect parts 28, 29, and 30 to part 24 using 6 L screws.

The shape of the holefacing the screws on part 24 must be as shown in thediagram.

L	6PCS
M5*40mm Ø13/64*1-37/64"	

Frame Parts Section

Step 9

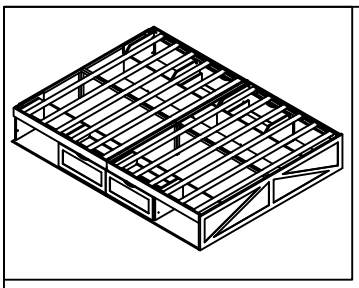

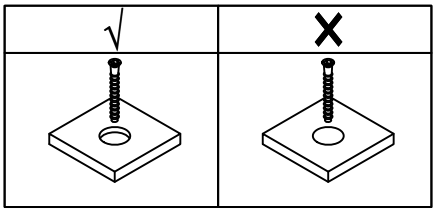

The shape of the holefacing the screws on part 34 must be as shown in the diagram.

Attach part 34 to the frame using 8 L screws.

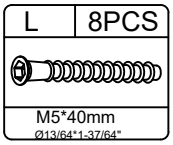

Frame Parts Section

Step 10

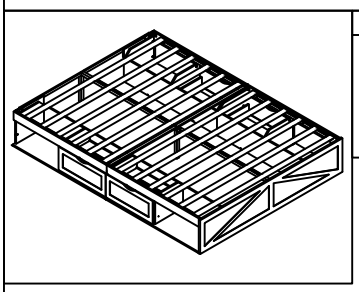

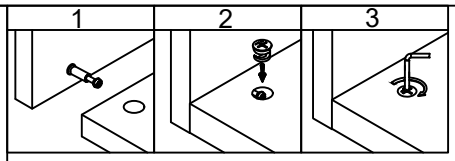

Insert part 35 into parts 28, 29, and 30, then secure using 3 K1 locking nuts.

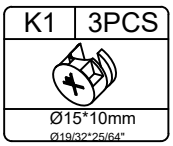

Frame Parts Section

Step 11

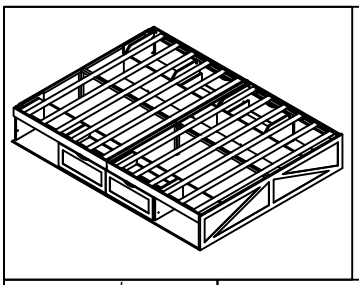

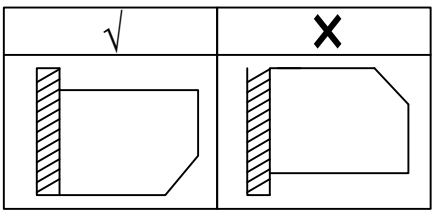

The installation directions of parts 28, 29, and 31 must be as shown in the diagram.

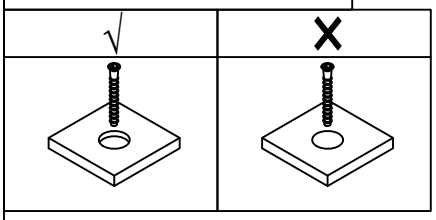

The shape of the hole facing the screws on part 24 must be as shown in the diagram.

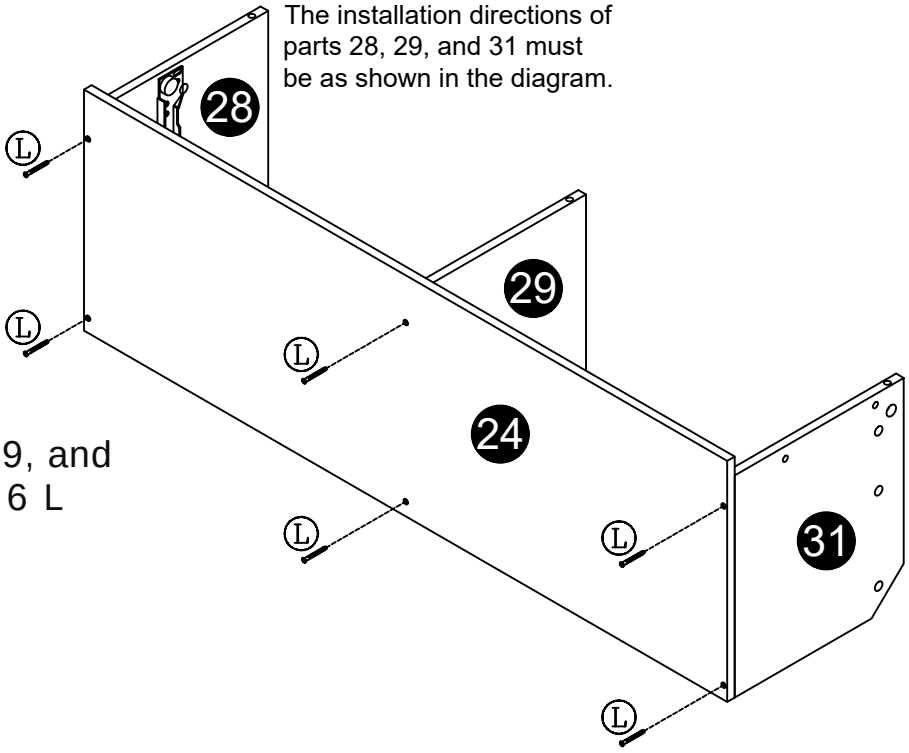

Connect parts 28, 29, and 31 to part 24 using 6 L screws

L	6PCS
M5*40mm Ø13/64*1-37/64"	

Frame Parts Section

Step 12

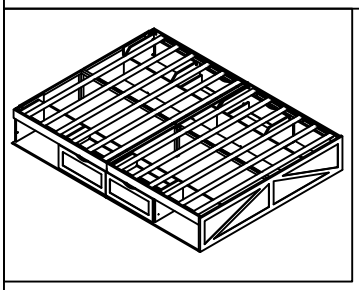

Attach part 34 to the frame using 8 L screws.

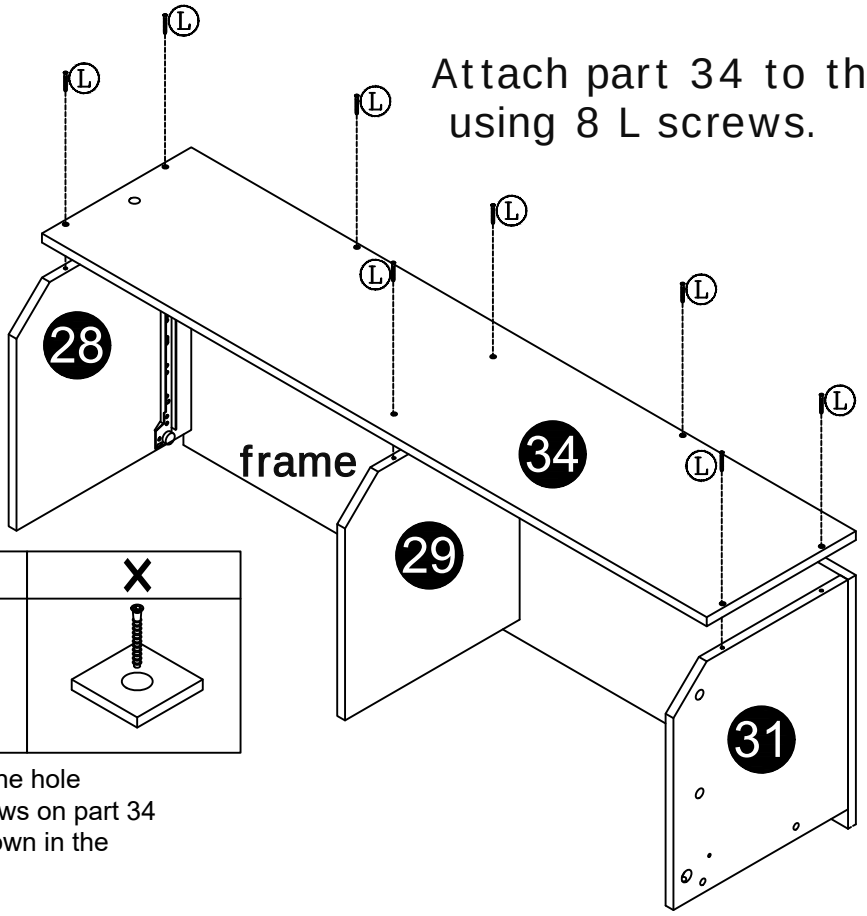

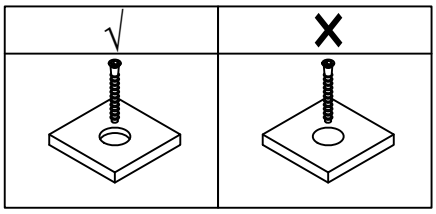

The shape of the hole facing the screws on part 34 must be as shown in the diagram.

L	8PCS
M5*40mm Ø13/64*1-37/64"	

Frame Parts Section

Step 13

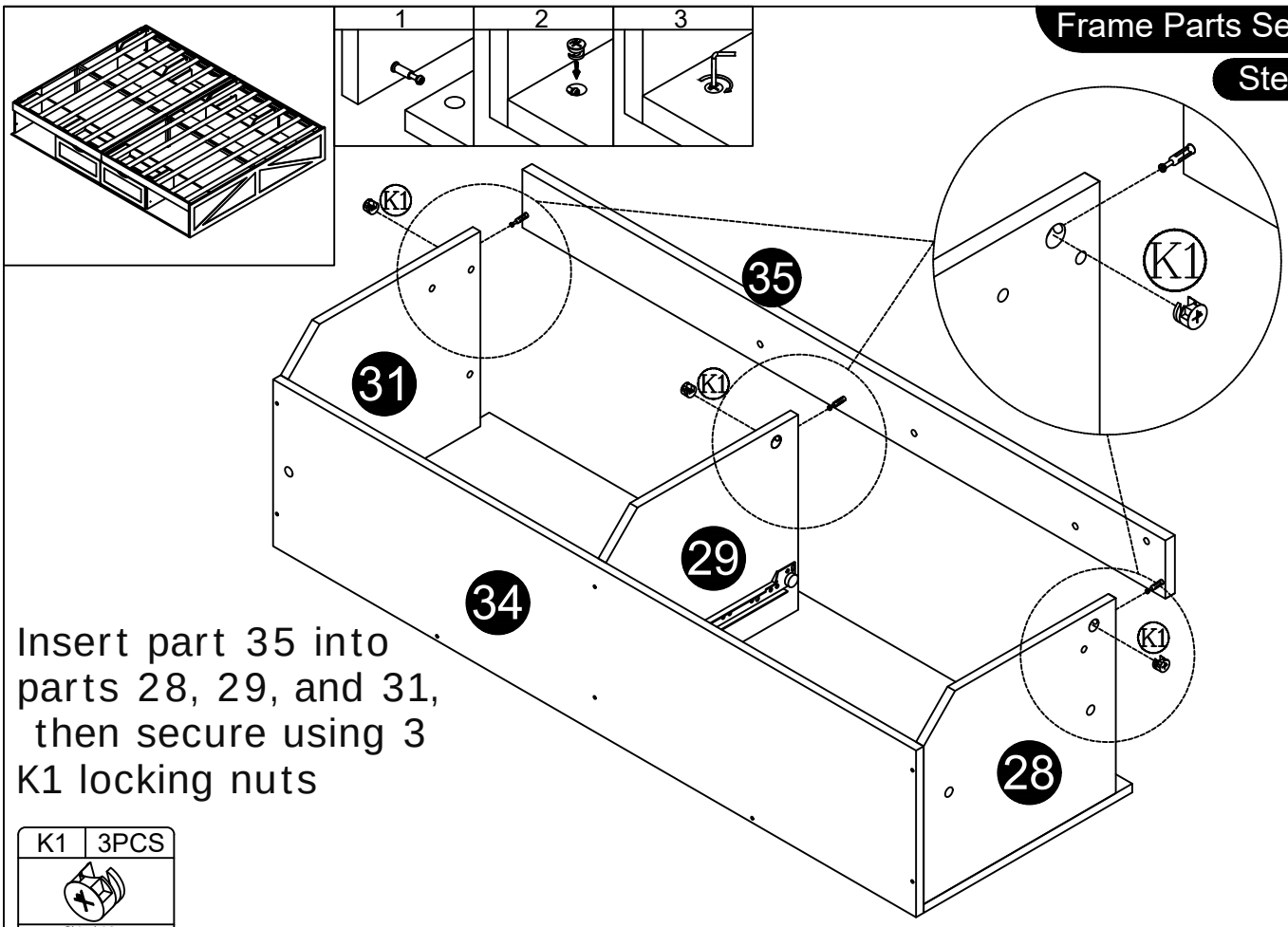

Insert part 35 into parts 28, 29, and 31, then secure using 3 K1 locking nuts

K1	3PCS
Ø15*10mm Ø19/32*25/64"	

Frame Parts Section

Step 14

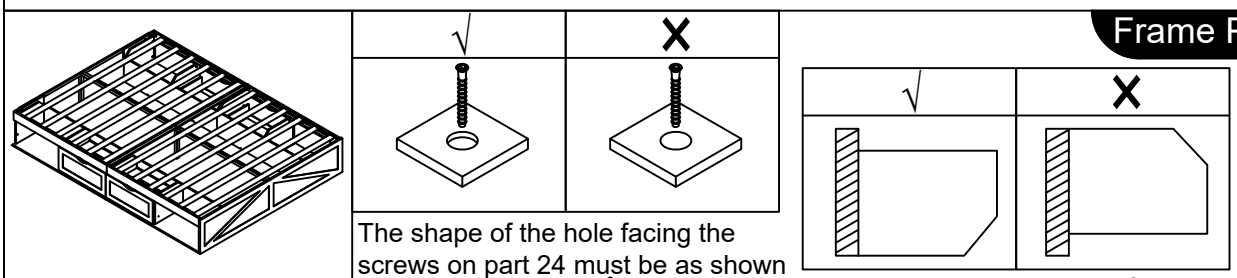

The shape of the hole facing the screws on part 24 must be as shown in the diagram.

The installation directions of parts 26, 27, and 47 must be as shown in the diagram.

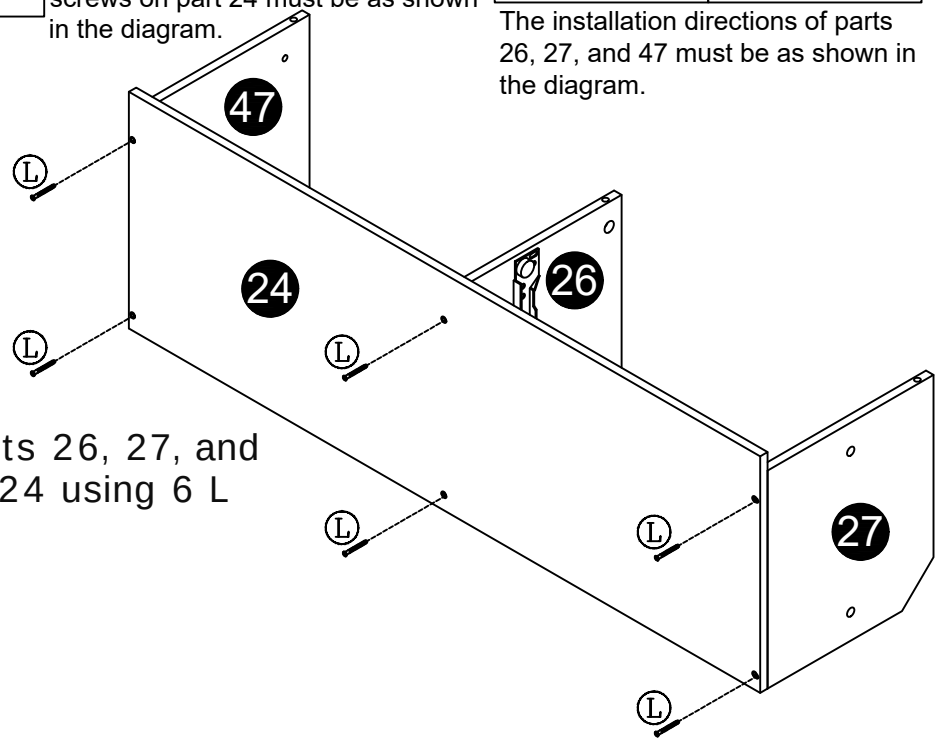

Connect parts 26, 27, and 47 to part 24 using 6 L screws.

L	6PCS
M5*40mm Ø13/64*1-37/64"	

Frame Parts Section

Step 15

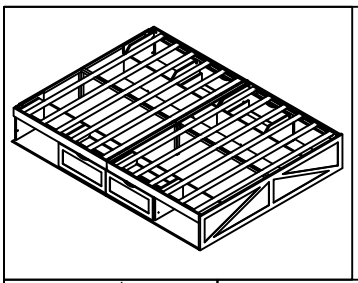

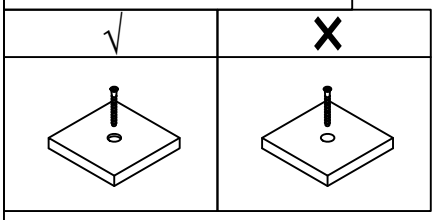

The shape of the hole facing the screws on part 33 must be as shown in the diagram.

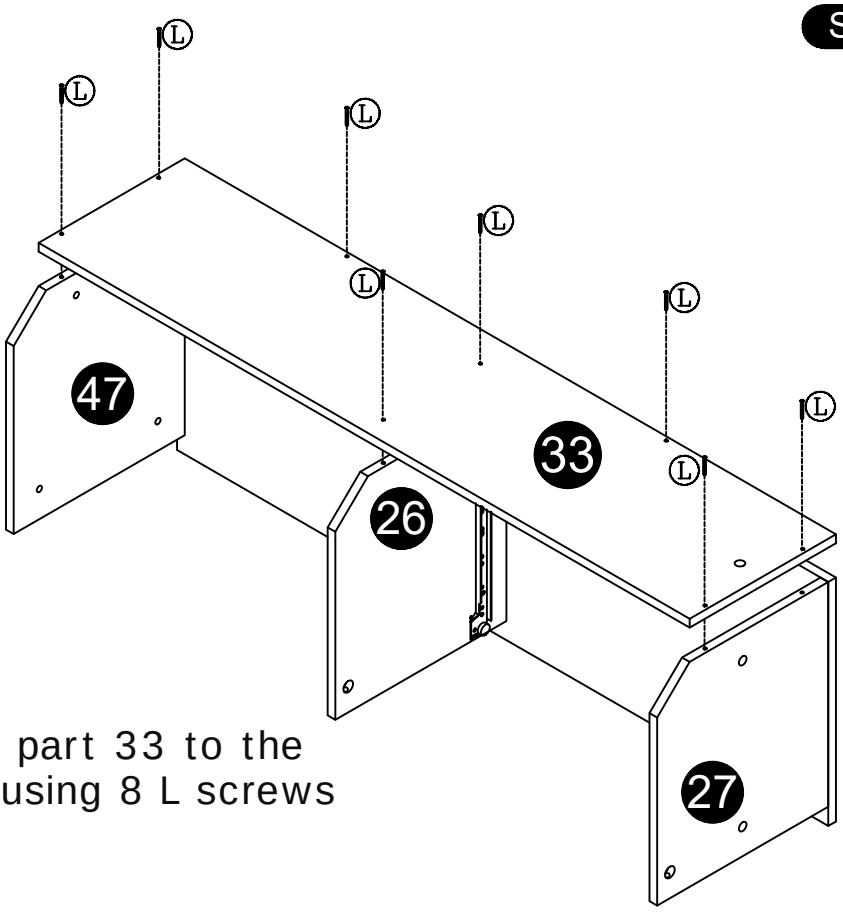

Attach part 33 to the frame using 8 L screws

L	8PCS
M5*40mm Ø13/64*1-37/64"	

Frame Parts Section

Step 16

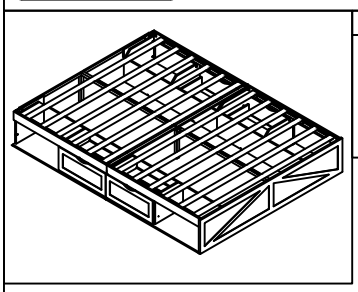

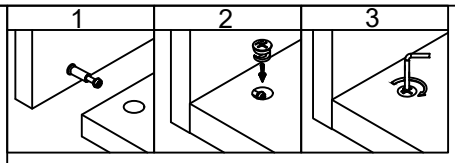

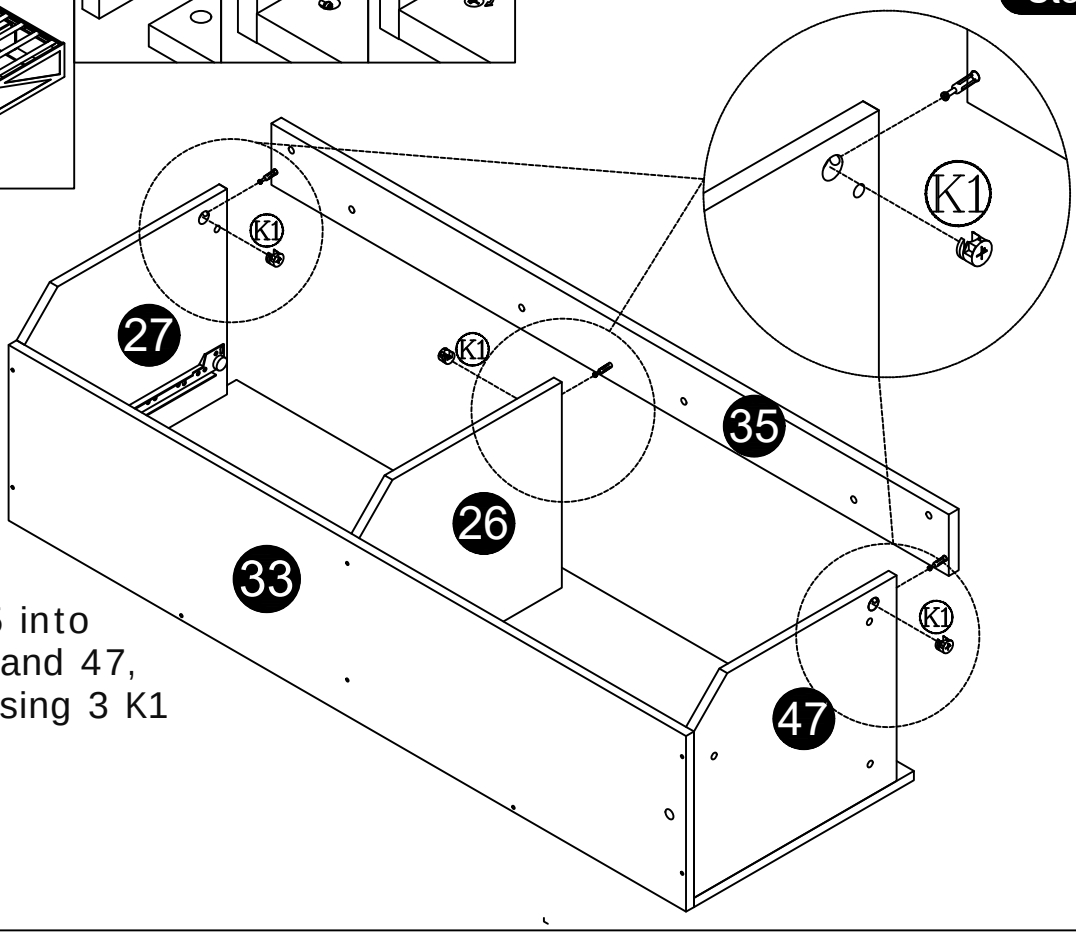

Insert part 35 into parts 26, 27, and 47, then secure using 3 K1 locking nuts.

K1	3PCS
Ø15*10mm Ø19/32*25/64"	

Frame Parts Section

Step 17

Note Ensure all holes are properly aligned.

a. Align the holes on the four drawer frames and secure using 4 B screws.

b. Use 2 R metal plates and 4 A screws to reinforce the bed frame.

A	4PCS
M6*11mm Ø15/64*15/32"	
B	4pcs
M6*20mm Ø15/64*51/64"	
R	2PCS

Frame Parts Section

Step 18

a. Connect parts 30 and 47 to part 37 using 6 B screws

b. Attach part 48 to parts 35 and 37 using 2 A screws, as shown in the diagram.

A	4PCS
M6*11mm Ø15/64*15/32"	
B	6PCS
M6*20mm Ø15/64*51/64"	
Q	2PCS

Frame Parts Section

Step 19

Connect parts 42 and 46 to parts 25 and 31 using 4 B screws.

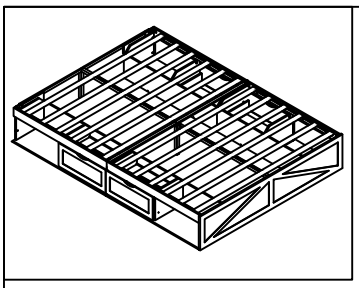

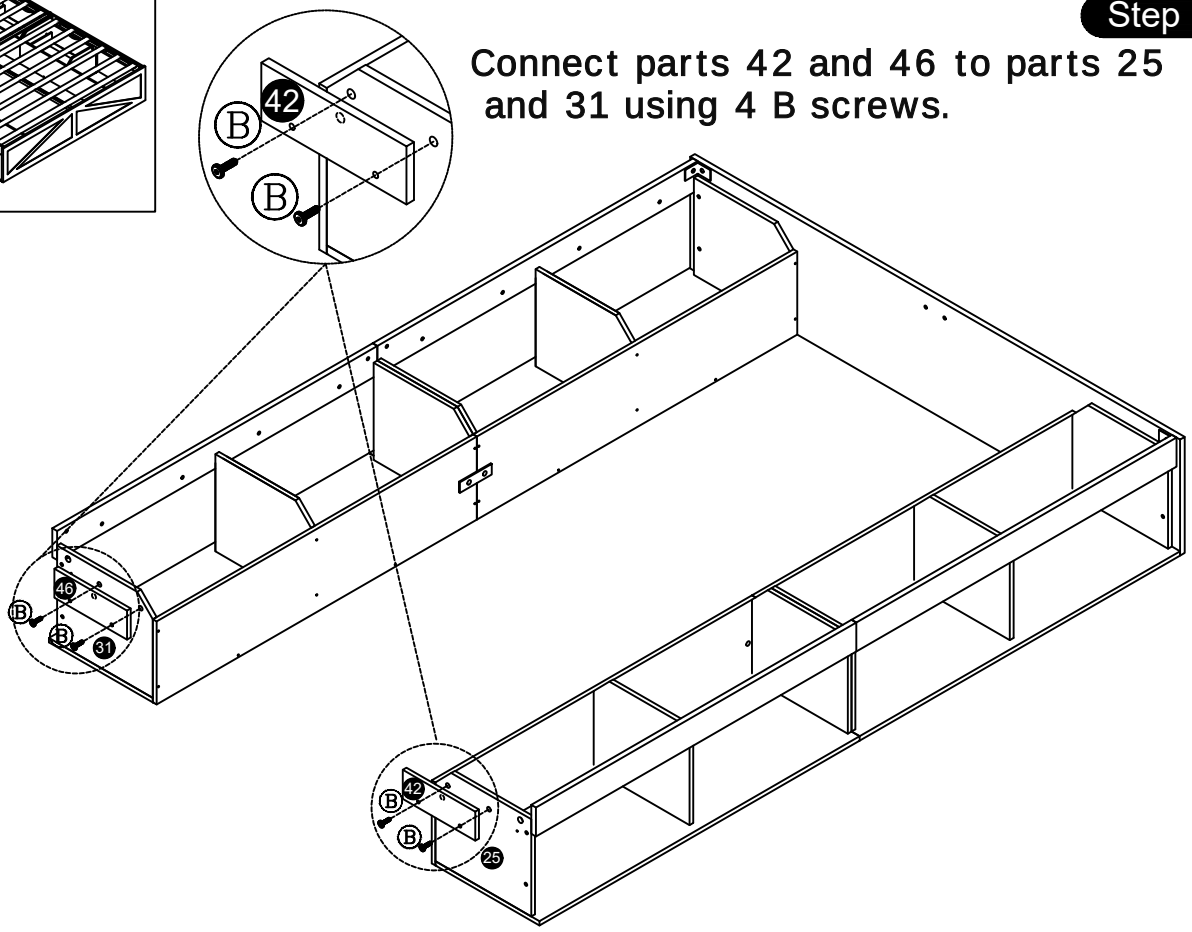

B	4PCS
M6*20mm Ø15/64*51/64"	

Frame Parts Section

Step 20

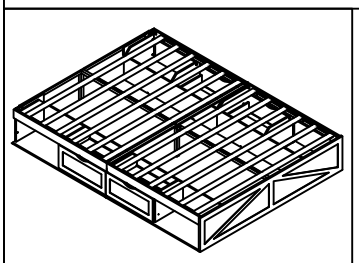

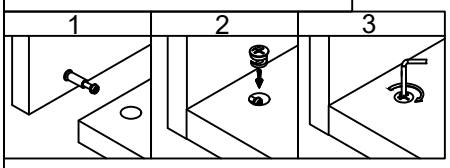

a. Secure 2 K1 locking nuts as shown in the diagram.

b. Connect parts 25 and 31 to parts 3 and 4 using 4 G screws.

c. Connect parts 3 and 4 to part 25 using 4 A screws

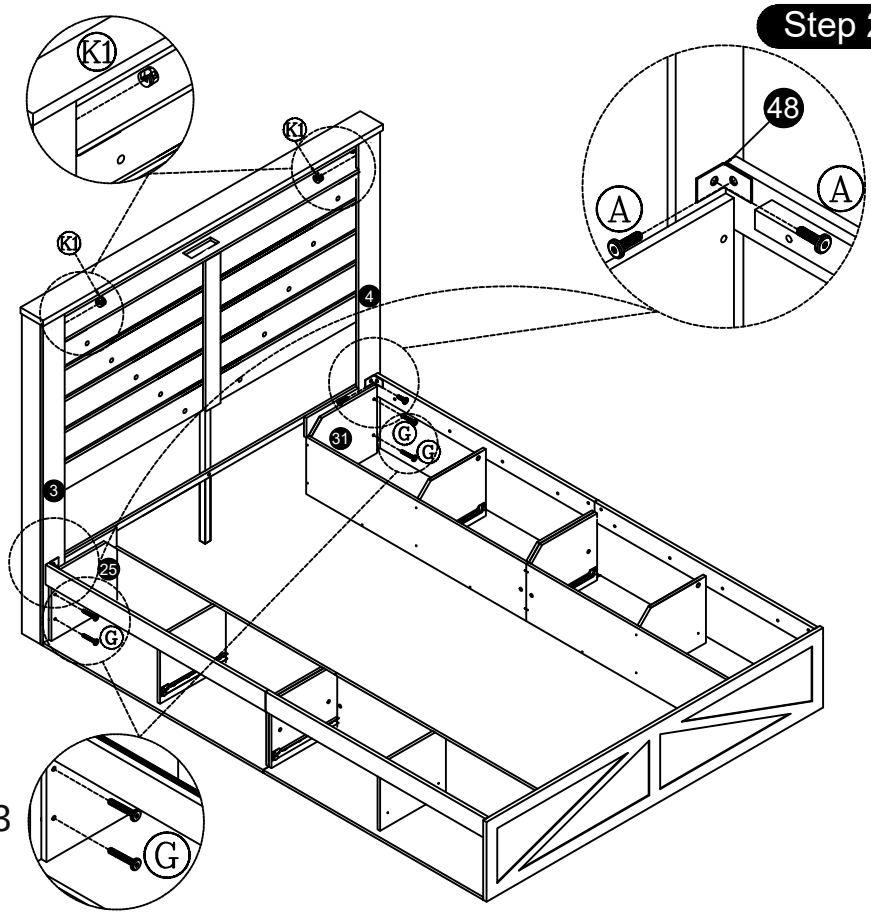

A	4PCS
M6*11mm Ø15/64*15/32"	

G	4PCS
M8*50mm Ø5/16*1-31/32"	

K1	2PCS
Ø15*10mm Ø19/32*25/64"	

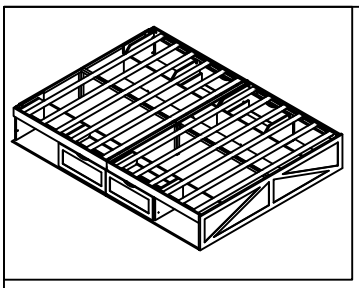

Frame Parts Section

Step 21

Note Ensure the rubber pads on parts 38 and 39 face upward

Position parts 38, 39, and 40 as shown in the diagram and secure using 2 F screws.

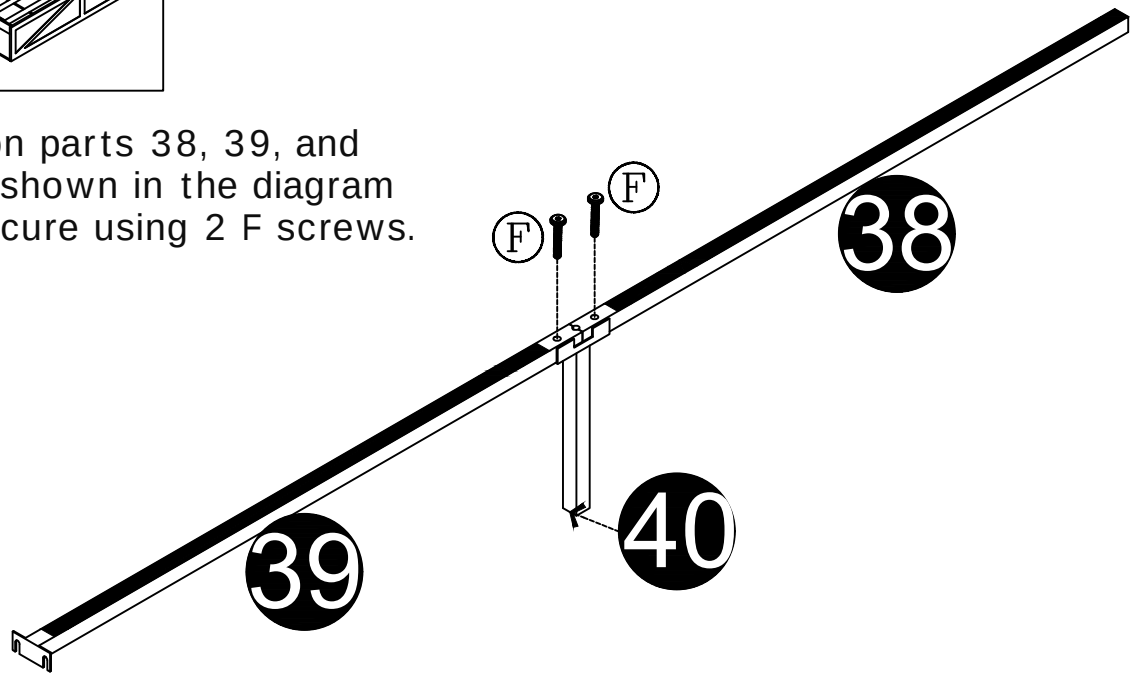

F	2PCS
M8*35mm Ø5/16*1-3/8"	

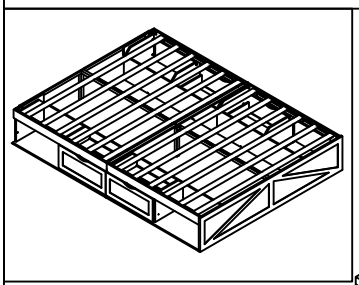

Frame Parts Section

Step 22

c. Secure part O to part 1 using 2 P screws.

a. Connect part 36 to part 35 using 16 D screws and 16 H washers.

Do not tighten screw A at first, tighten screw Aafter the bracket is hung on it.

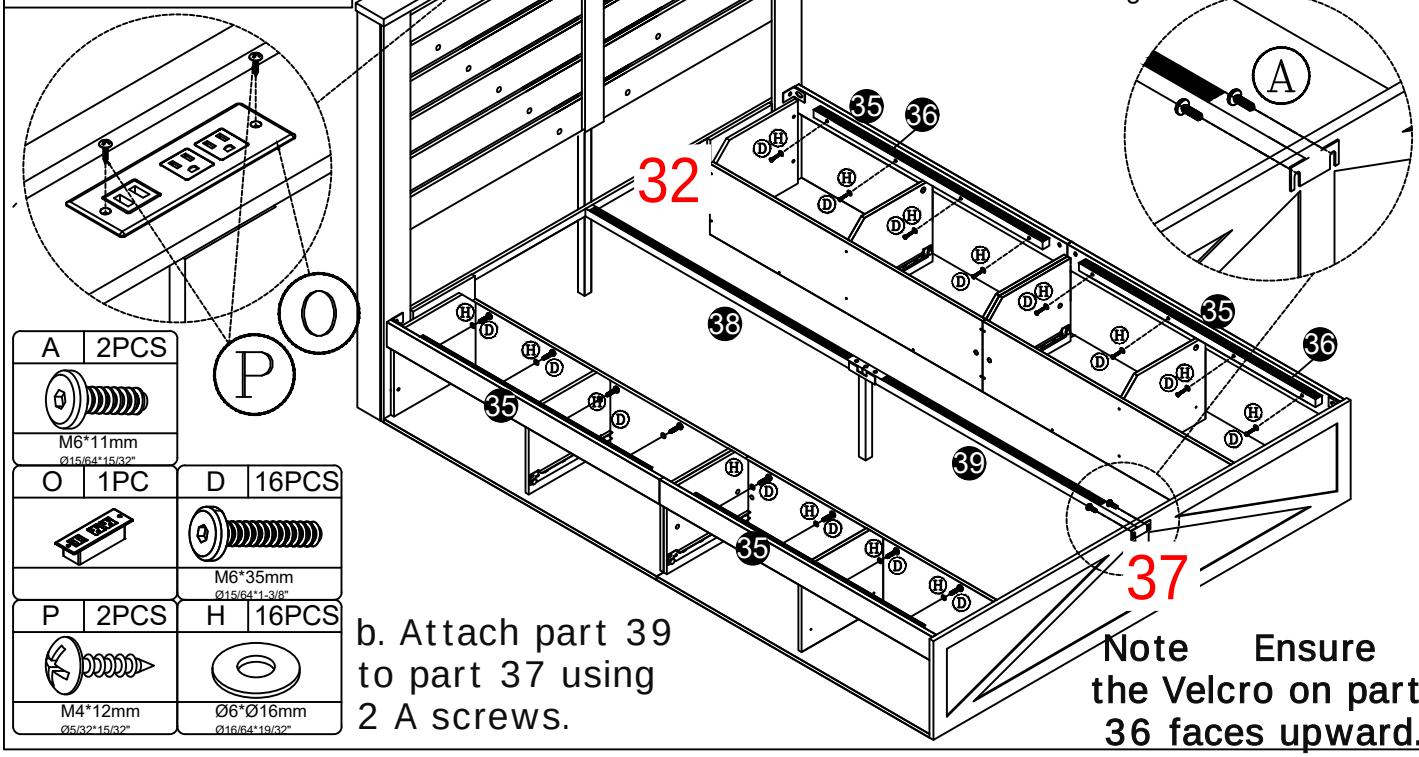

A	2PCS
M6*11mm Ø15/64*15/32"	

O	1PC	D	16PCS
		M6*35mm Ø15/64*1-3/8"	

P	2PCS	H	16PCS
M4*12mm Ø5/32*15/32"		Ø6*Ø16mm Ø16/64*19/32"	

b. Attach part 39 to part 37 using 2 A screws.

Note Ensure the Velcro on part 36 faces upward.

Frame Parts Section

Step 23

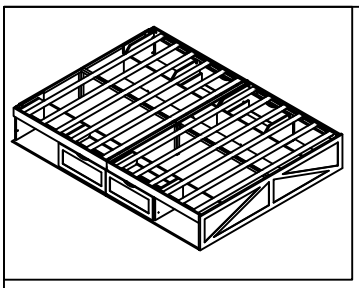

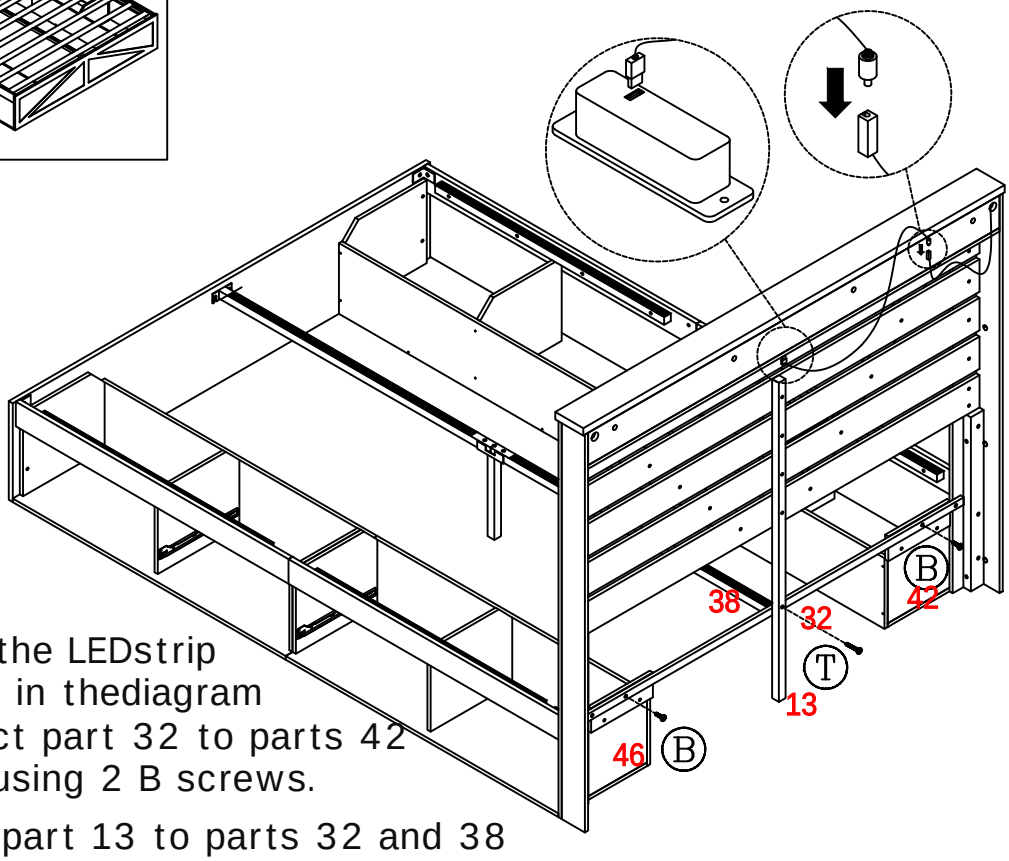

a. Install the LEDstrip as shown in thediagram

b. Connect part 32 to parts 42 and 46 using 2 B screws.

c. Secure part 13 to parts 32 and 38 using T screws

B	2PCS
M6*20mm Ø15/64*51/64"	

T	1PC
M8*60mm Ø5/16*2-23/64"	

Frame Parts Section

Step 24

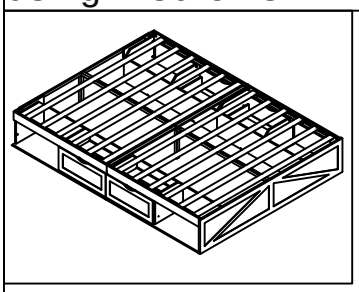

Note This step requires two people one to hold parts 15 and 16 and another to tighten the screws.

Attach parts 15 and 16 to the headboard using 10 B screws.

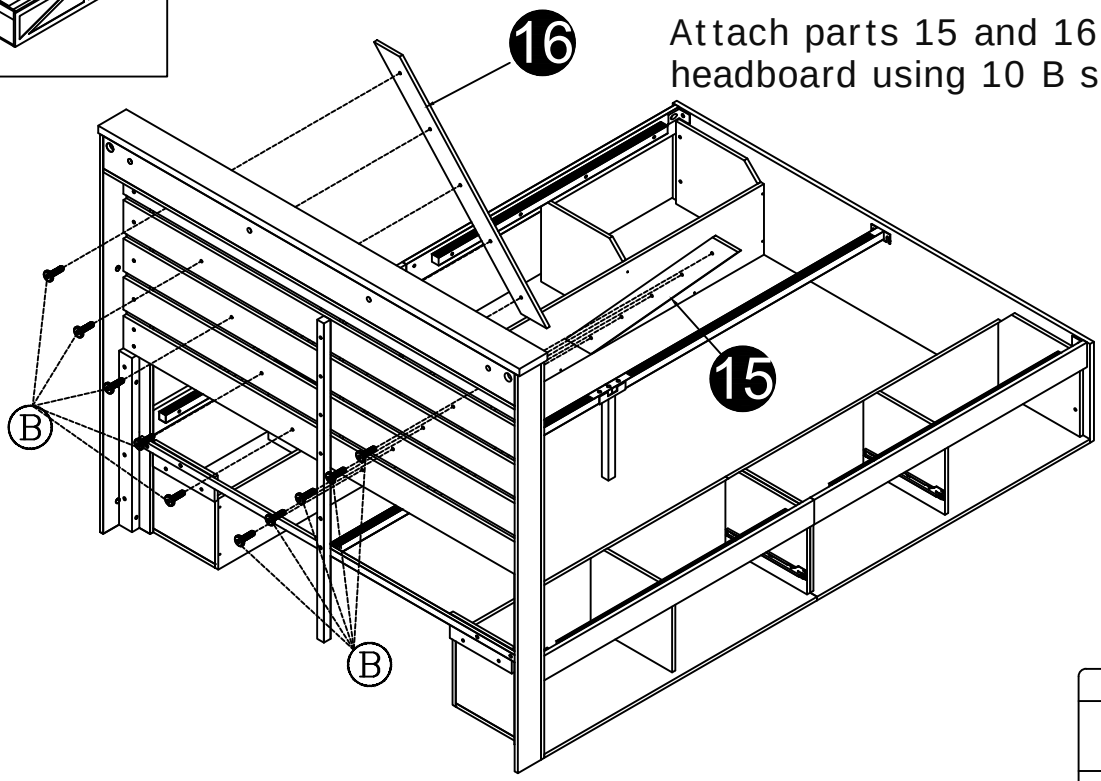

B	10PCS
M6*20mm Ø15/64*51/64"	

Frame Parts Section

Step 25

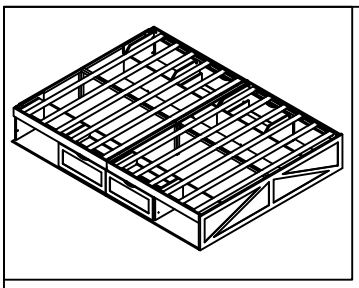

Do not tighten screw A at first, tighten screw Aafter the bracket is hung on it.

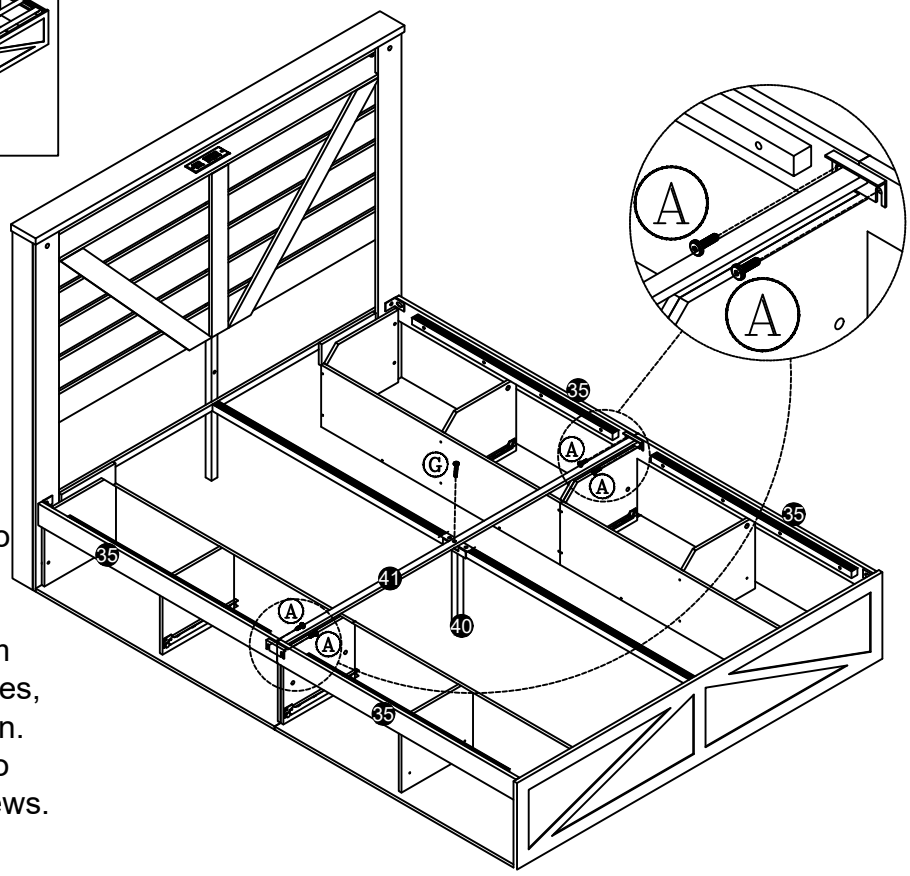

a.Connect part 41 to part 35 using 4 A screws.
Initially, tighten them to 70%, align all holes, and then fully tighten.
b.Connect part 41 to part 40 using T screws.

G	1PC
M8*50mm Ø5/16*1-31/32"	

A	4PCS
M6*11mm Ø15/64*15/32"	

Frame Parts Section

Step 26

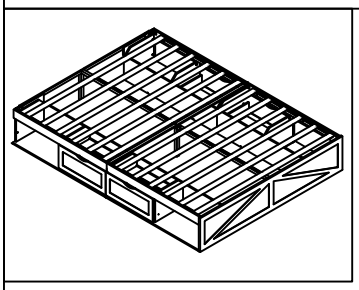

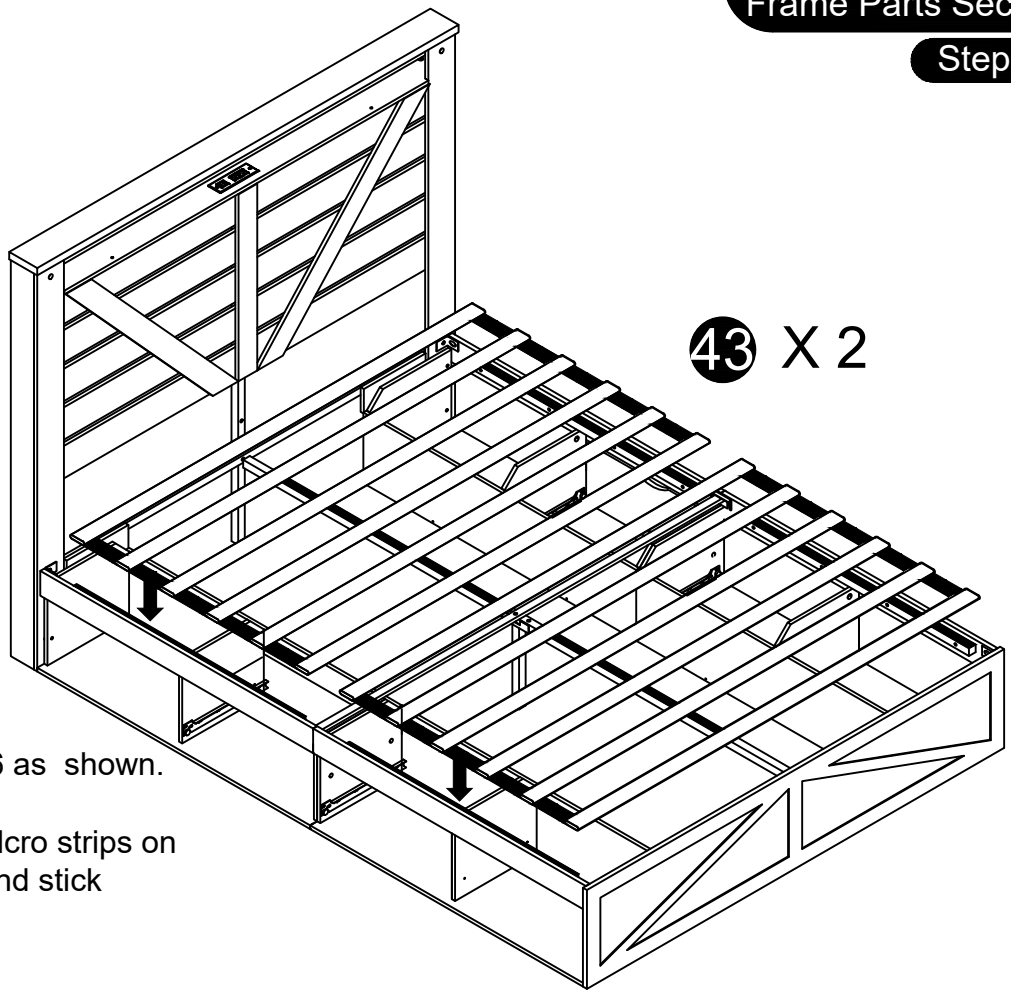

Lay 2 pieces of part 43 flat on part 36 as shown.

Note： Ensure the Velcro strips on parts 42 and 36 align and stick together.

Frame Parts Section

Step 27

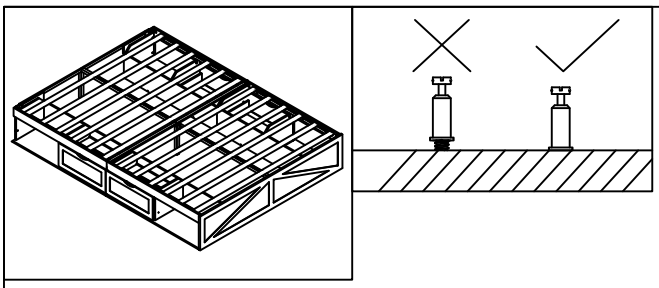

Install 4 K2 screws into 4 pieces of part 19.

Note Ensure all K2 screws are fully tightened. This step is repeated for 4 drawers.

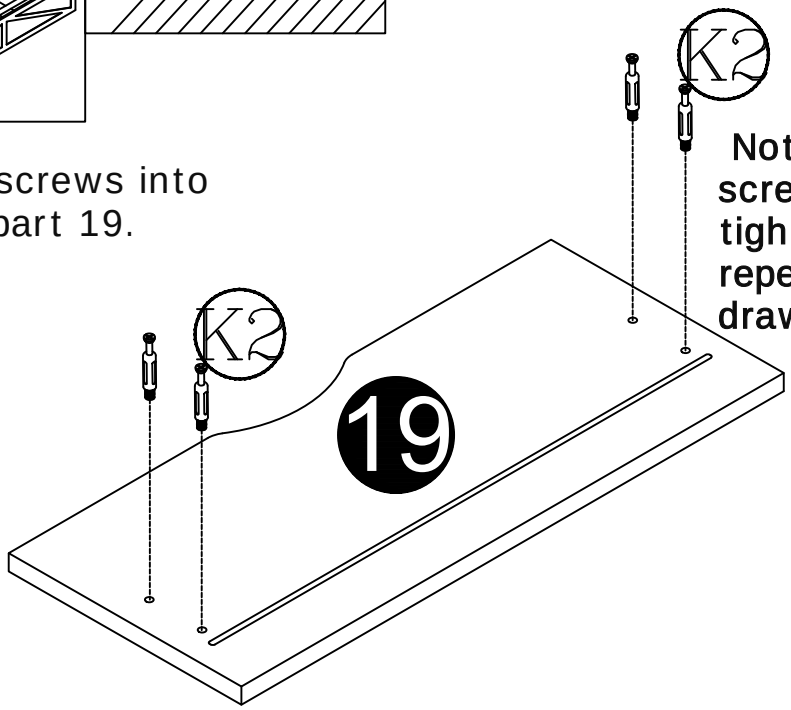

X 4

K2	16PCS
Ø7*40mm Ø9/32*1-37/64"	

Frame Parts Section

Step 28

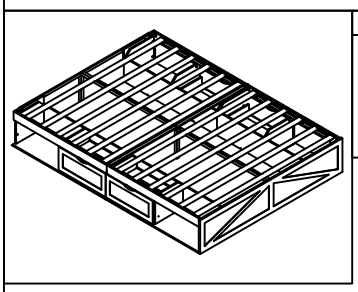

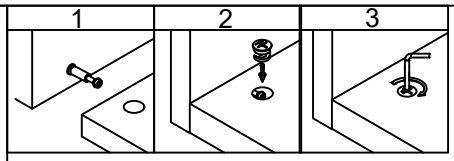

Note Ensure the grooves on parts 20 and 21 align with the groove on part 19. This step is repeated for 4 drawers.

Insert parts 20 and 21 into part 19 and secure using 4 K1 locking nuts.

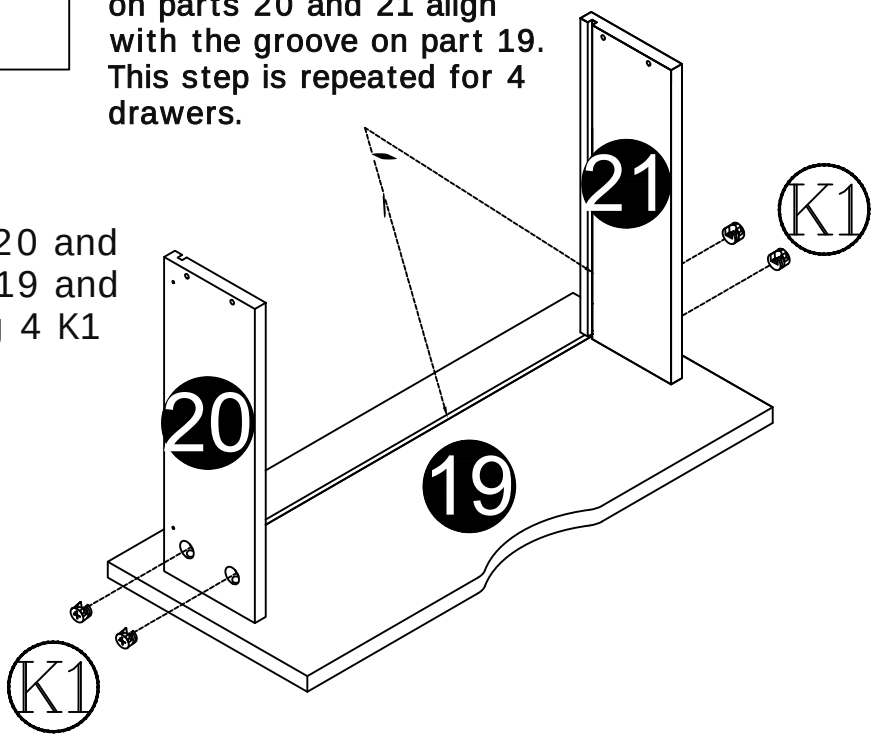

X 4

K1	16PCS
Ø15*10mm Ø19/32*25/64"	

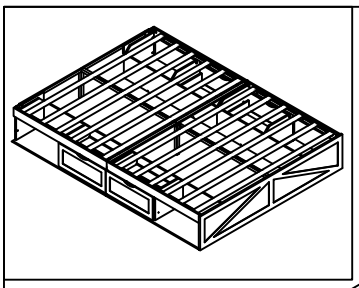

Frame Parts Section

Step 29

a. Insert part 22 along the grooves of parts 20 and 21.

b. Align part 23 with part 22, then secure to parts 20 and 21 using 4 L screws.

Note This step is repeated for 4 drawers.

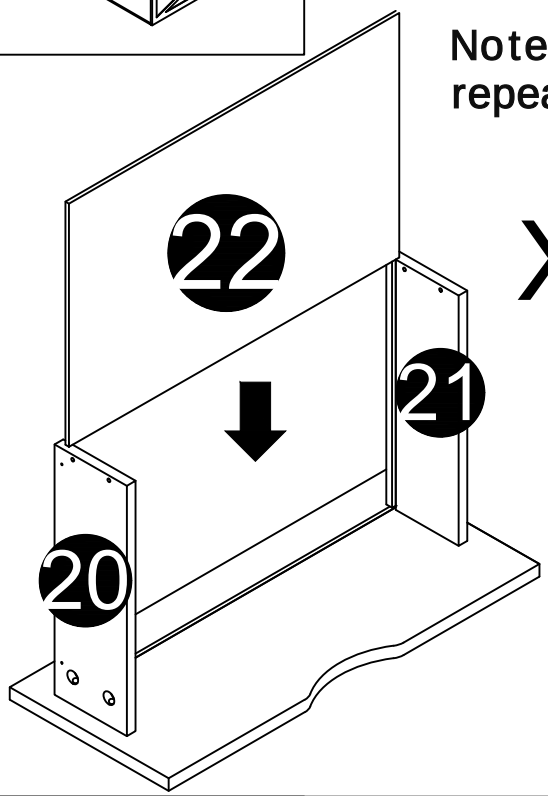

X 4

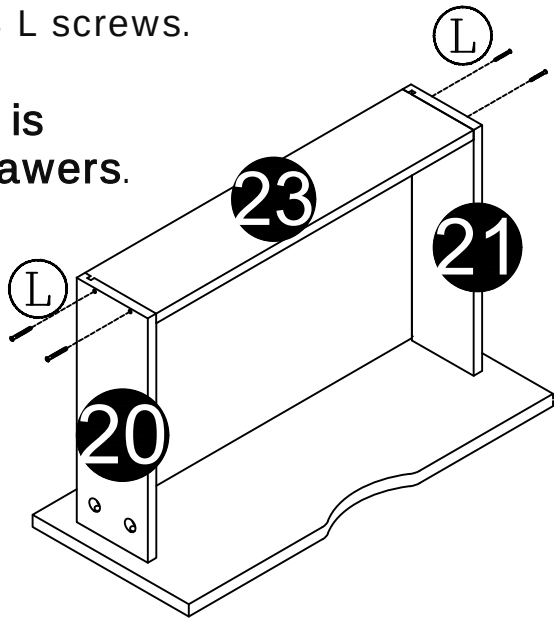

L	16PCS
M5*40mm Ø13/64*1-37/64"	

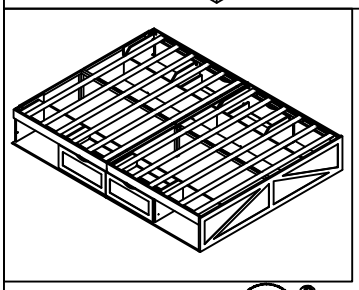

Frame Parts Section

Step 30

a. Attach part 45-2 to part 21 using 2 P screws.

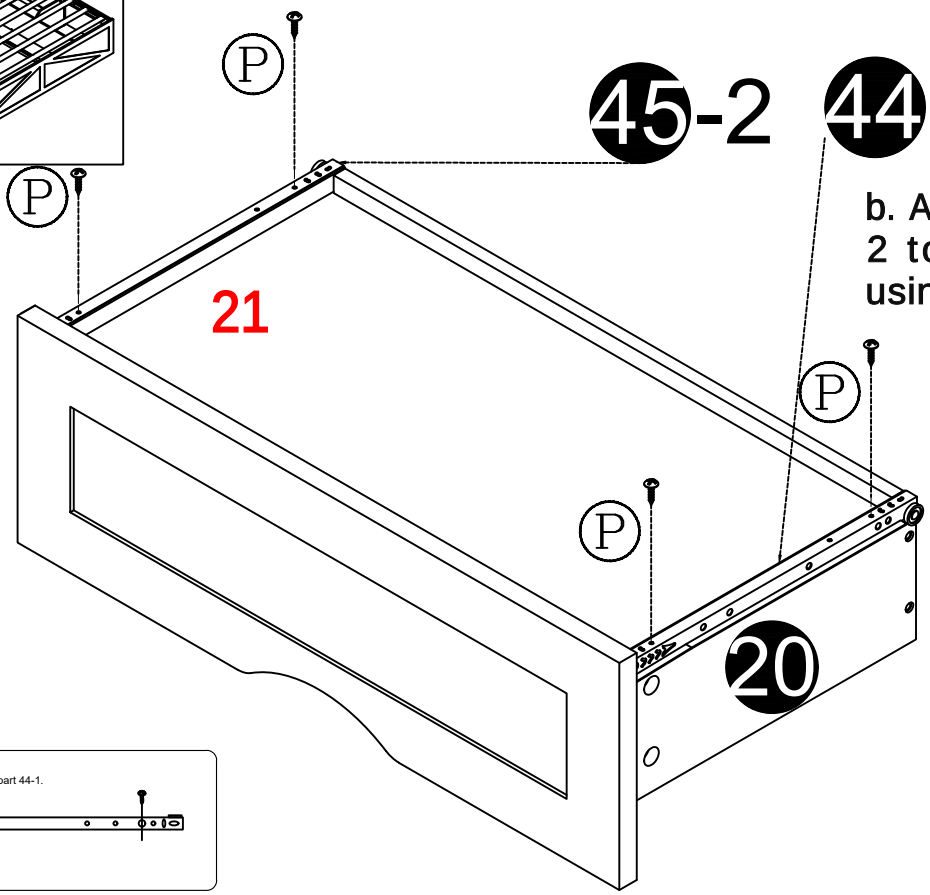

b. Attach part 44-2 to part 20 using 2 P screws.

Note This step is repeated for 4 drawers

X 4

Attention:
1. Please locate the holes from the back of part 44-1.

44-2/45-2 Back:

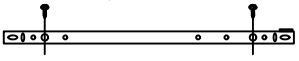

P	16PCS
M4*12mm Ø5/32*15/32"	

Frame Parts Section

Step 31

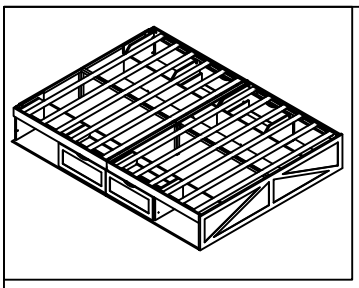

Install the drawers into the side frames of the bed, as shown in the diagram.

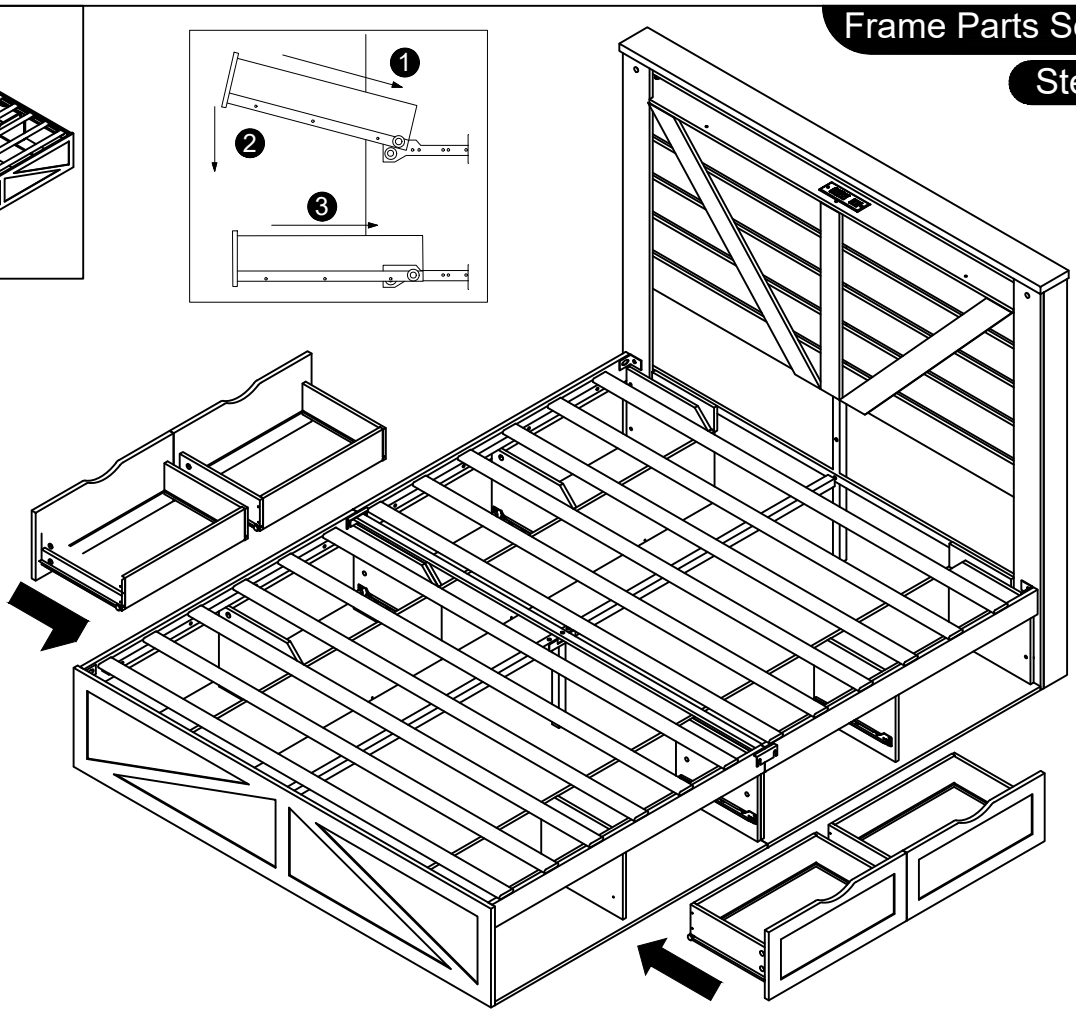

Frame Parts Section

Step 32

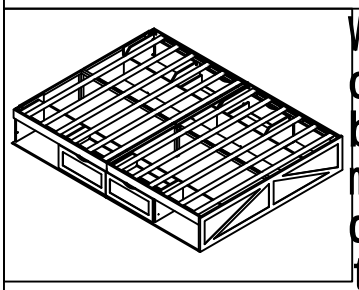

Warning:Do notjump or stand on the bed frame.This may cause damageor lead to injury

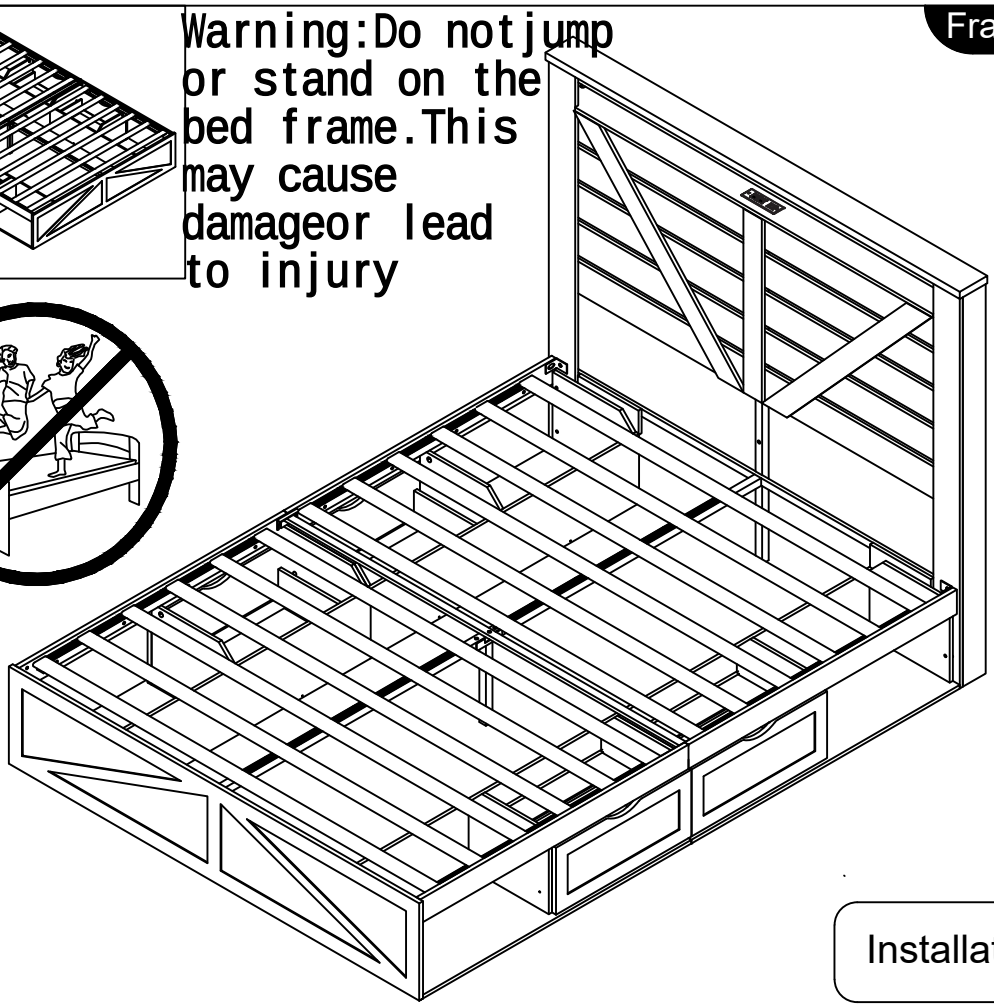

Installation Complete

MAINTENANCE AND CARE

1. Prevent Pests
Keep wooden furniture away from damp areas to avoid pests and wood damage. Use a dehumidifier or air conditioner in humid seasons to keep the room dry.
2. Protect from Sunlight
Avoid placing furniture in direct sunlight to prevent cracking, discoloration, or fading. Use curtains or shades if sunlight is unavoidable.
3. Keep Away from Fire
Place furniture away from heat sources or open flames to avoid damage and maintain its condition.
4. Regular Care
Apply furniture oil regularly to keep the wood shiny, prevent cracks, and extend its lifespan.
5. Clean Often
Vacuum dust and debris, especially under beds, to keep the furniture clean and hygienic.
6. Stay Dry
Ensure good ventilation to prevent moisture buildup. Use a dehumidifier if needed to protect the wood.
7. Avoid Corrosive Liquids
Keep the furniture away from acidic or alkaline substances to protect its surface and durability.
8. Use a Damp Cloth
Clean with a well-wrung damp cloth to avoid water damage or swelling.
9. Limit Sun Exposure
Too much sunlight can dry and damage wood. Position furniture in shaded areas or use curtains to block UV rays.