Assembly Instruction

Note:
- Please read this instruction carefully before assembly
- After approx 5 weeks, tighten all the screws and connecting parts to ensure stability and security
- The product is not suitable for outdoor use
- Keep away from exposure, fire (heat sources) and damp.

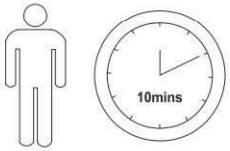

Part List

A 7mm 1X	B M7X30 4BX	C M9 4X		
①	②			

STEP

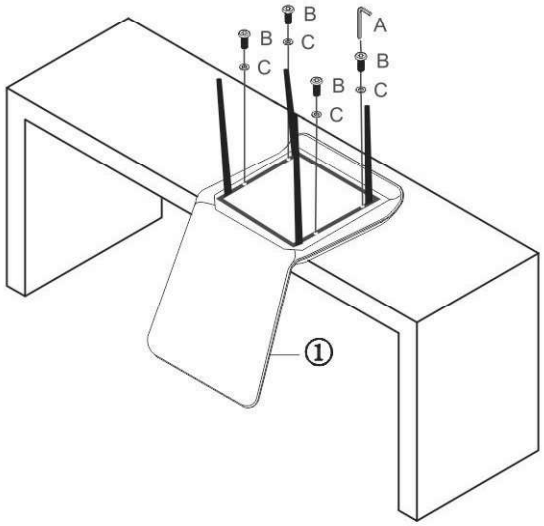
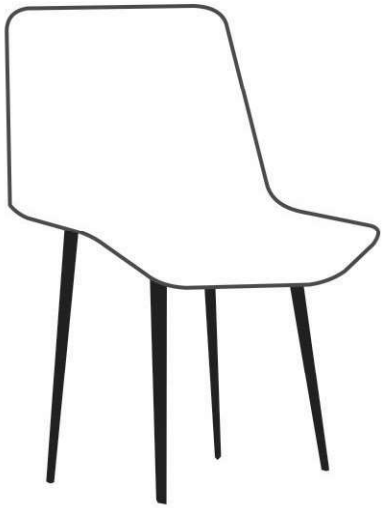
FINISHED