Outdoor Rocking Chair

ASSEMBLY MANUAL

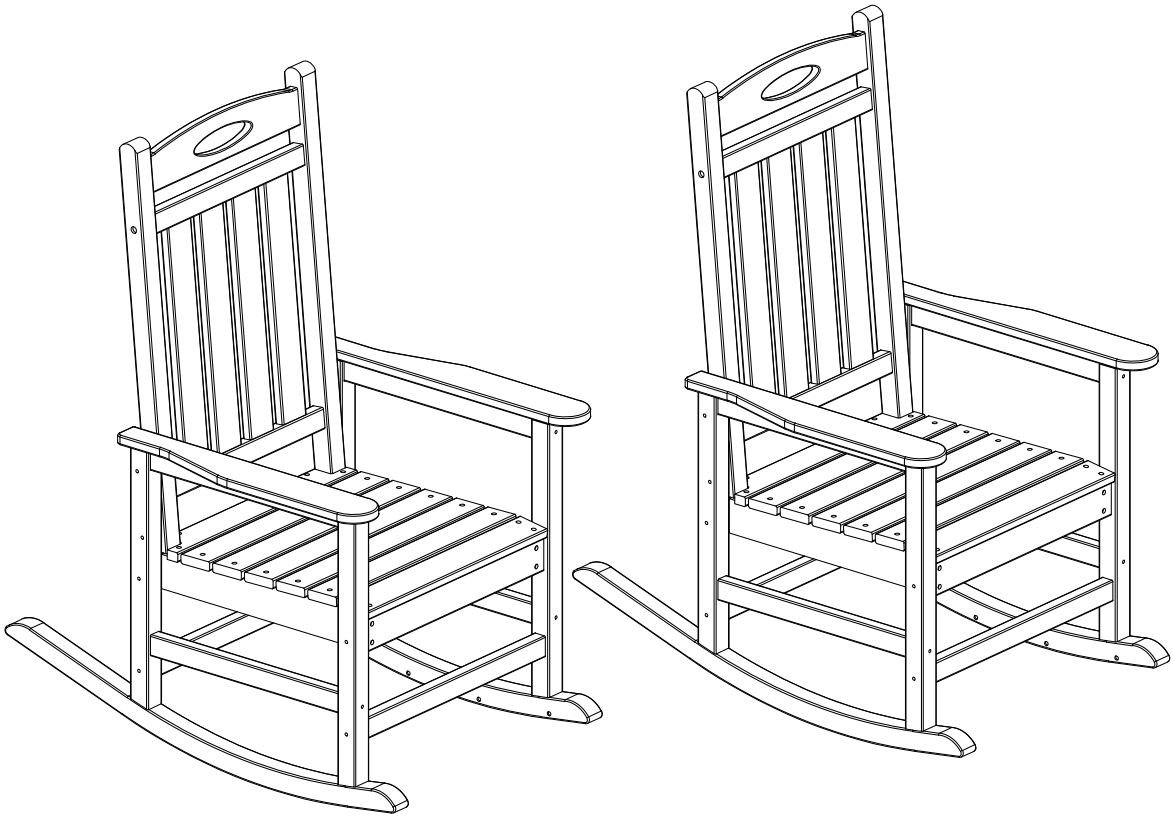

All Rights Reserved.

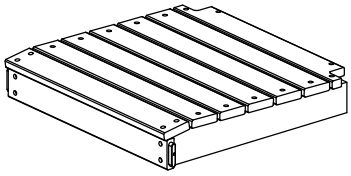

A 1X

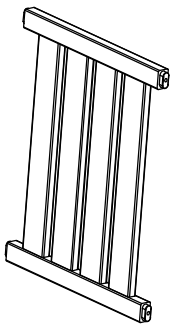

B 1X

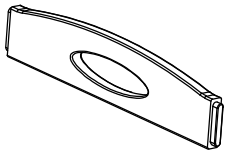

C 1X



D 1X



E 1X

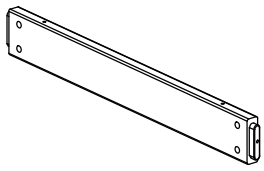

F 1X

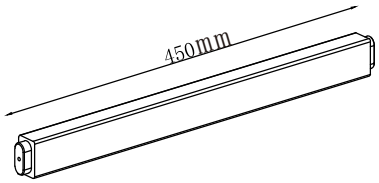

G 2X

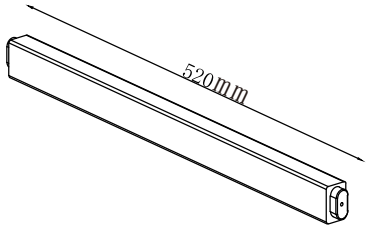

H 2X

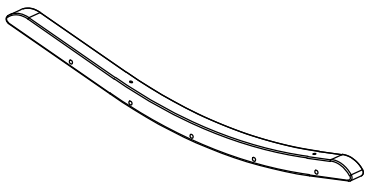

I 1X

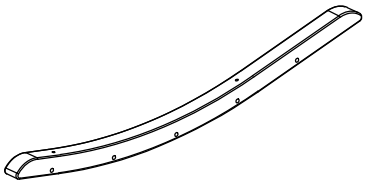

J 1X

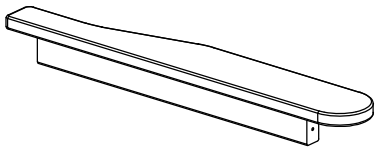

K 1X

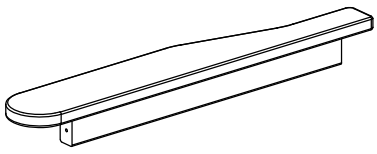

L 1X

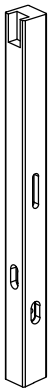

M 1X

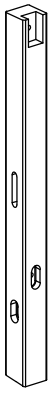

N 1X

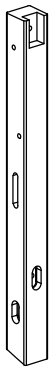

O 1X

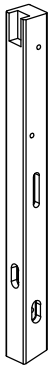 P 1X	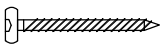 M6*45 1 6X	 M6*60 2 24X
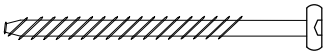 M6*80 3 4X	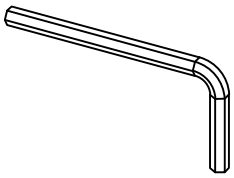 4 1X	

Assembly Instructions (READ & SAVE FIRST)

1.Separate and identify all parts to ensure you have everything listed above.
2.Assemble on a soft mat to avoid scratches on the product.
3.Follow steps in order—do not skip any part.
4.Use washers as required (if included).
5.Do not over–tighten screws or nuts during assembly.
6.Leave all screws slightly loose until all parts are aligned, then tighten fully.
7. Use an electric screwdriver to speed up the assembly process.



M 1X



N 1X



O 1X



P 1X



G 2X



M6*60

2 4X

Step1 Base Rocker Assembly

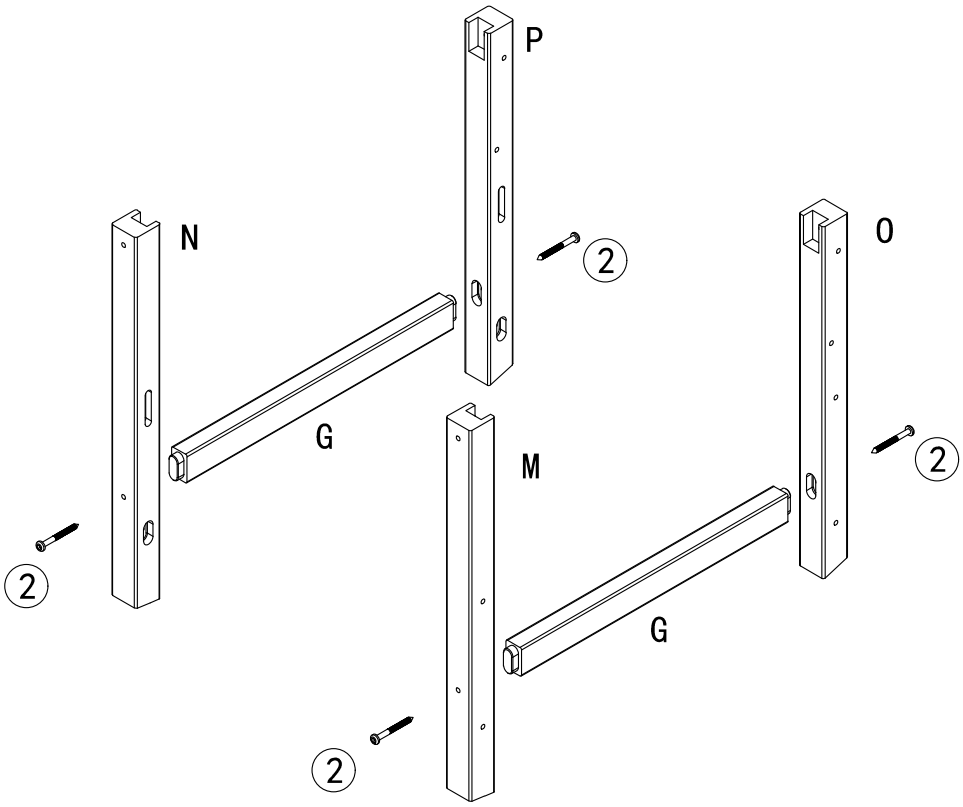



I 1X



J 1X

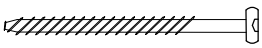

M6*80

3 4X

Step2

Please note the distinction between the left and right rocker legs: for aesthetic purposes, install the side with screw holes facing inward.

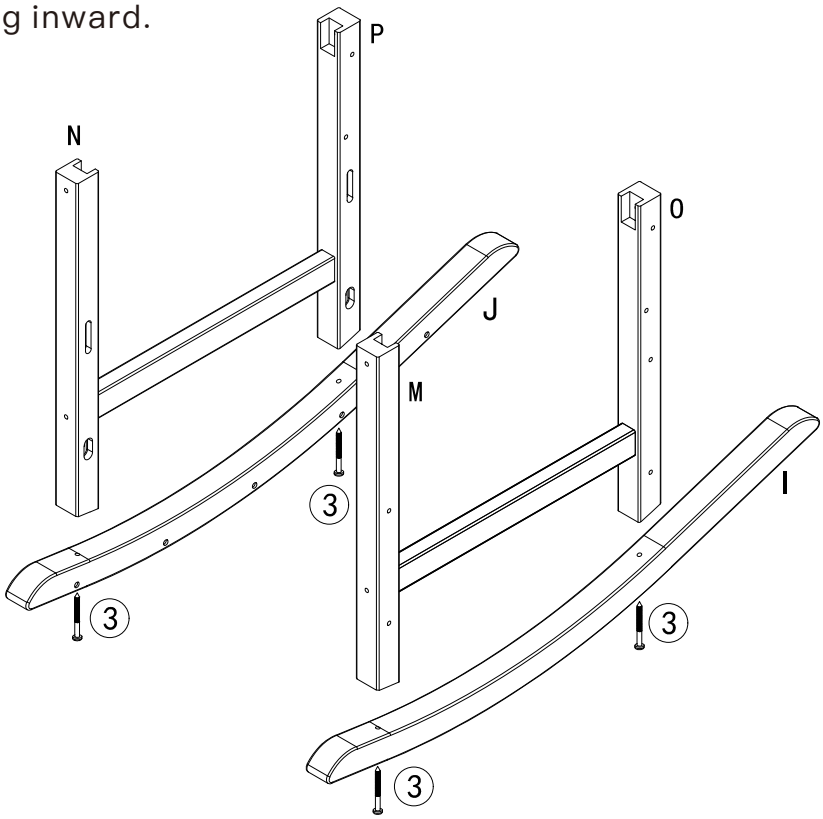

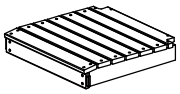

A 1X



F 1X



M6*45

1 6X

Step3 Seat Assembly

If the seat has shifted, pivot at corners to square up before assembling.

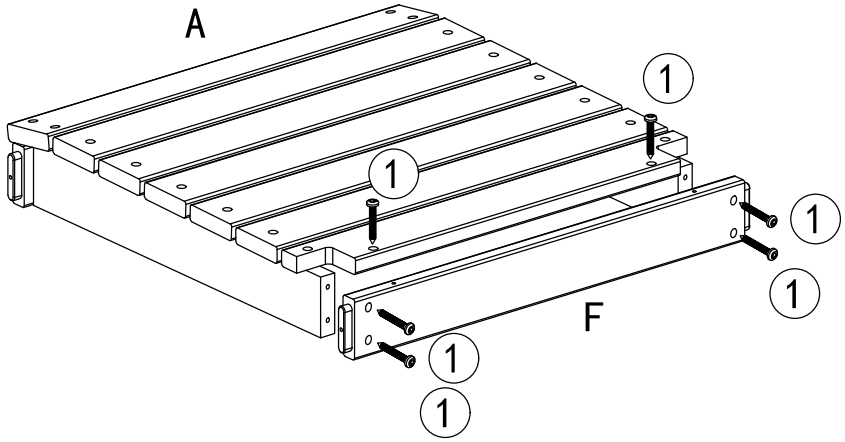

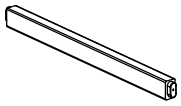

H 2X



M6*60

2 8X

Step4

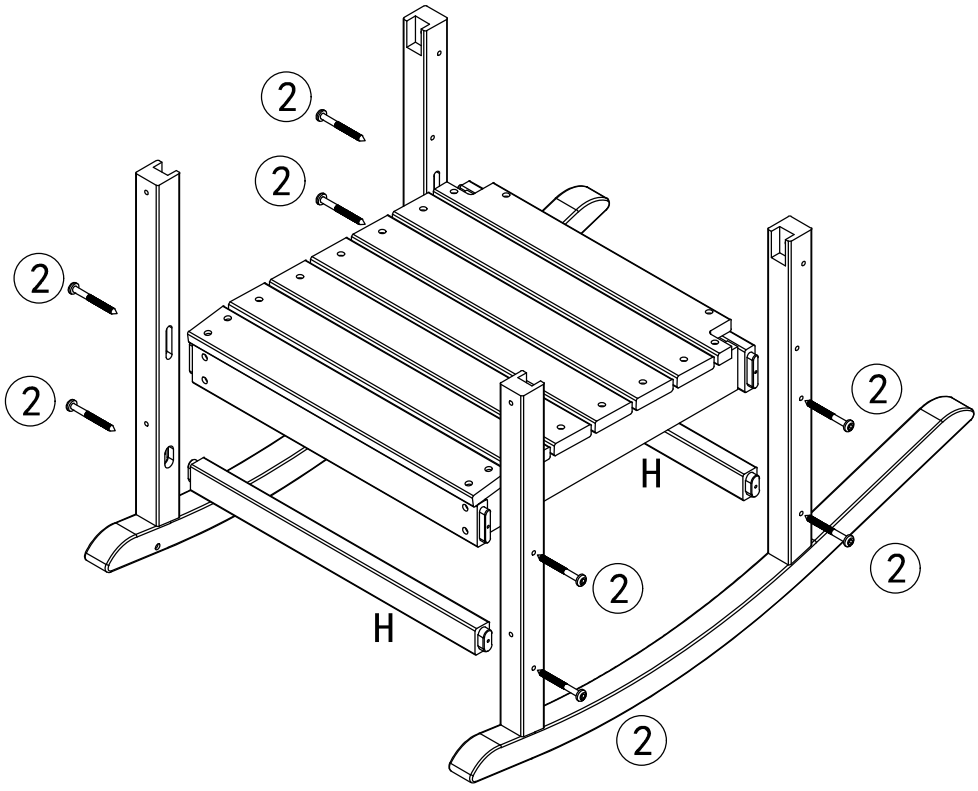



K 1X



L 1X



M6*60

2 4X

Step5

Do not over-tighten screws to prevent damage to the material.

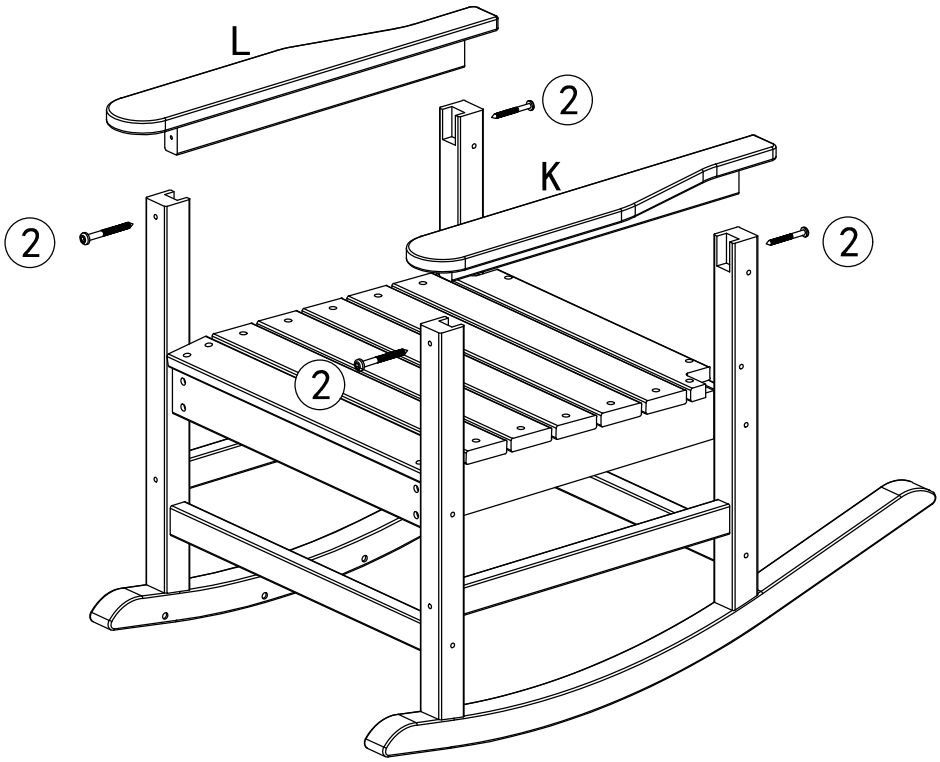

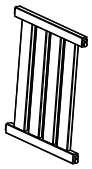

B 1X

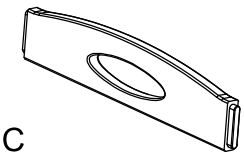

C 1X



D 1X



E 1X

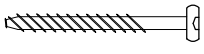

M6*60

2 4X

5

Step6 Backrest Assembly

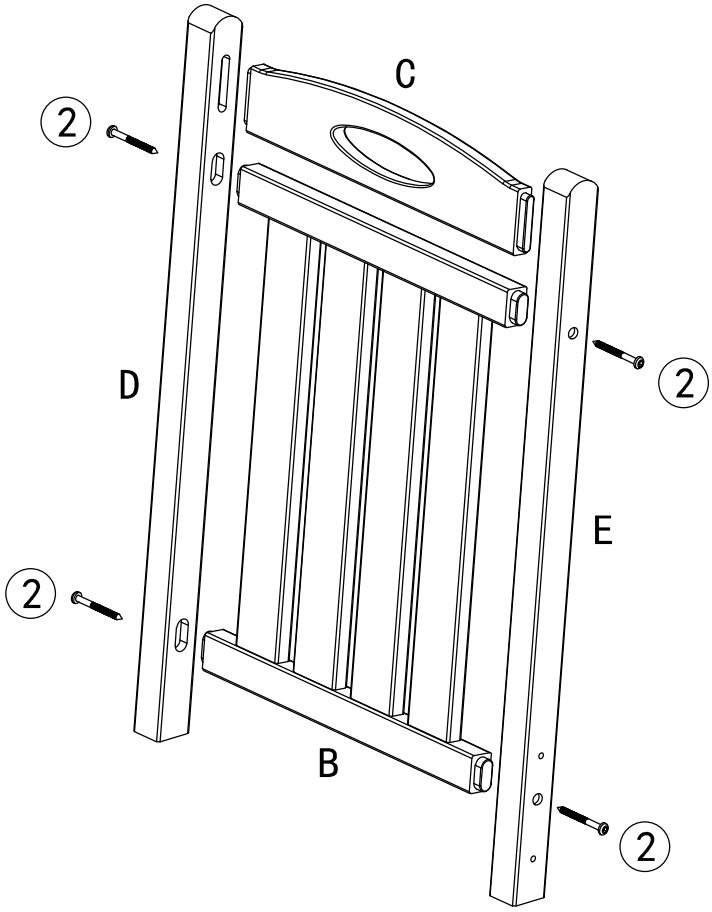



M6*60

2 4X

Step7

After adjusting the angle, fasten the backrest to the side frames with screws.

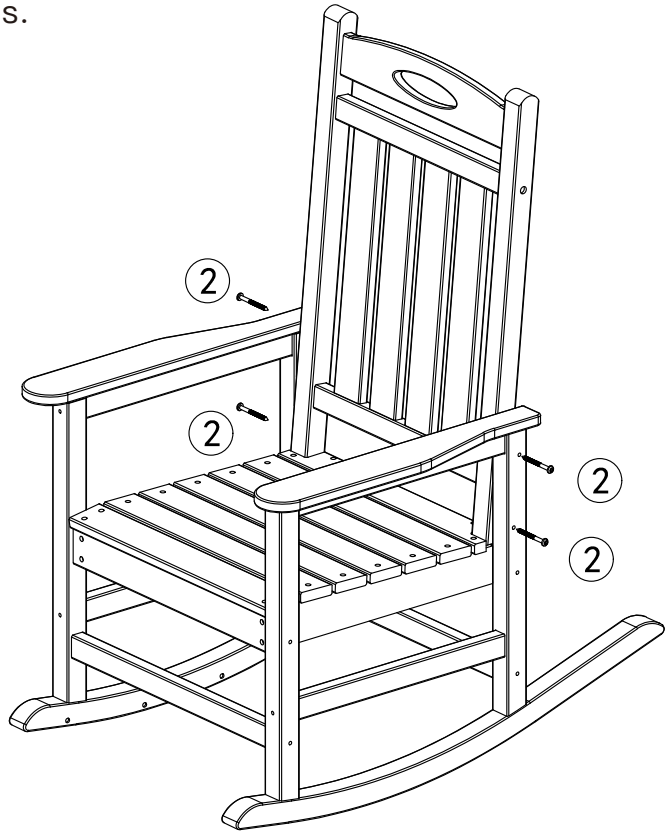

Step8 Final Alignment & Tightening

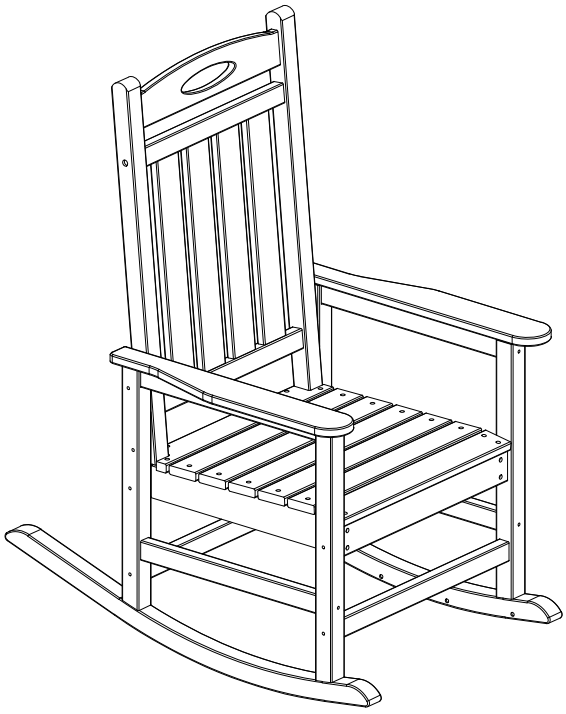

1.Double-check that all parts are properly aligned.
2.Tighten all screws fully in sequence.
3.Note: If any screw holes don't align, loosen all screws slightly, reposition the parts, and try again.

Step9

Repeat the above procedures to assemble another chair.

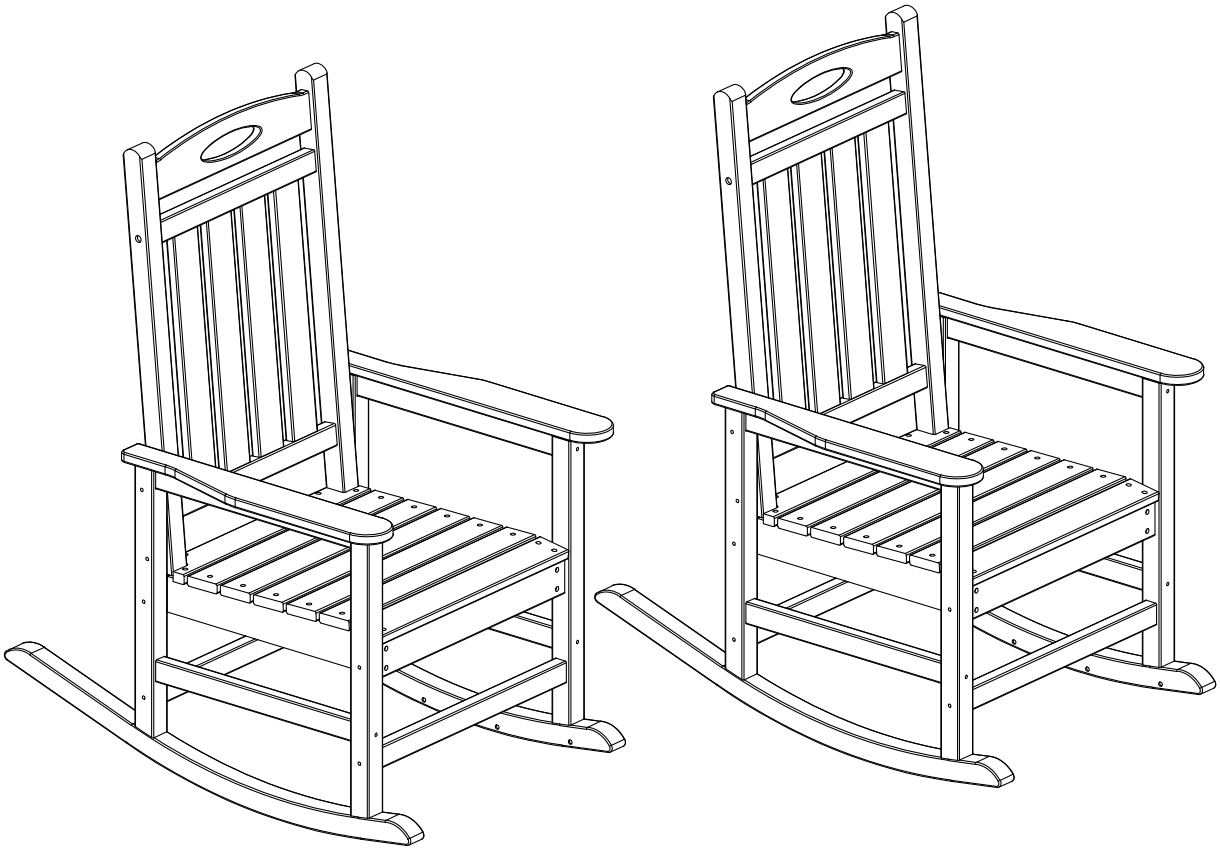

Thanks for your purchase.

We believe in our products.

That's why we provide a 12-month warranty and friendly, easy-to-reach after-sales service. So, if you have any questions about our product or assembly, please feel free to contact us. We are here for you.

Please have your order ID available if you reach out for support.
If you have damaged parts or product, please send us photos for an immediate response.

All Rights Reserved.