W L I V E

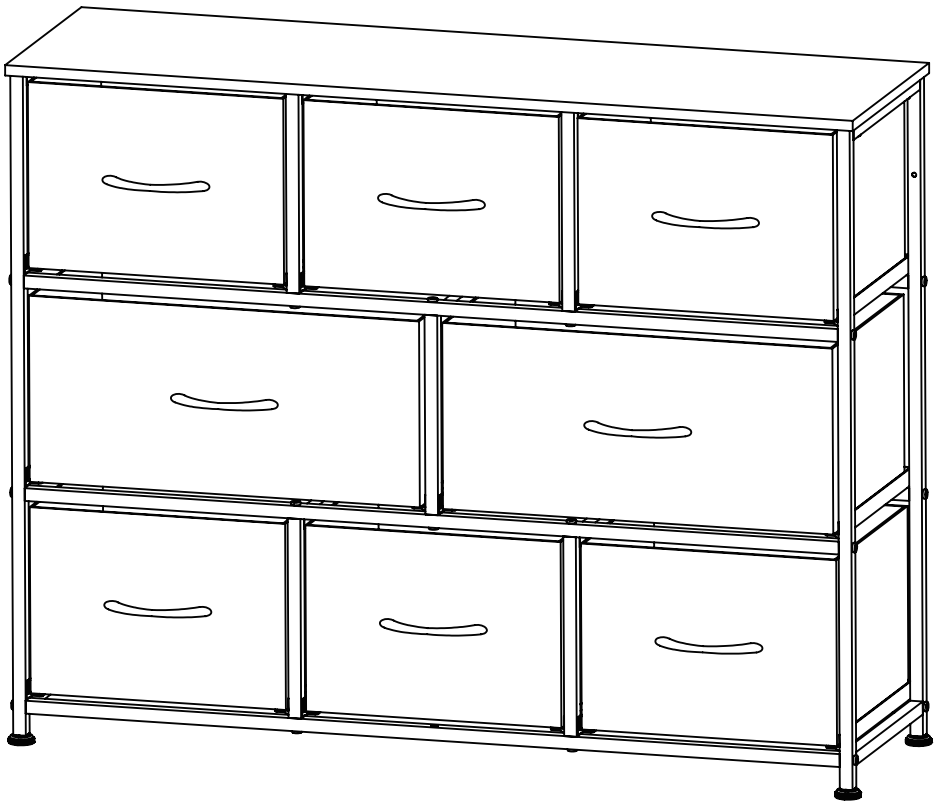

V4.0

ASNG065

Fabric 3-Tier 8-Drawer Storage Cabinet

IMPORTANT INFORMATION
READ CAREFULLY.
KEEP THIS INFORMATION FOR FURTHER REFERENCE.

GENERAL GUIDELINES

Please read the following instruction carefully and use the product accordingly.
Please keep this manual and hand it over when you transfer the product.
This summary may not include every detail of all variations and considered steps.
Please contact us when further information and help are needed.

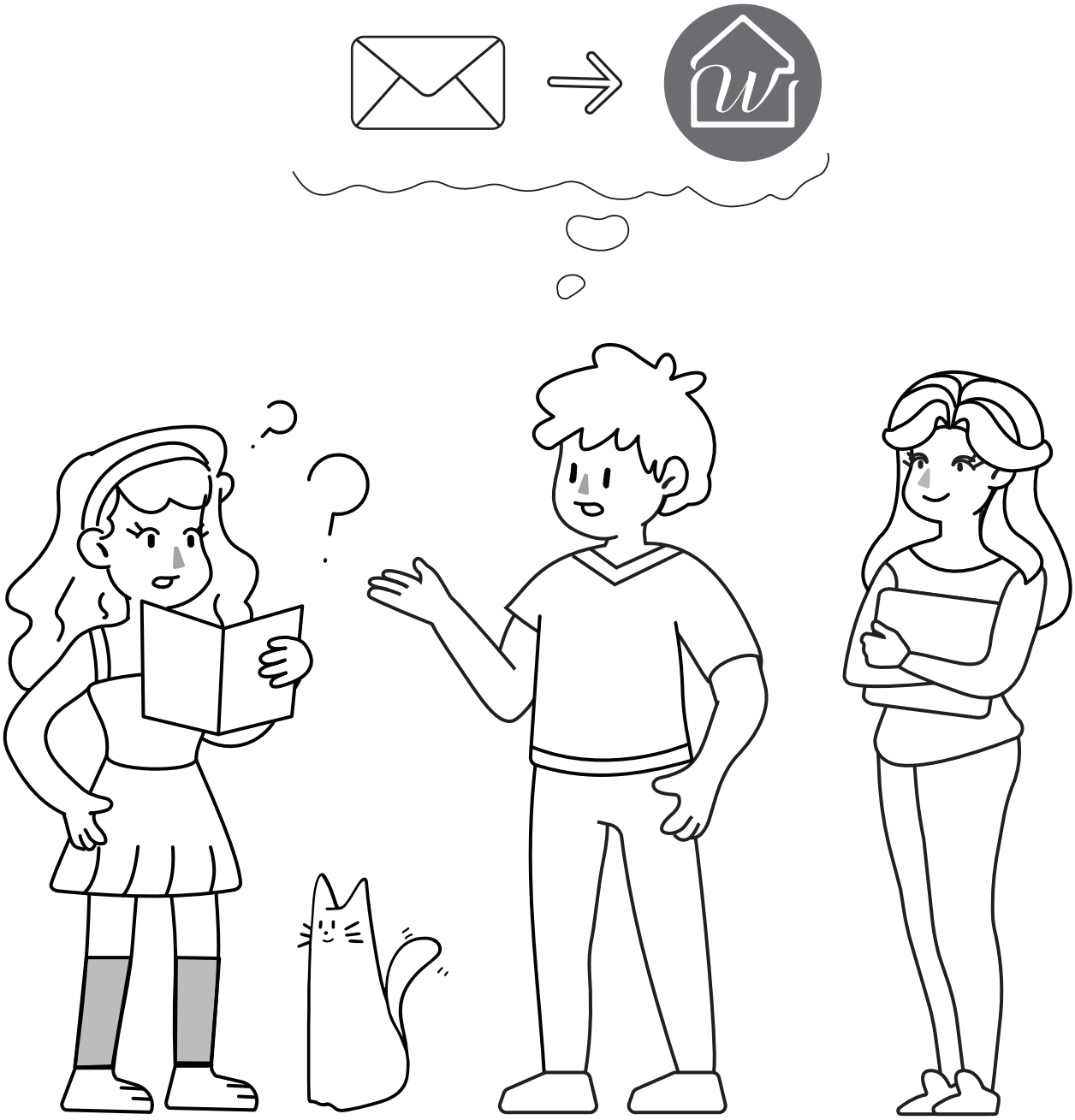

NOTES

Please follow the assembly instructions precisely and only use the product as intended.

If an odor is present when first opening the package, please leave the unwrapped product in a shaded and ventilated area for a few days to air out.Please follow the assembly instructions precisely and only use the product as intended.

Prior to assembly, please check the product for defects or missing accessories. If any defects are found or accessories are missing, do not use product as damage or injury may occur;
Please contact us for assistance and replacement.

During assembly, please only slightly tighten all screws in their correct position first, then fully tighten them. A Philips screwdriver is recommended but not included.

It is suggested you regularly check the products bolts and connections to ensure safe use.

Assemble the item on a soft flat and clean surface to avoid scratches and damage.

It is recommended that two people assemble this product.During assembly, please only slightly tighten all screws in their correct position first, then fully tighten them. A Philips screwdriver is recommended but not included.

WARNINGS

During assembly, keep parts and packaging materials away from children and pets as there could cause injury and are a potential choking hazard.Avoid sharp objects or corrosive chemicals to prevent damage to the product.Please open the item slowly and cautiously to avoid pinching your hands by metal joints, especially children.

ANTI-TIP WARNING

Serious or fatal crushing injuries can occur from furniture tip-over. To prevent this furniture from tipping over it must be permanently fixed to the wall.

Since different wall materials require different types of fixing device, for advice on suitable fixing systems, contact your local specialized dealer.

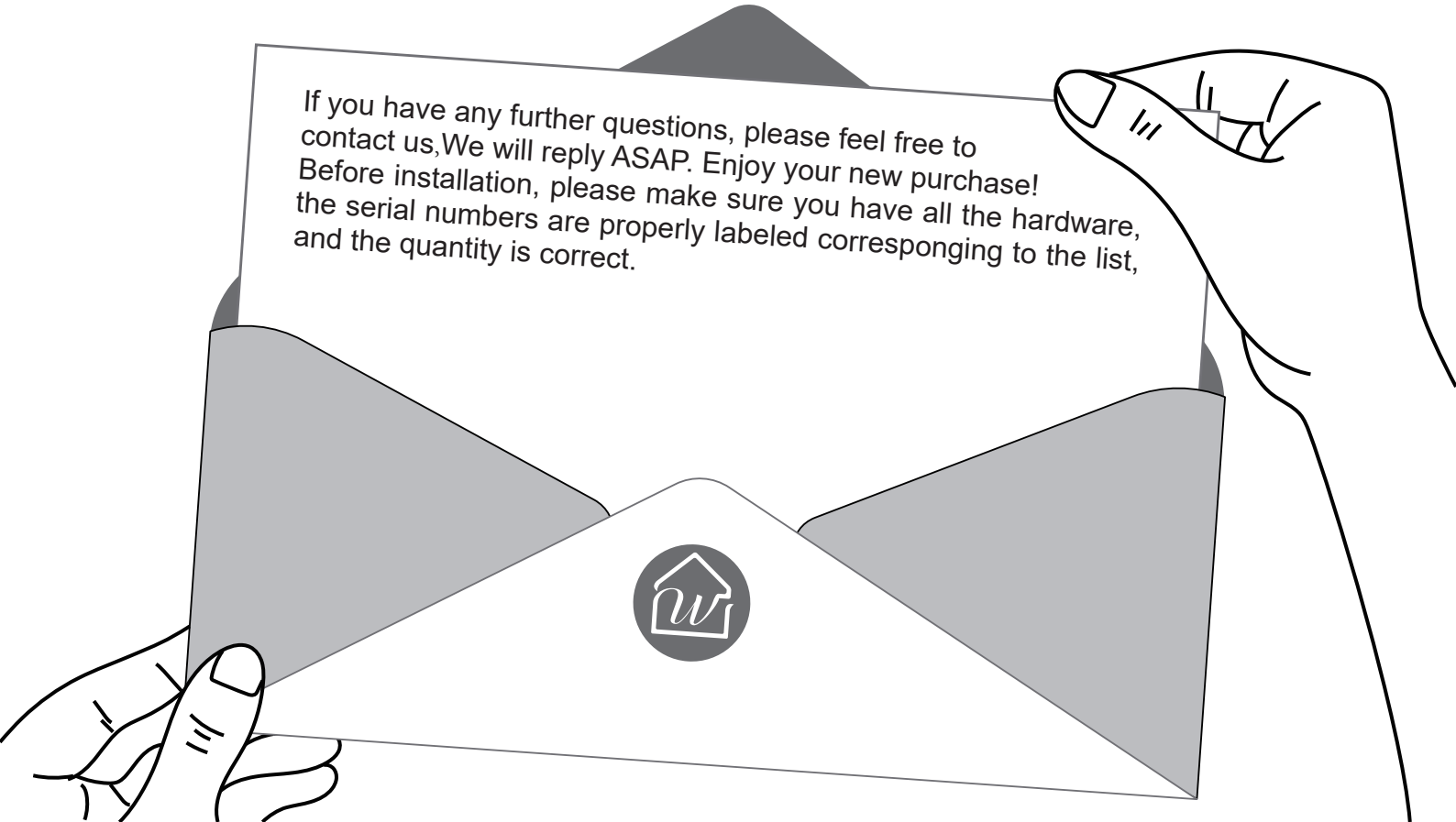

INSTRUCTIONS

❶

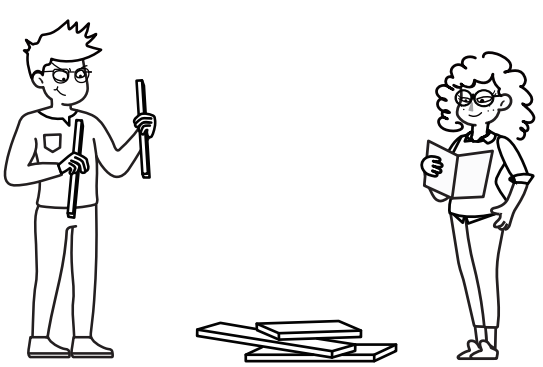

❷

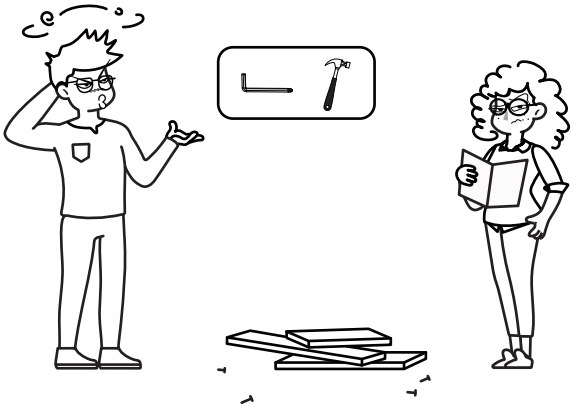

❸

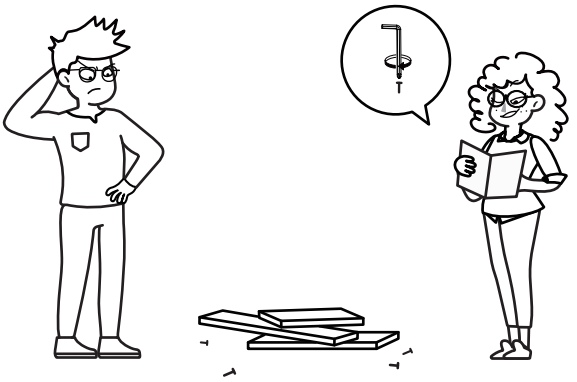

❹

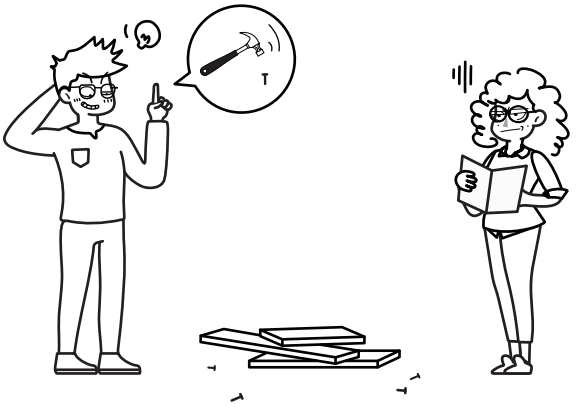

❺

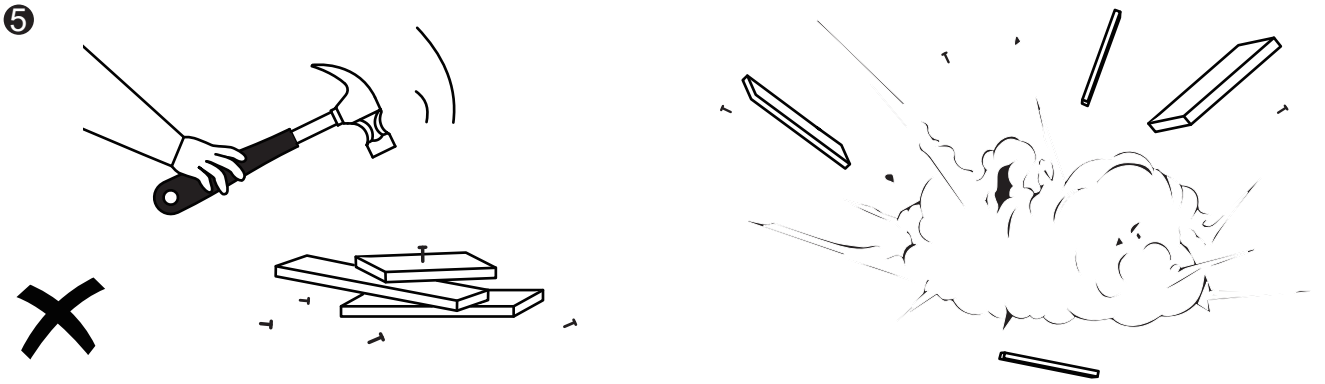

❻

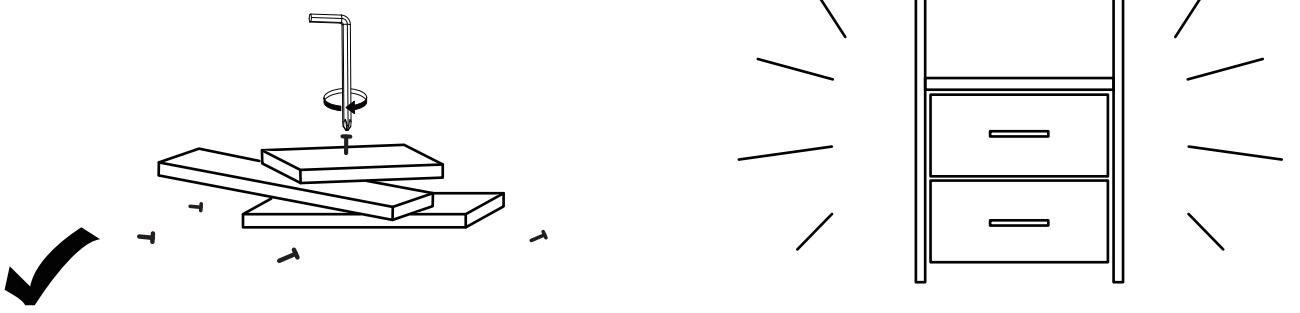

EXPLODED DRAWING

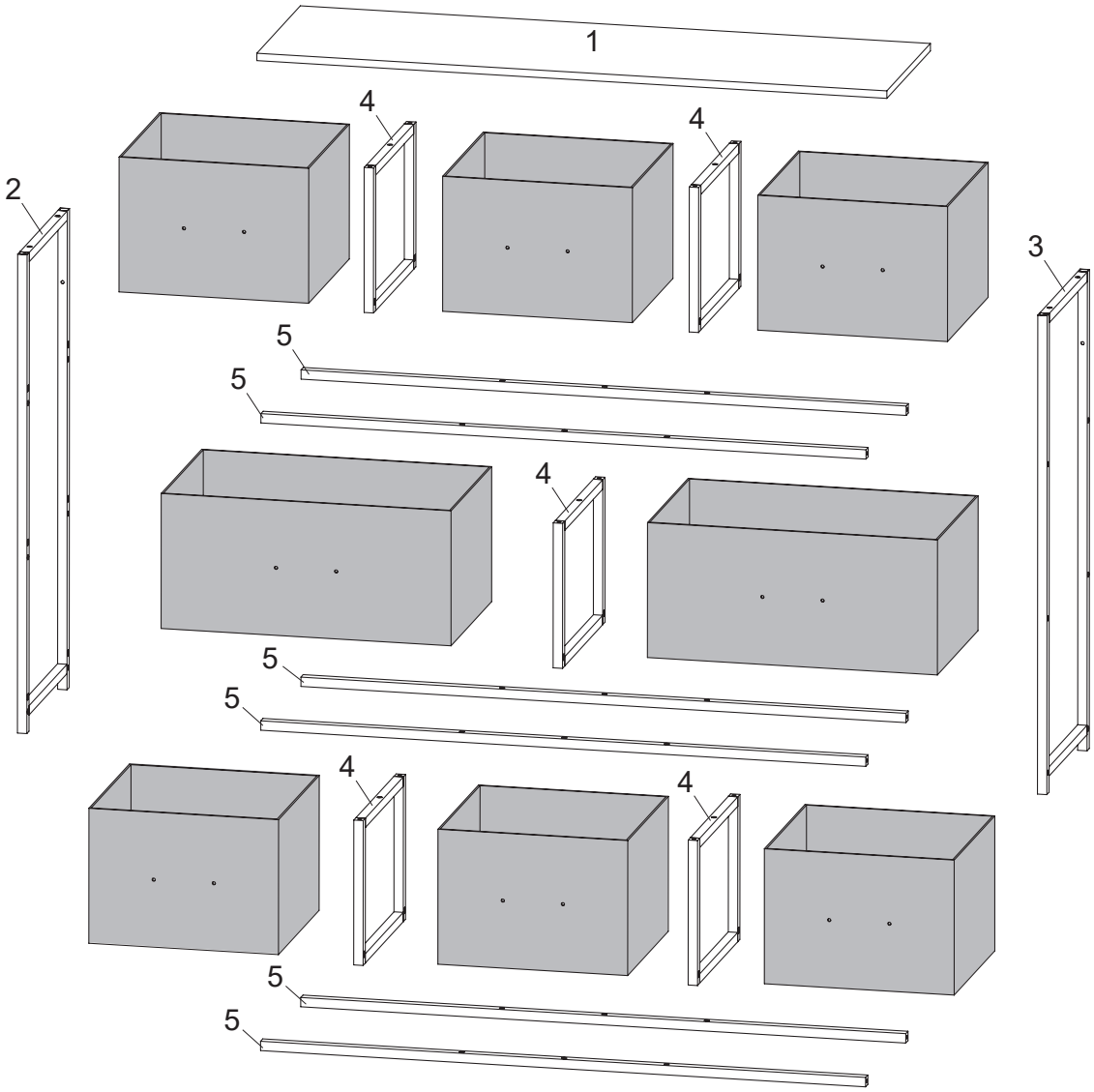

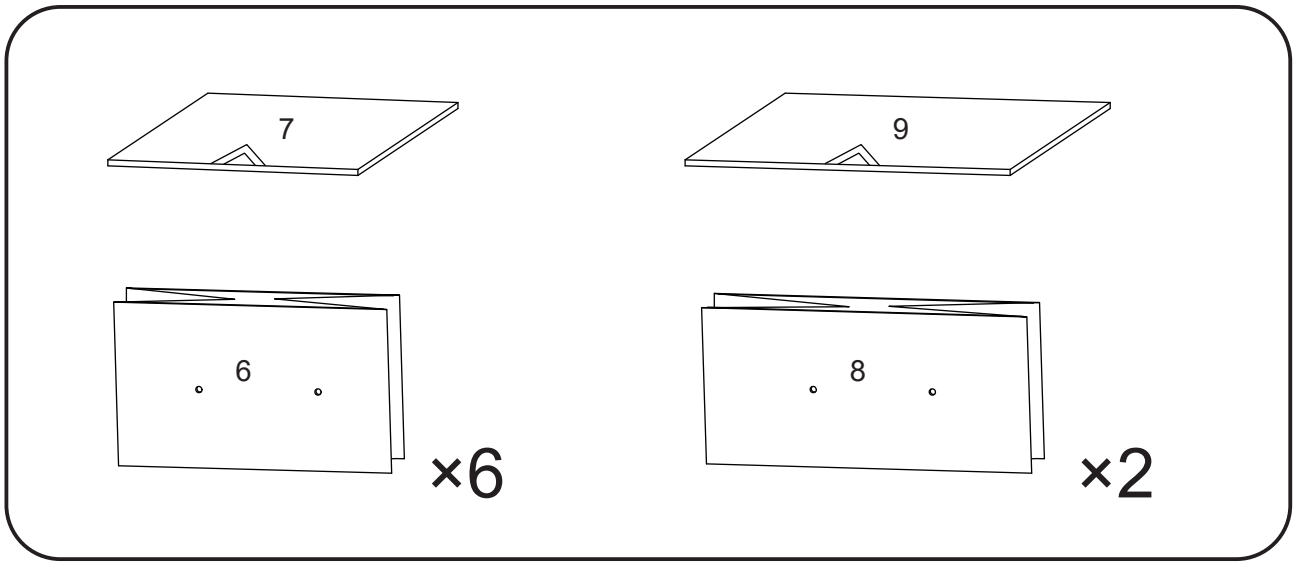

PARTS

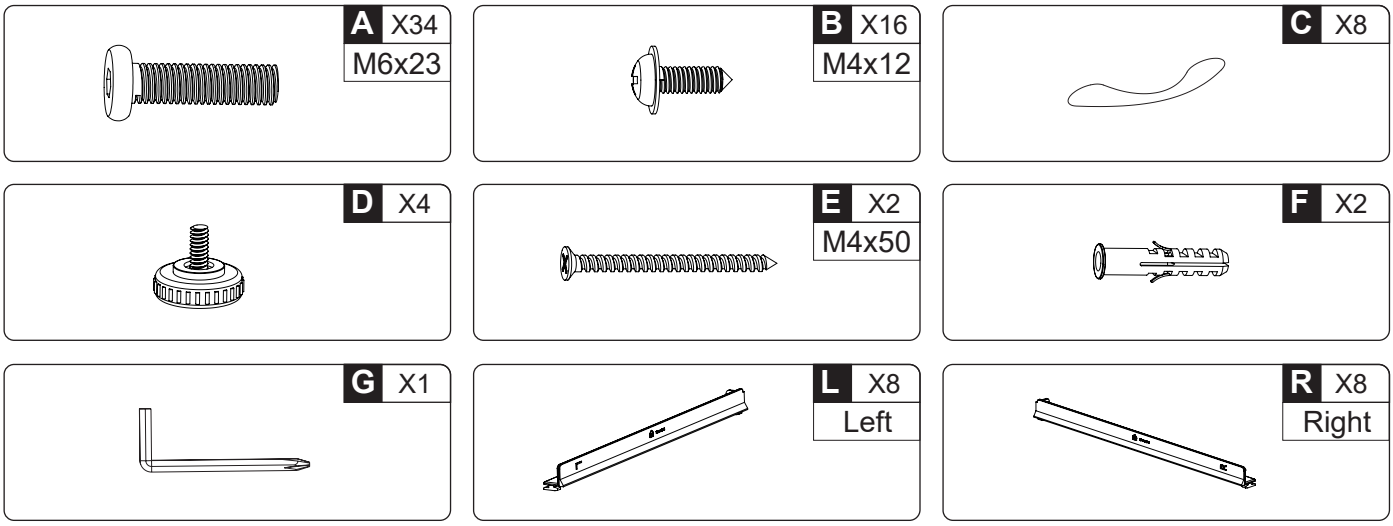
A X34
M6x23
B X16
M4x12
C X8
D X4
E X2
M4x50
F X2
G X1
L X8
Left
R X8
Right

Step 1

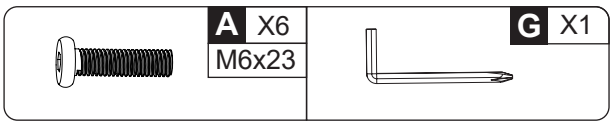

1. Put a blanket under the board to avoid scratch or damage.
2. Please note that the holes indicated by fingers on the steel frame should face the same direction.
3. Please do not fully tighten screws until all screws are in place.

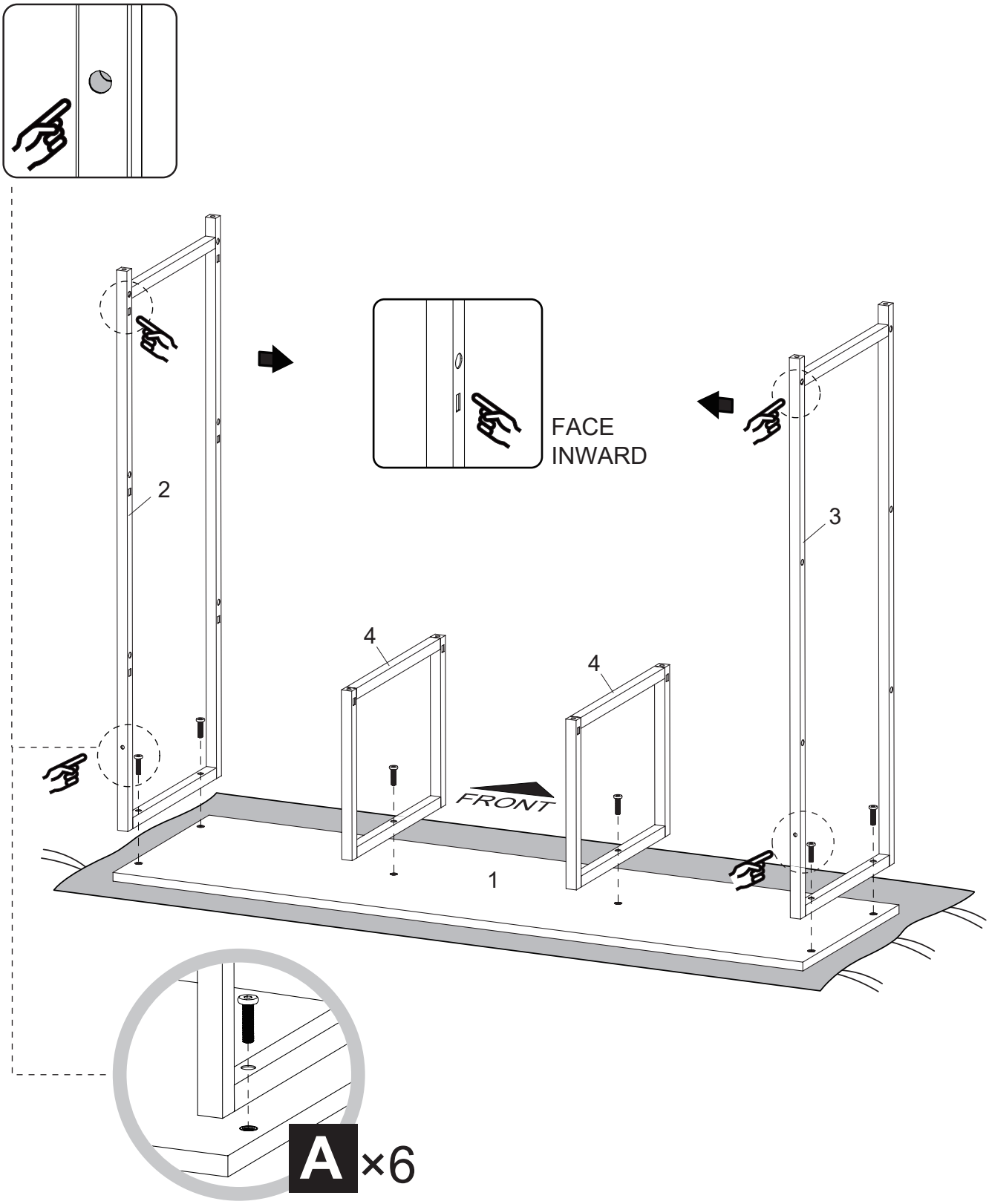

Step 2

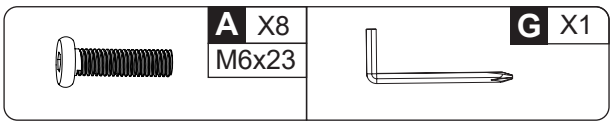

Please do not fully tighten screws until all screws are in place.

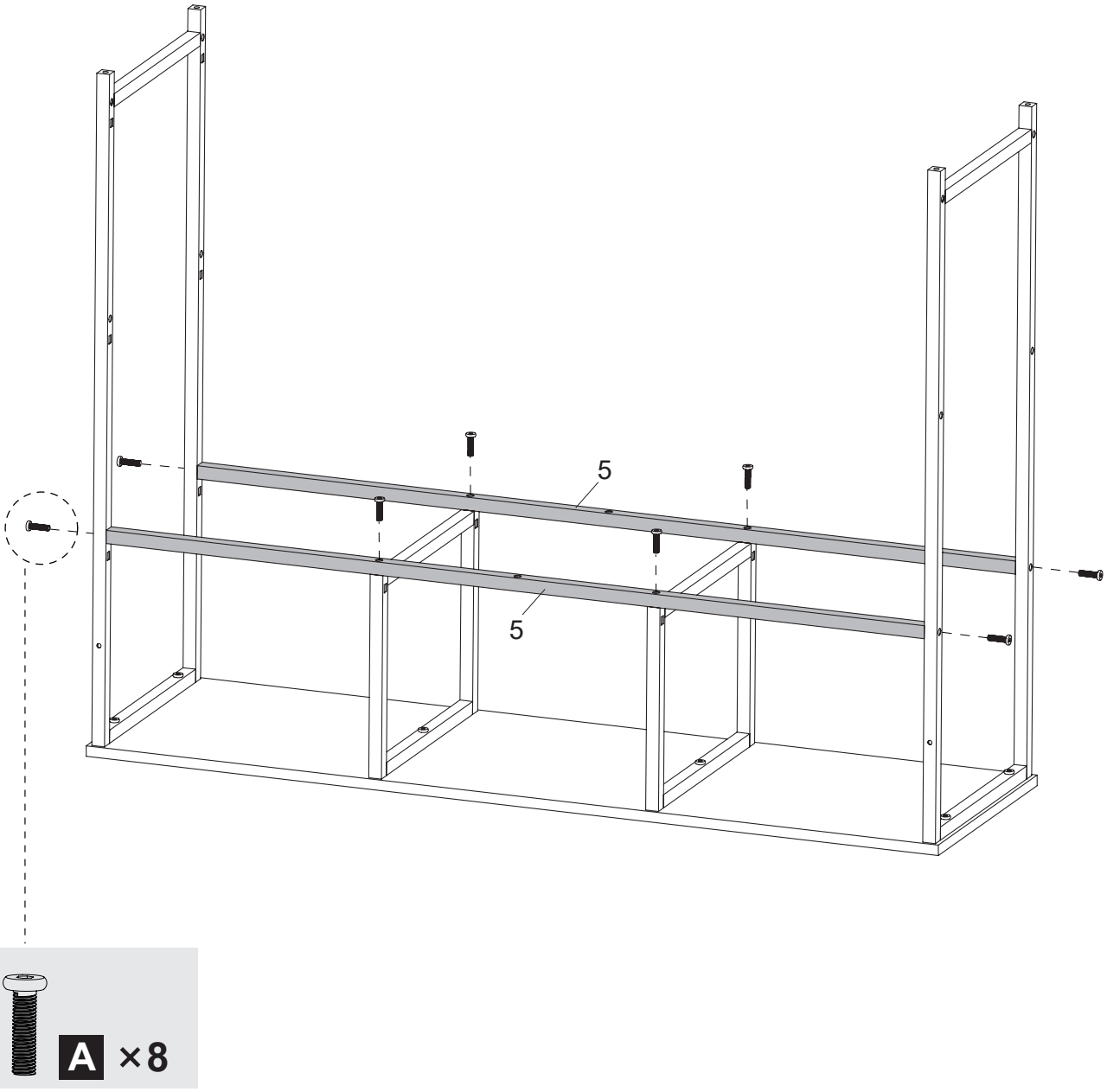

Step 3

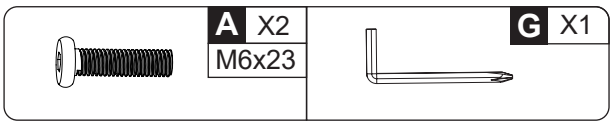

Please do not fully tighten screws until all screws are in place.

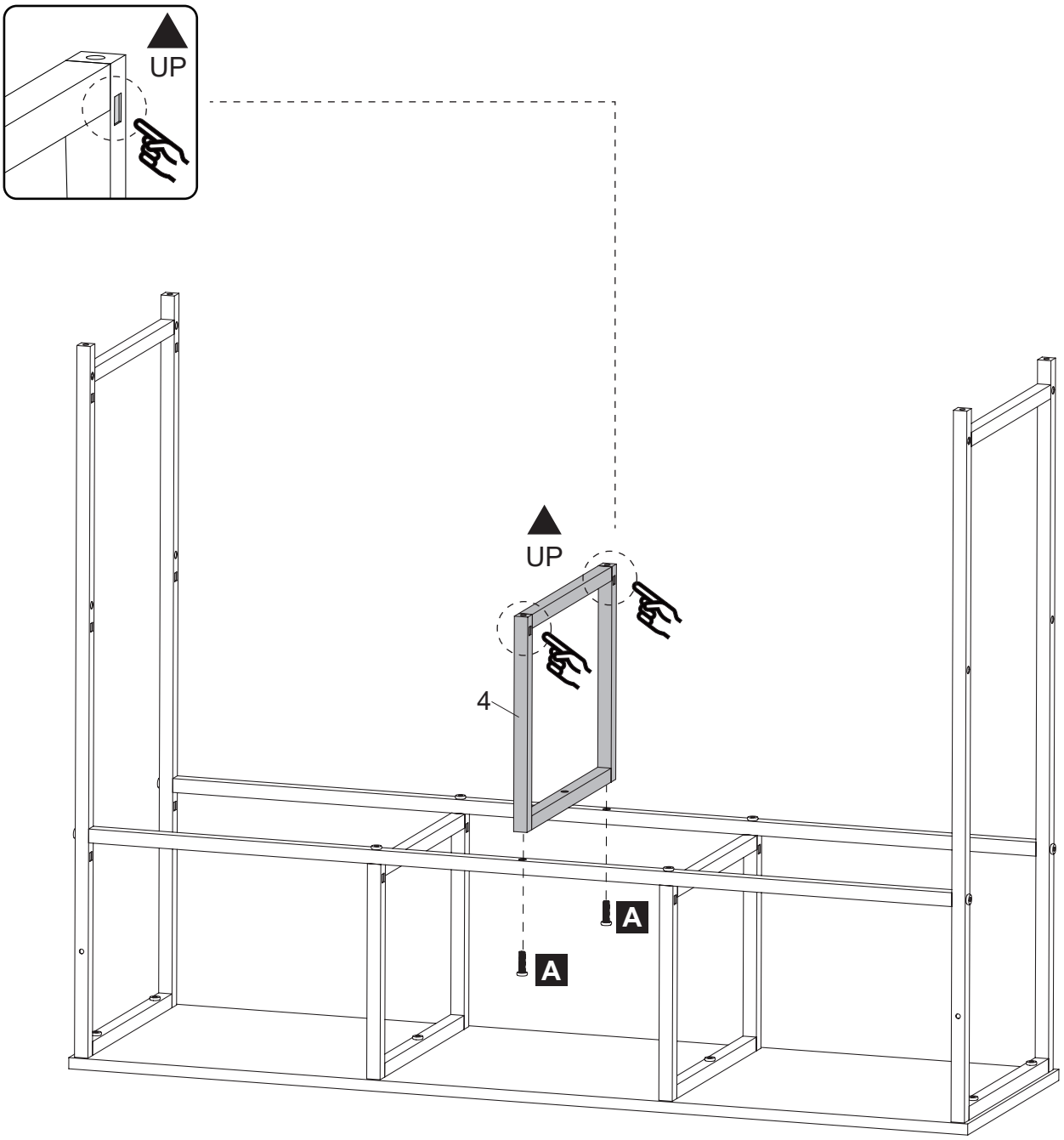

Step 4

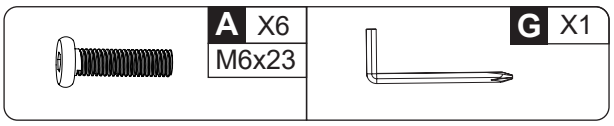

Please do not fully tighten screws until all screws are in place.

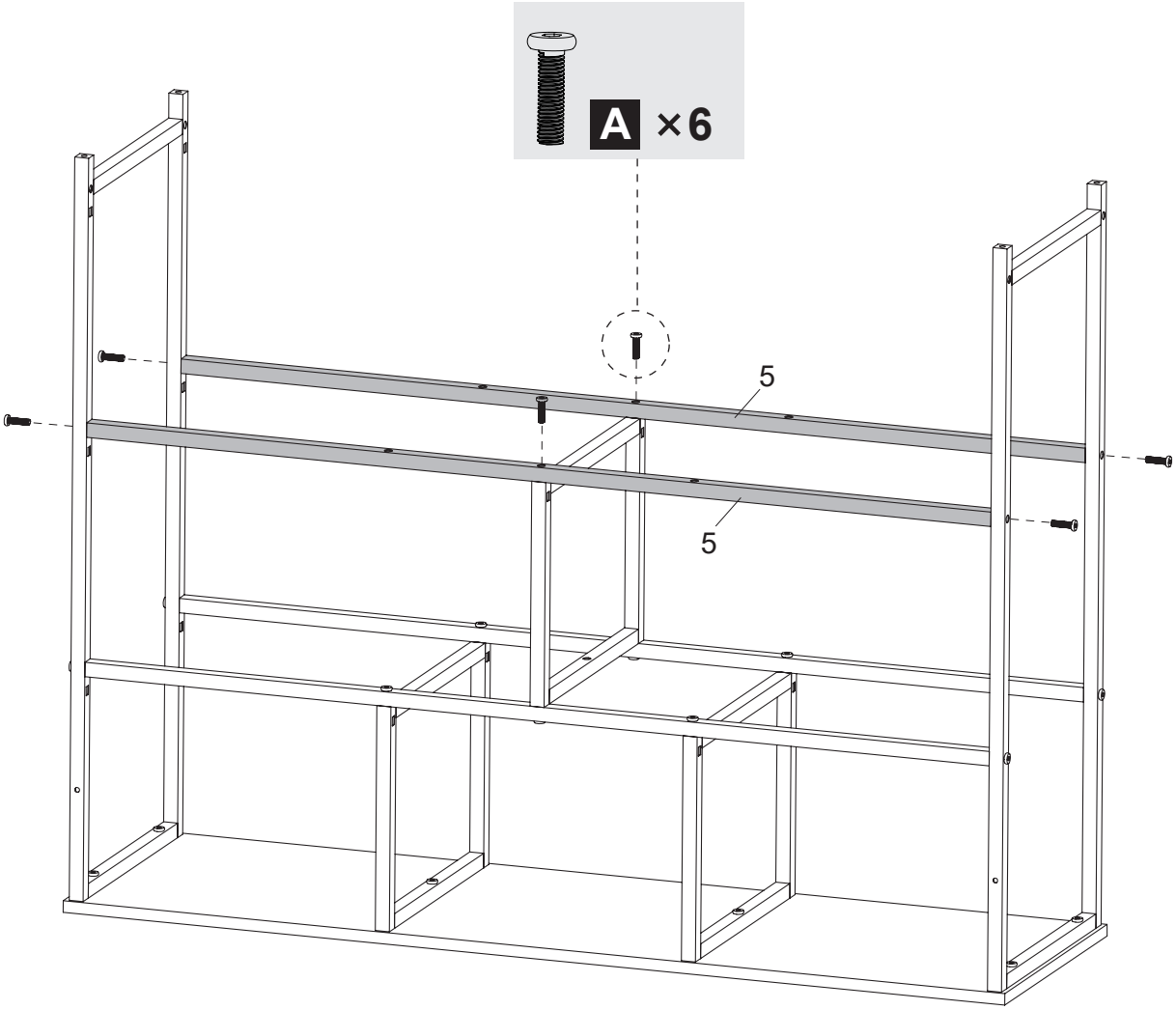

Step 5

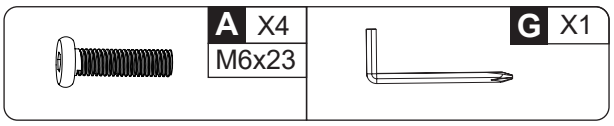

Please do not fully tighten screws until all screws are in place.

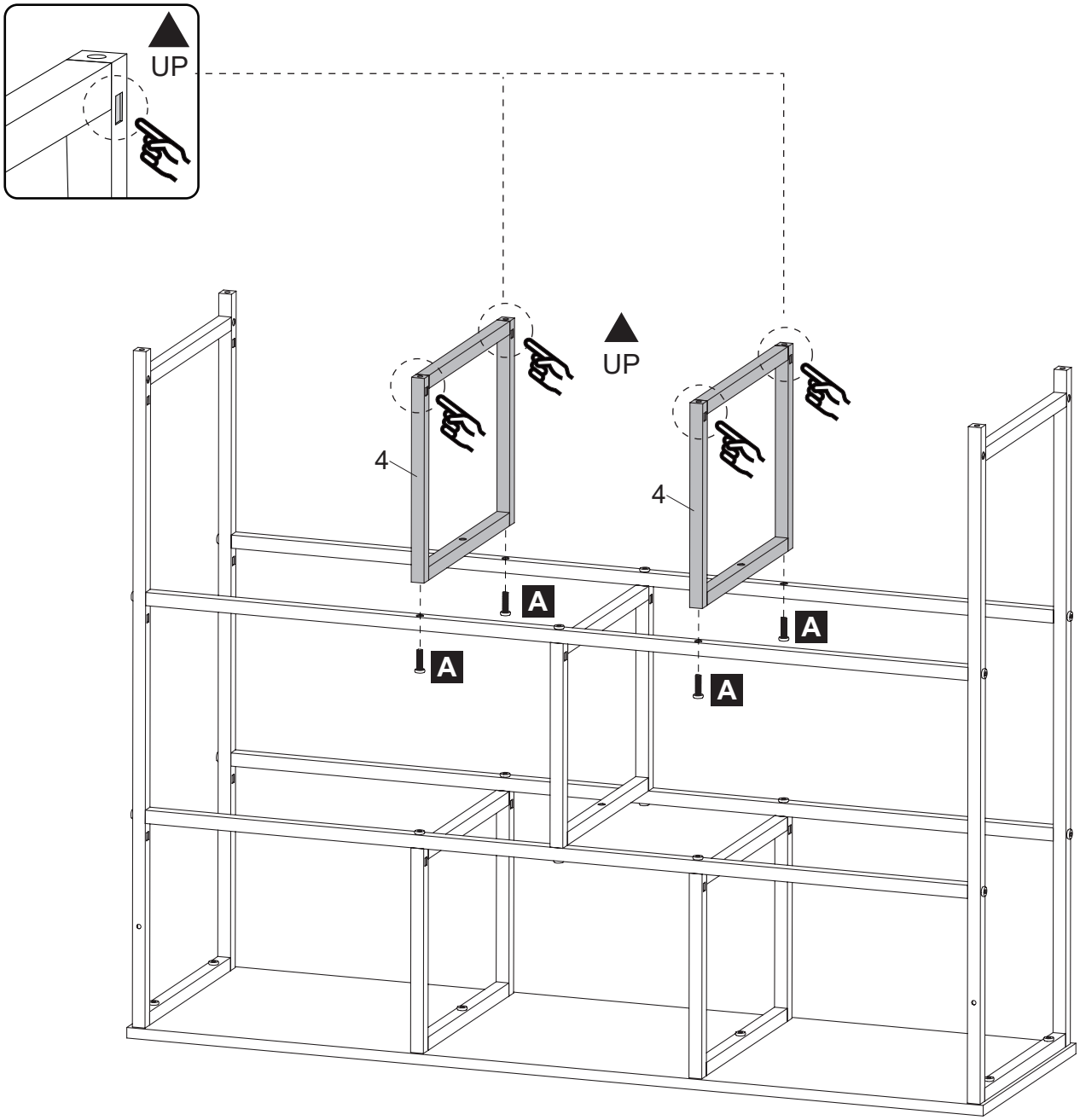

Step 6

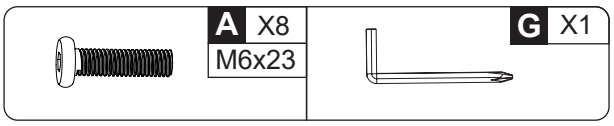

Please do not fully tighten screws until all screws are in place.

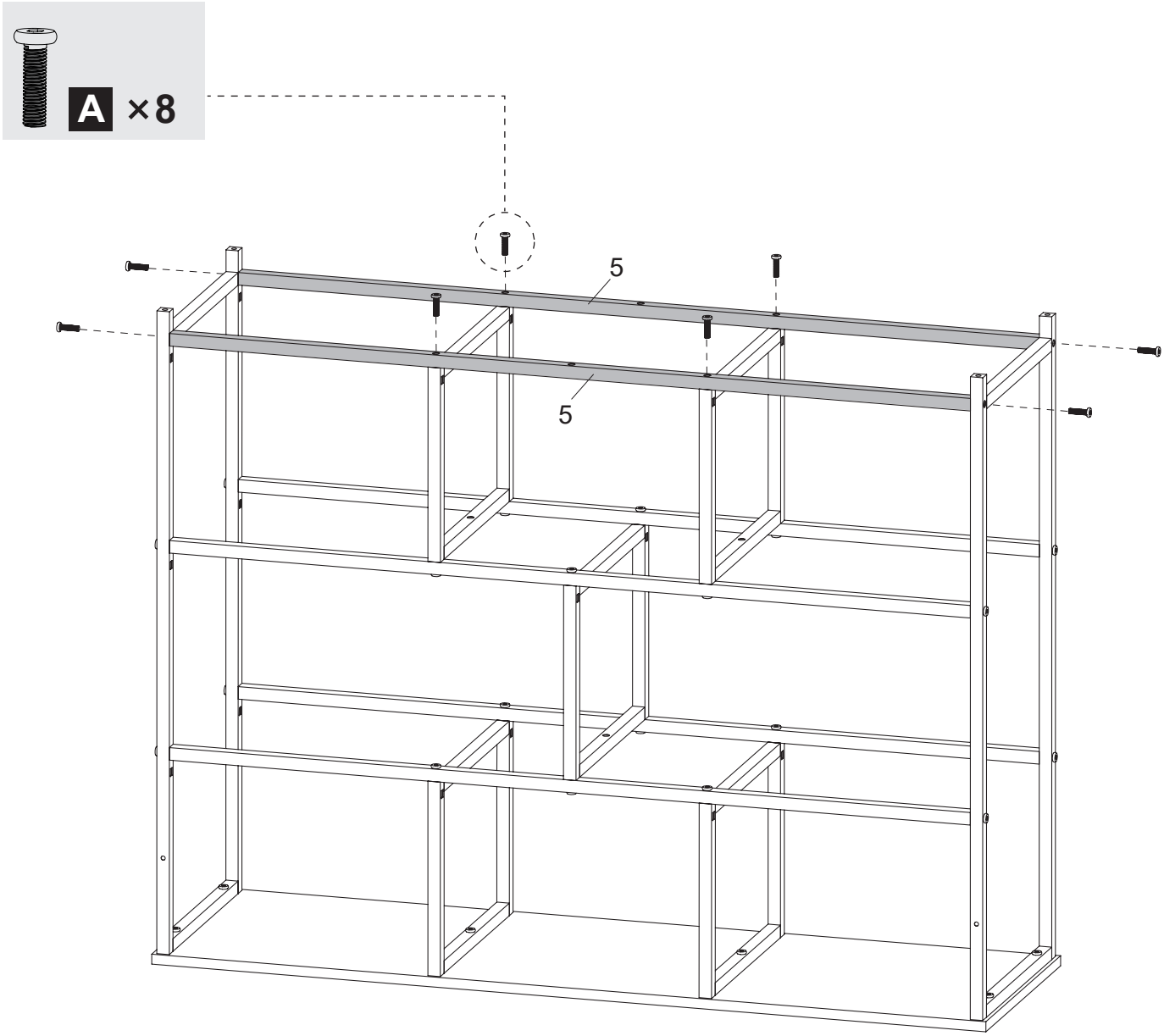

Step 7

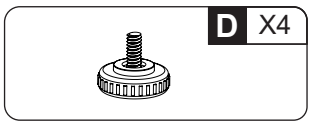

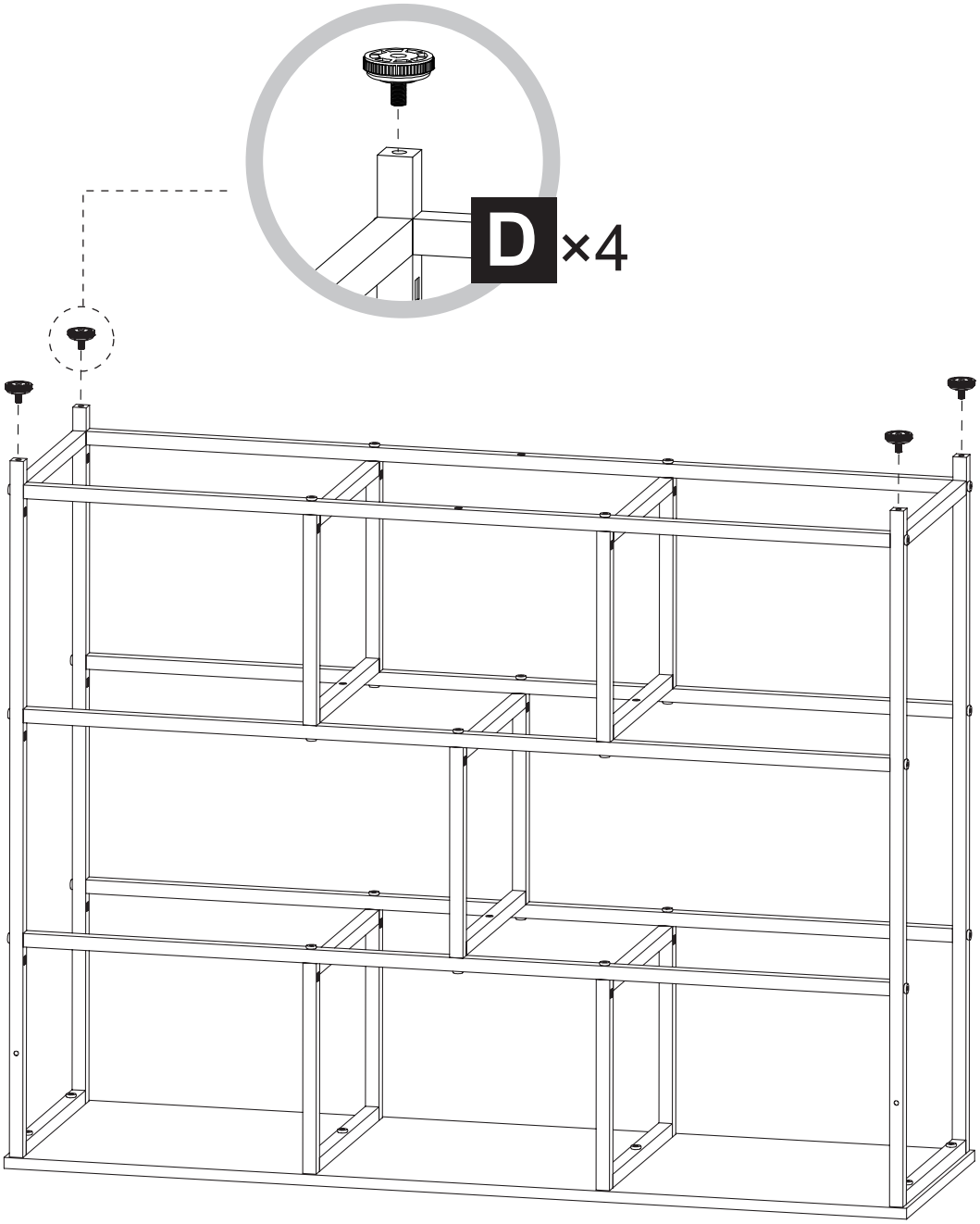

Step 8

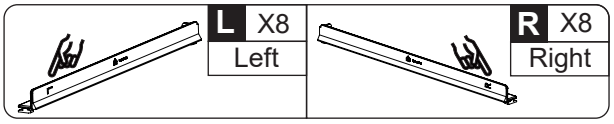

The guide rail is engraved with L(Left) and R(Right).
Please install cautiously according to the instructions.

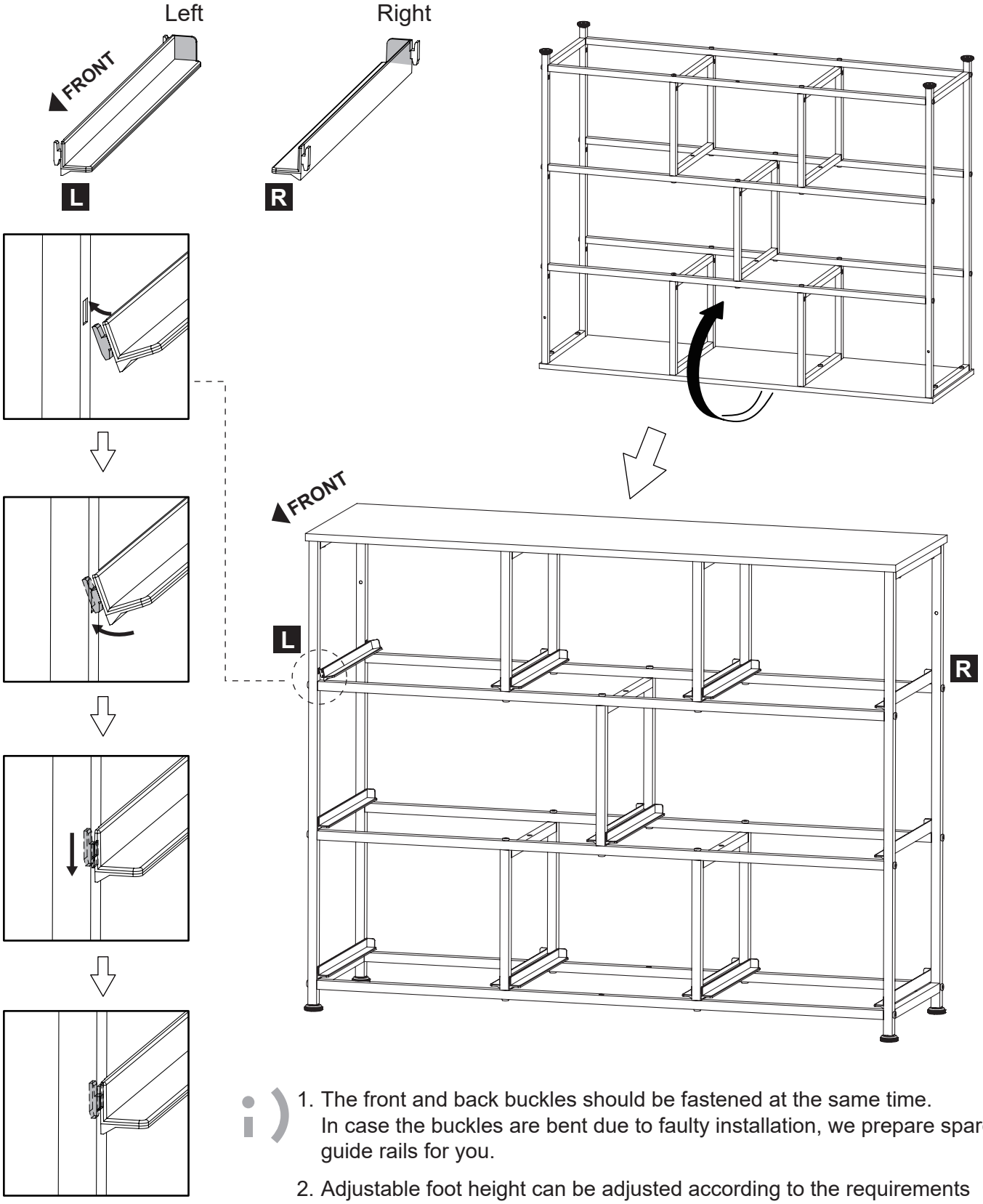

1. The front and back buckles should be fastened at the same time.
   In case the buckles are bent due to faulty installation, we prepare spare guide rails for you.
2. Adjustable foot height can be adjusted according to the requirements of use.

Step 9

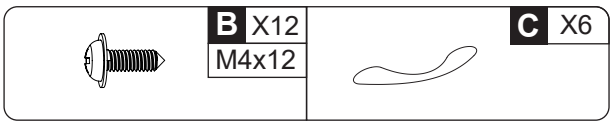

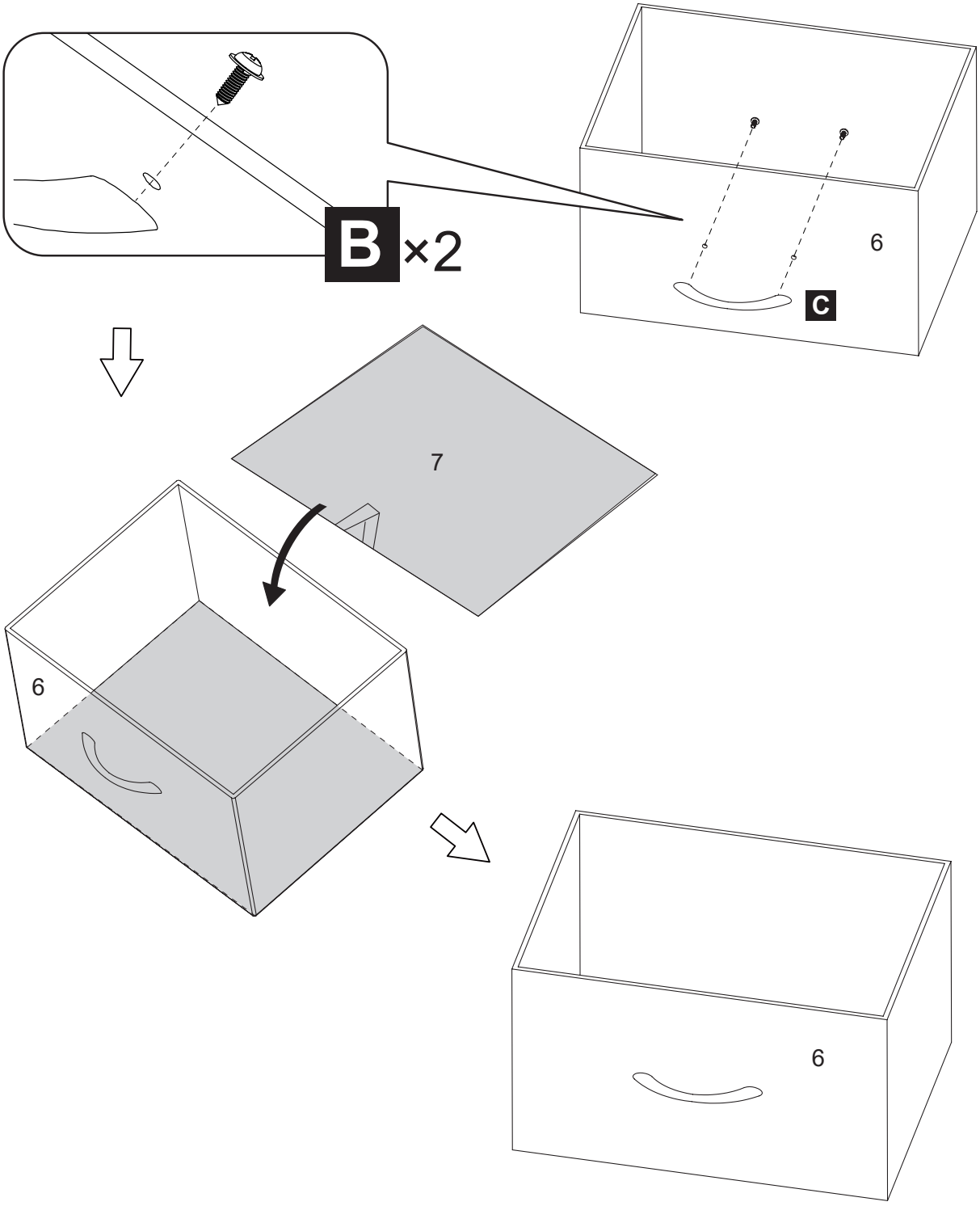

×6

Step 10

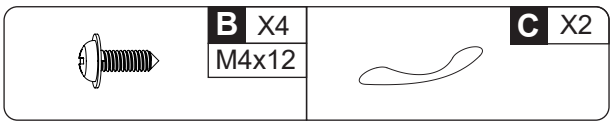

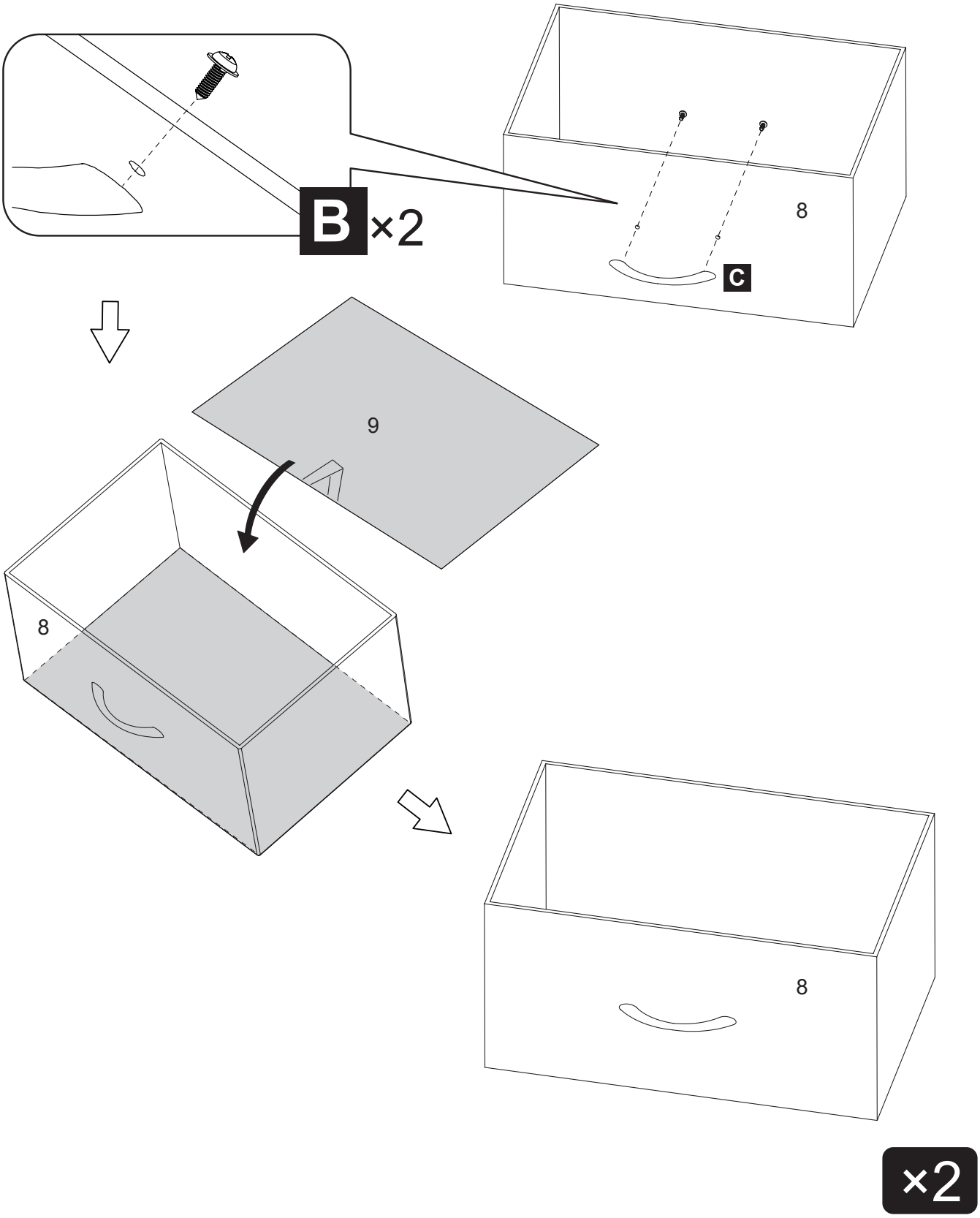

Step 11

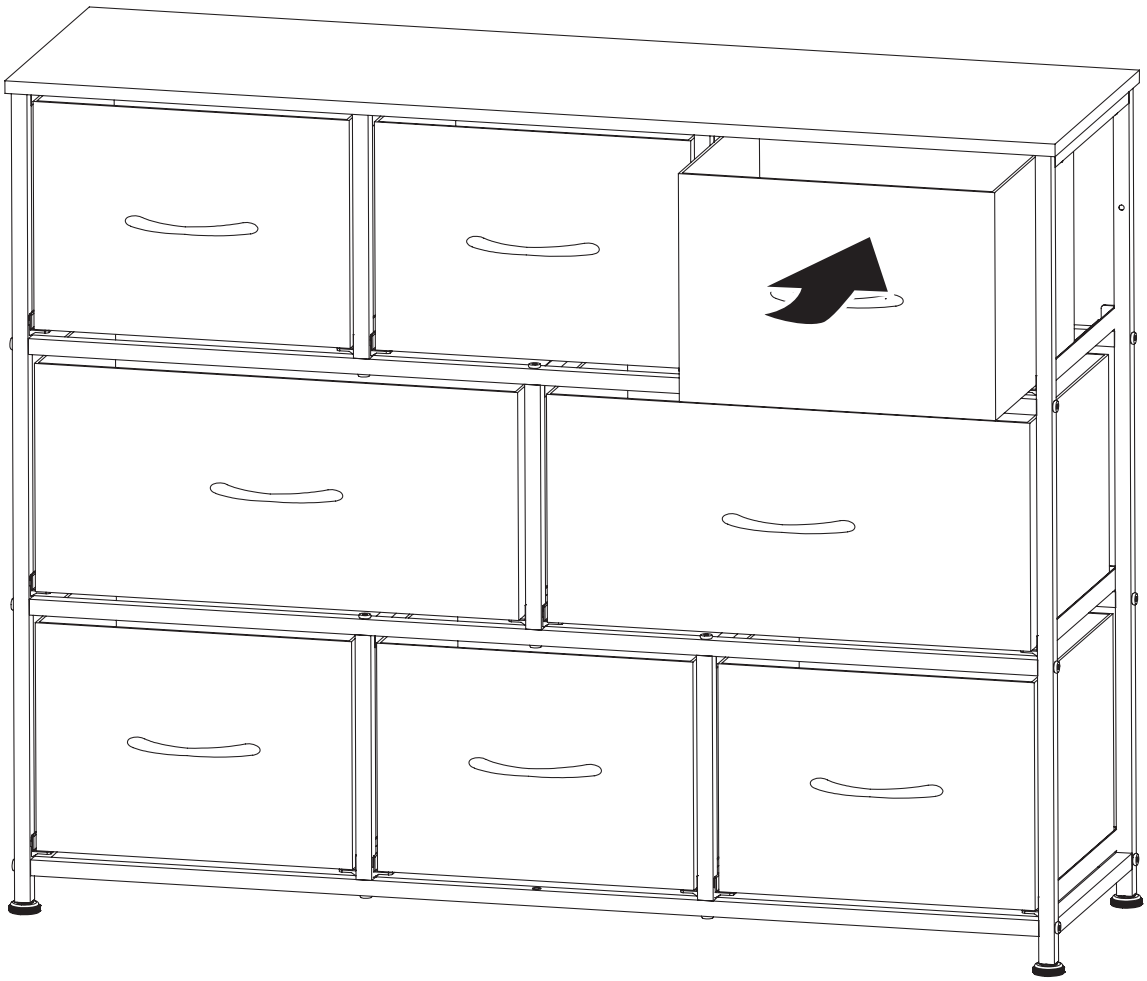

PLEASE INSTALL ANTI-TIP DEVICE AS FOLLOWING STEPS IF YOU NEED

Step 1

Please choose the proper position before assembling.

Step 2

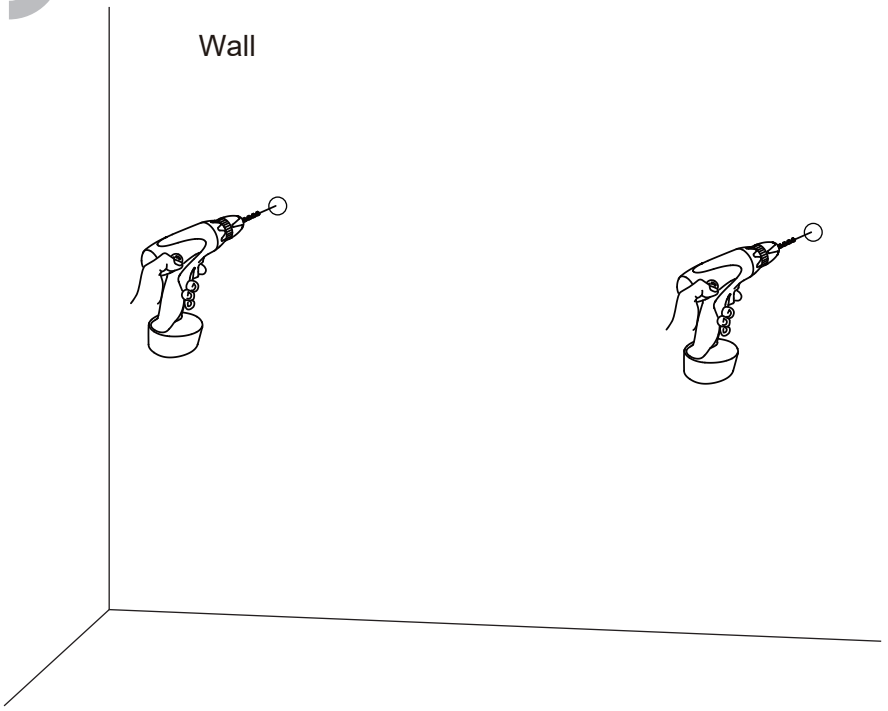

Step 3

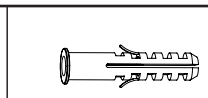

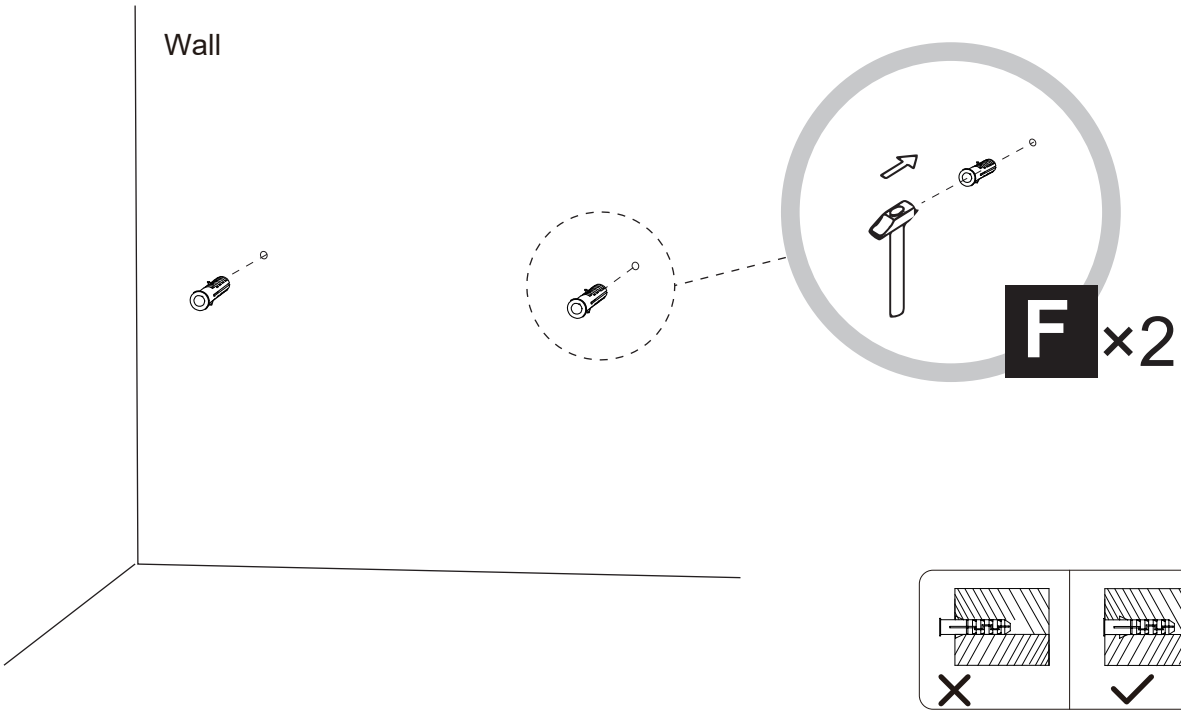

Step 4

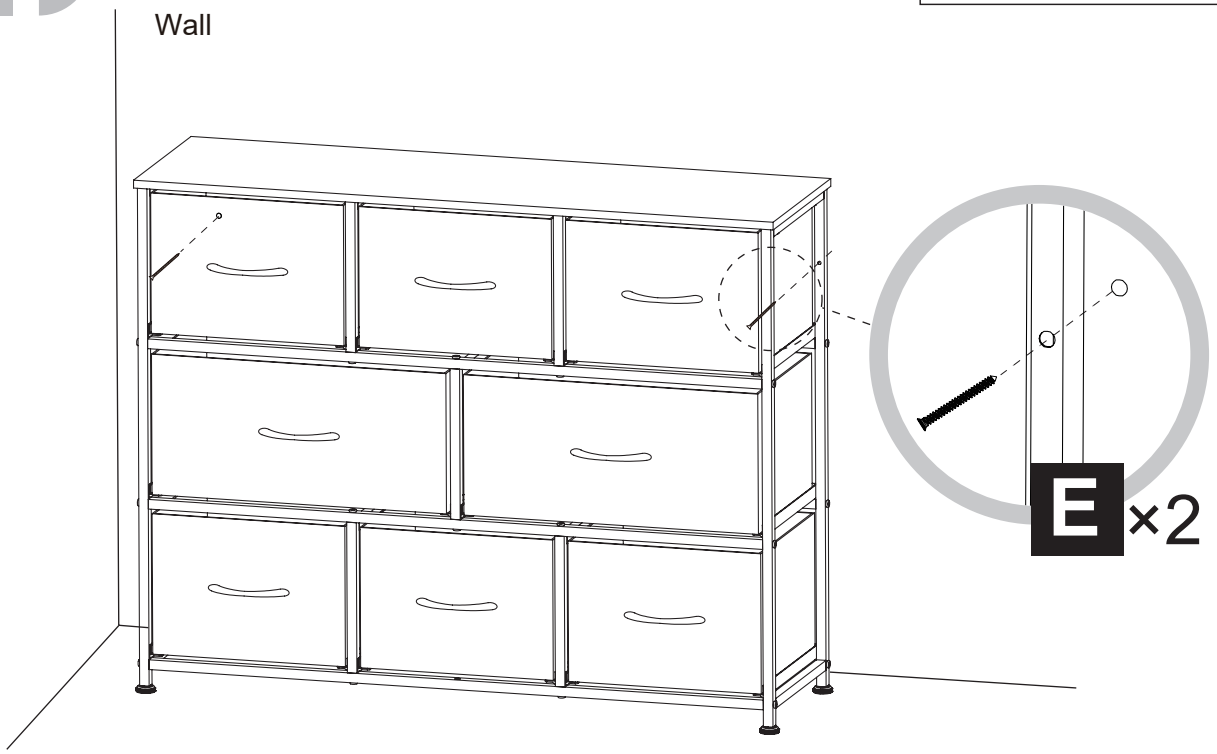

DESIGN IS IN THE DETAILS

Find **5** differences between the **2** images.