Allure-T

YY037-150001

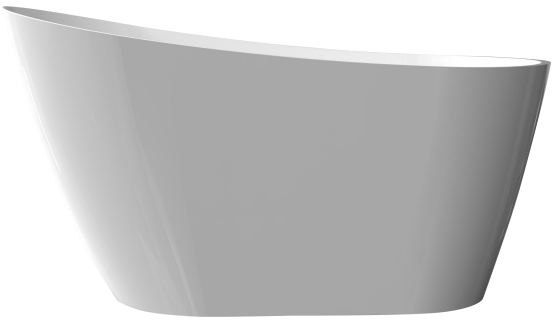

Information

Brand Name	**TONA**	**Model**	**YY037-150001**
Product Name	**Bathtub**	**Specification**	**1500*780*720mm**
Material	**Acrylic**	**N.kg**	**37.6kg**
Color	**White Glossy**	**G.kg**	**41.8kg**
Production Proocess	**Seamiess butt joint**	**G.kg(include pallet)**	**410kg**
Installation Method	**Freestanding**	**Volume**	**0.842m³**
Faucet	**Without faucet**	**Drain**	**130mm**
Component	**Bathtub+Pop up+Overflow hole+Drain Pipe**	**Capacity**	**228L**
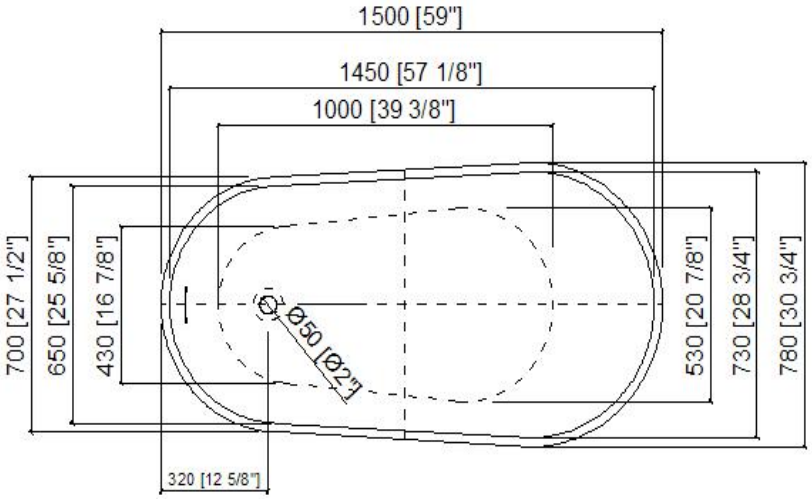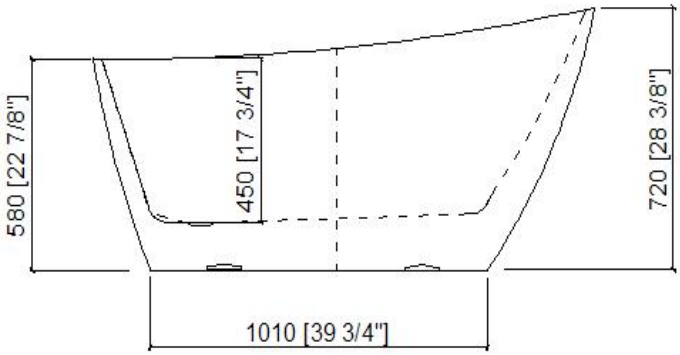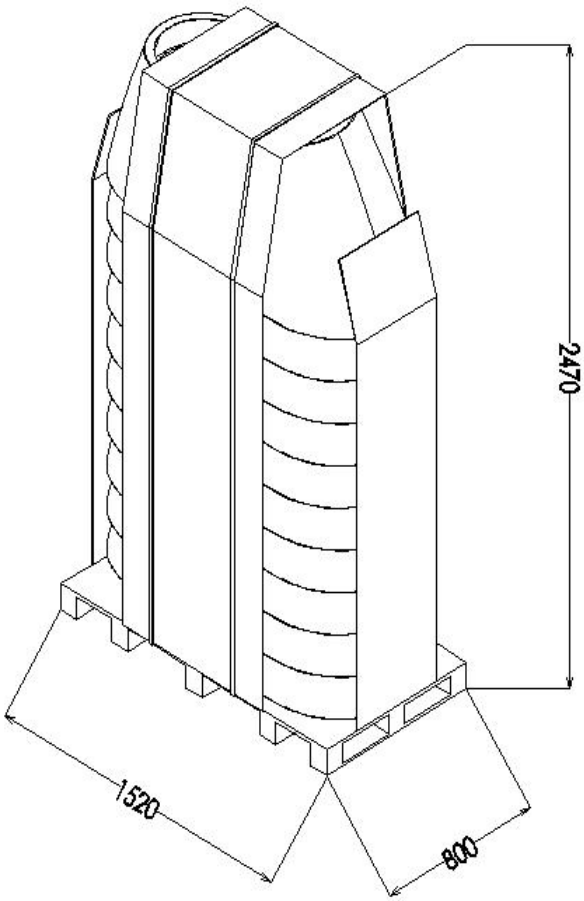
Technical drawing