Installation notes:
Faucet and silicone are not included.
All sizes are subject to tolerance.

Sink assembly
Install the faucet to the top and drains to the sink. Refer to the faucet and drain manufacturer's instructions.
Complete the faucet connections. Run water and check for leaks.
Apply a bead of silicone behind the top surface to the finished wall.

CERAMIC BASIN
Top view of sink

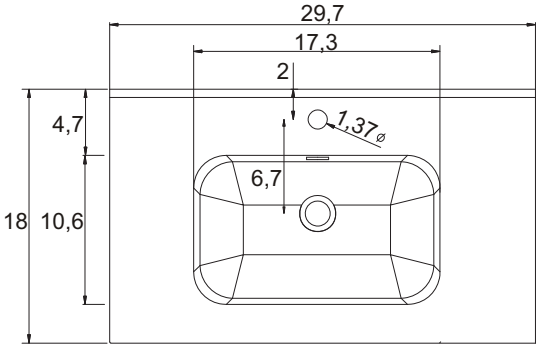

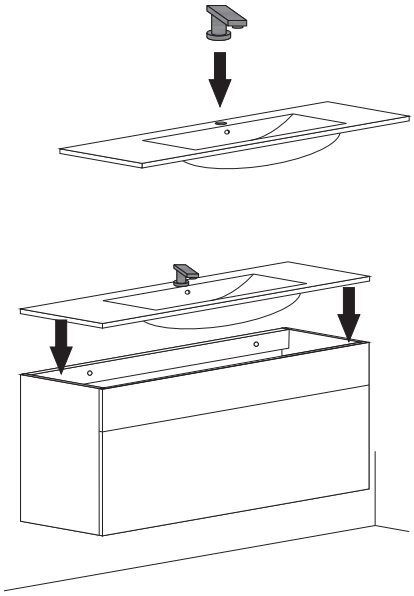
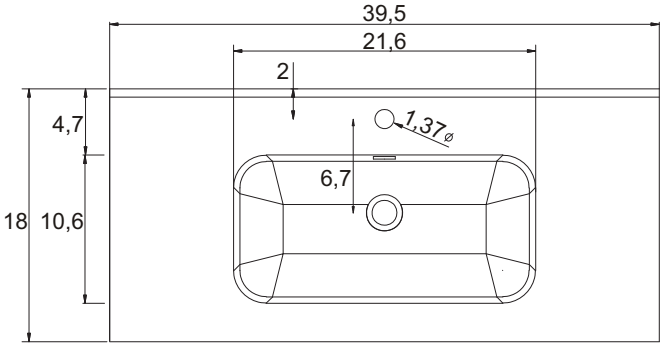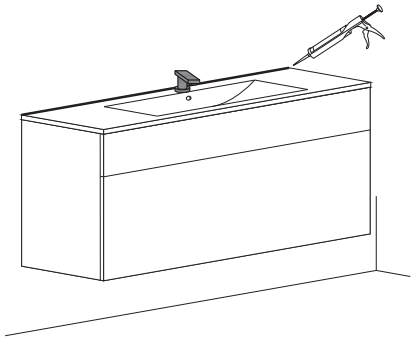
CERAMIC BASIN
Top view of sink