ASSEMBLY INSTRUCTIONS

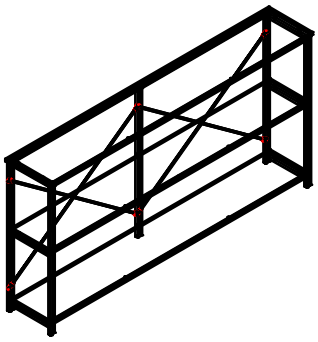

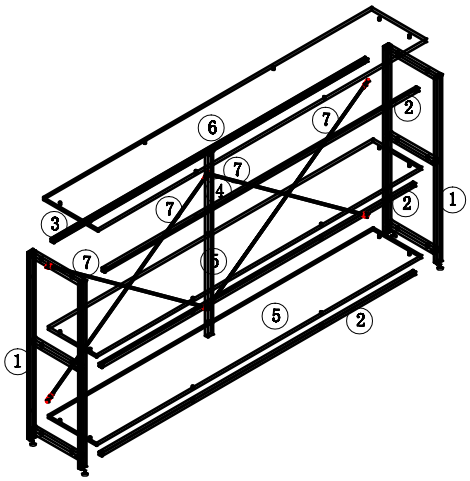

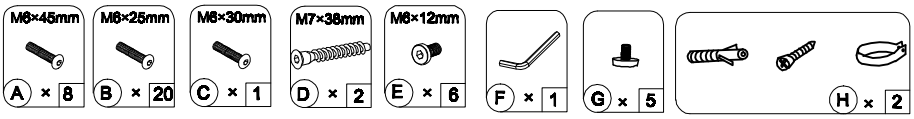

1

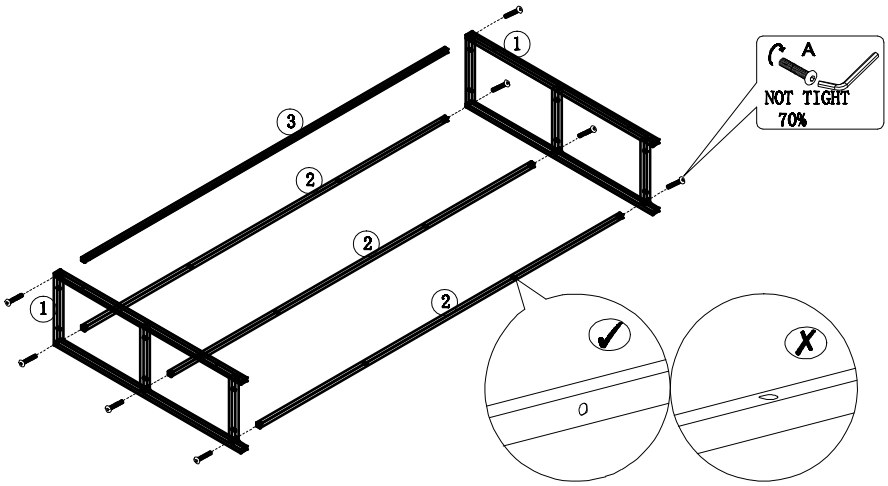

2

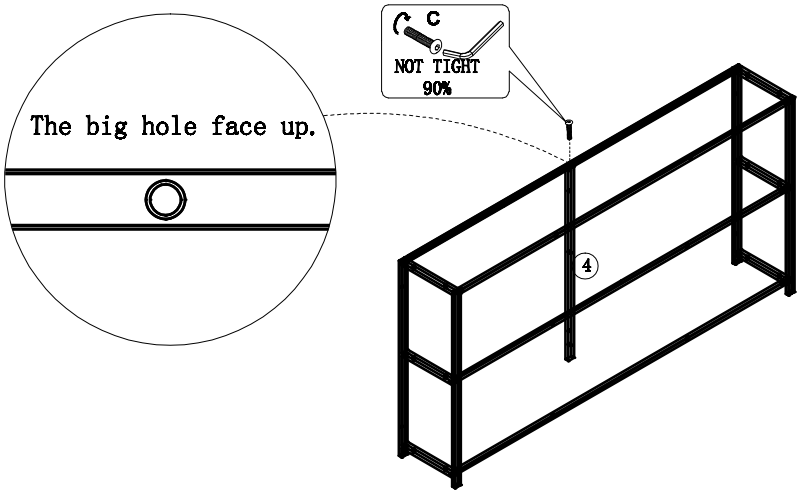

3

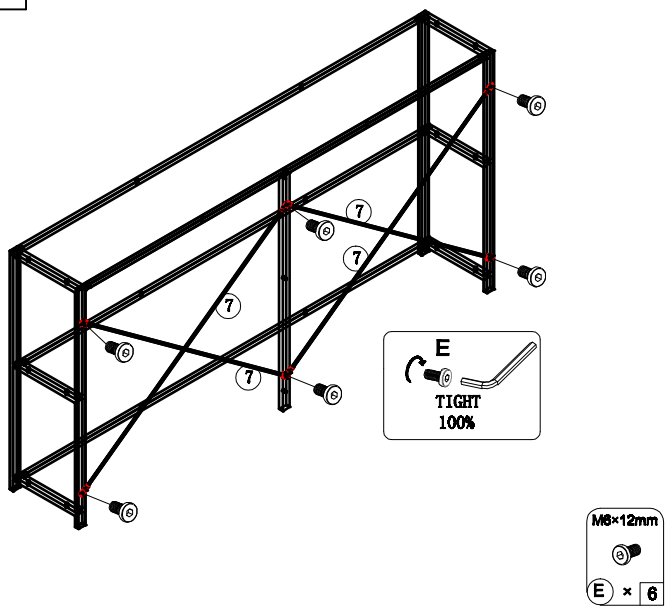

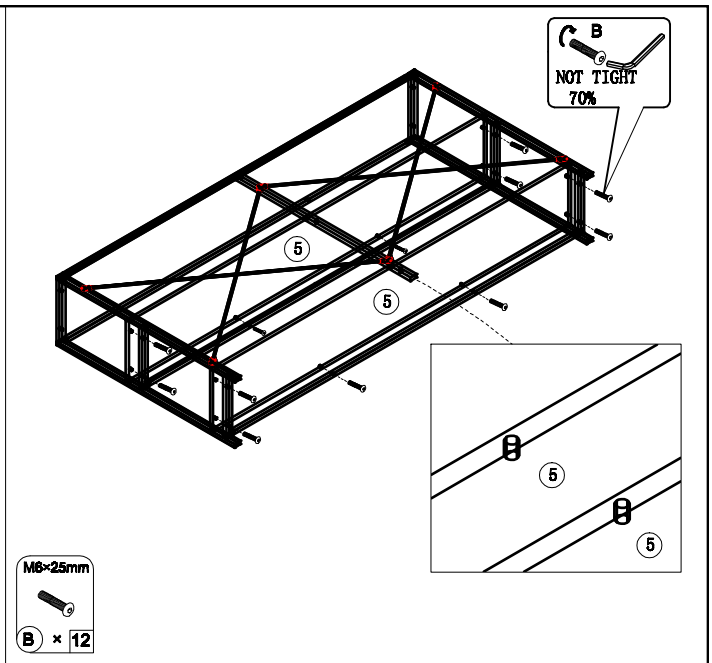

4

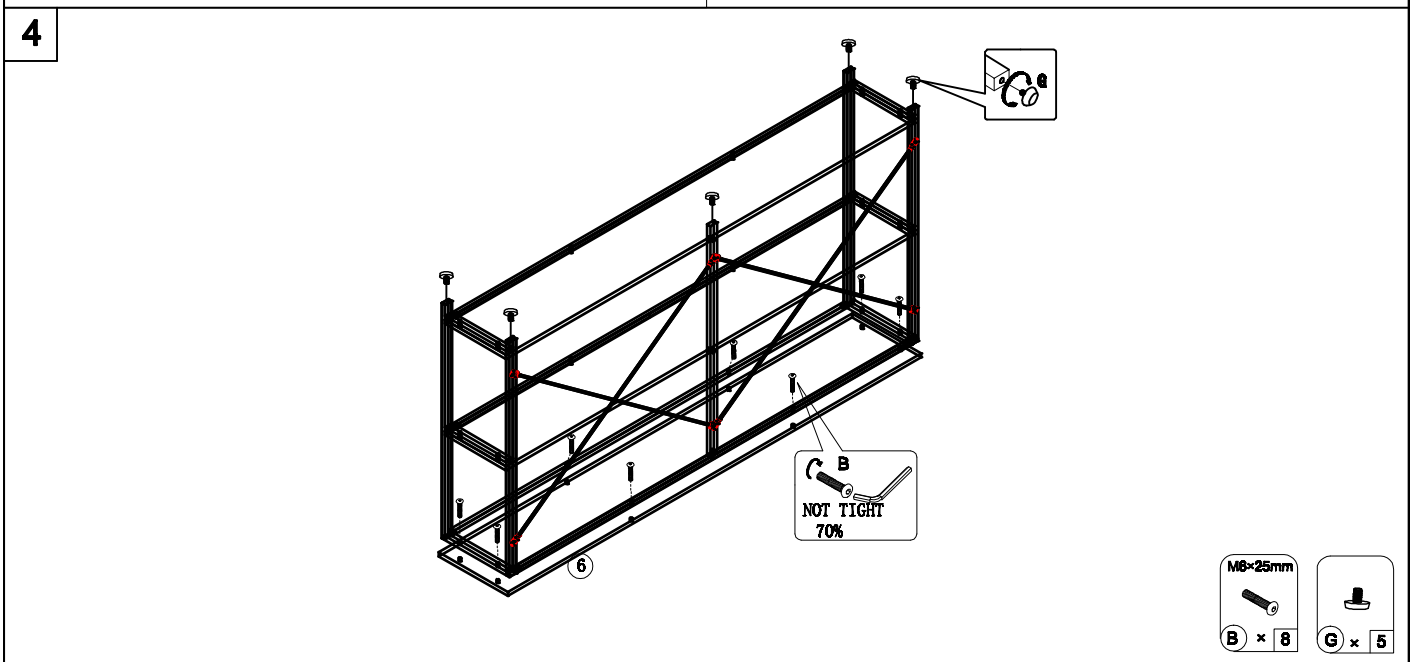

5

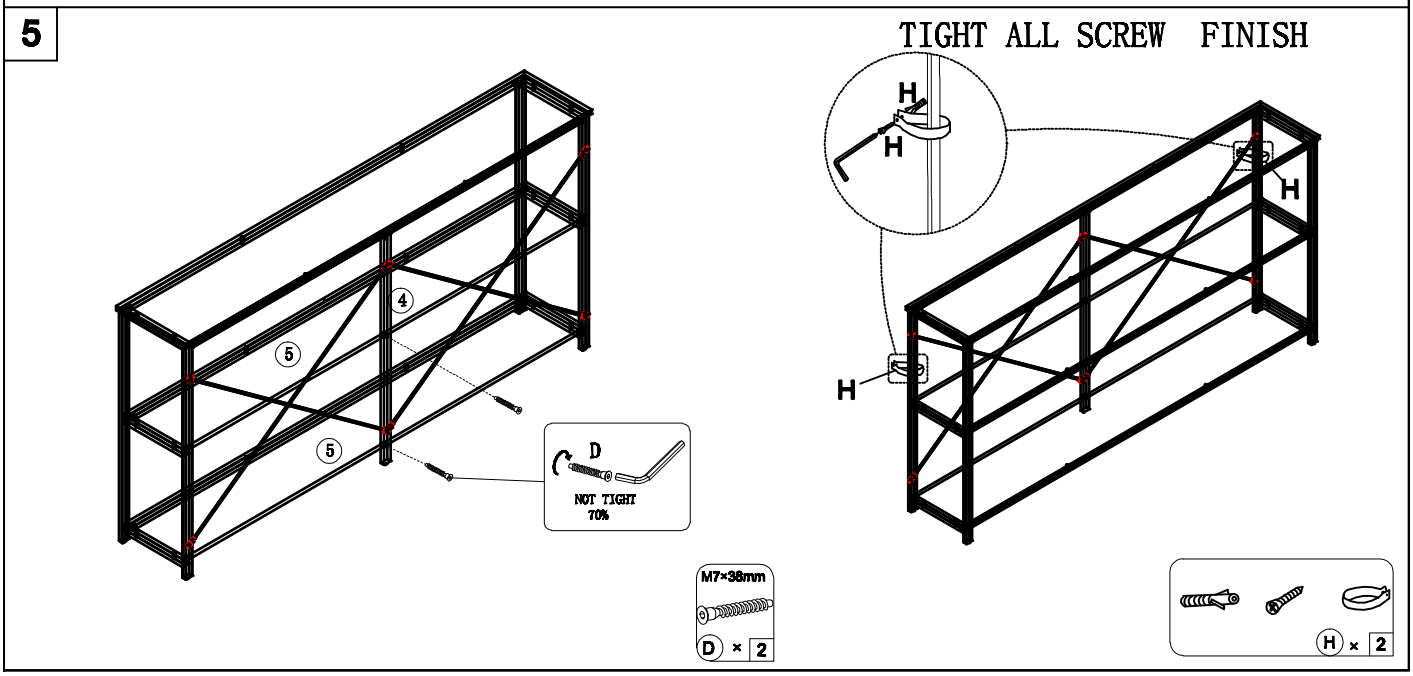

We genuinely appreciate your purchase of our product.Any problem (installation or damage caused by shipping), please feel free to contact us. Our customer service will help to solve the problem for your ASAP Email:support@tribesigns.comcustomer service hotline +14242206888