# ROUND METAL END TABLE WITH 8MM TEMPERED GLASS TOP

Examine all packaging material for small parts that may have come loose during shipment. Periodic checks are recommended to insure that all components are in proper position, tight and free from damage. Keep this assembly instruction for future reference. Adult assembly is required. This product is designed for residential use only.

### HARDWARE LIST

A (8) 1/4" x 15mm Sunk Bolts
B (4) 1/4" x 25mm Sunk Bolts
C (1) Allen Wrench
D (4) Glas Pads

### PARTS LIST

E (1) Table Top Frame
F (1) Glass Top
G (1) Support Ring
H (4) Legs

| PART | QTY | HARDWARE | PART | QTY | HARDWARE |
|---|---|---|---|---|---|
| A | 8 | | B | 4 | |
| C | 1 | | D | 4 | |

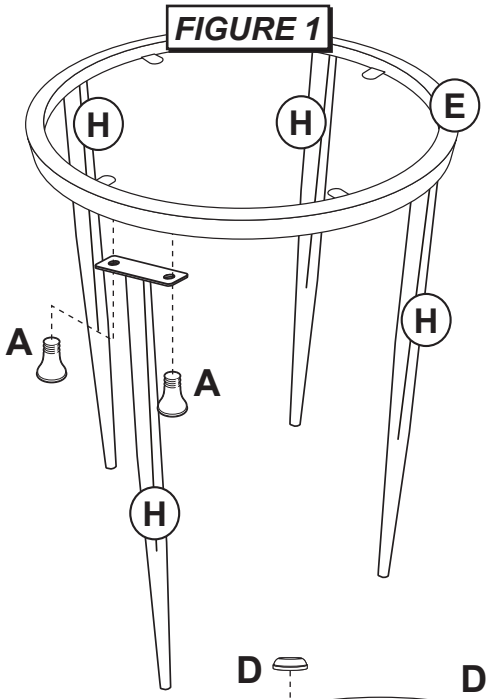


### STEP 1 - Figure 1

Begin assembly by attaching Legs (H) to Table Top Frame (E) using 2 Sunk Bolts (A) per leg. Do not tighten bolts at this time.

### STEP 2 - Figure 2

Attach Support Ring (G) to Legs (H) using 1 Sunk Bolt (B) per leg. Tighten all bolts from steps 1 and 2 with Allen Wrench (C) provided.

### STEP 3 - Figure 2

Attach Glass Pads (D) to tabs on Table Top Frame (E).

### STEP 4 - Figure 3

Carefully place Glass Top (F) down into Table Top Frame (E). The assembly is now complete.

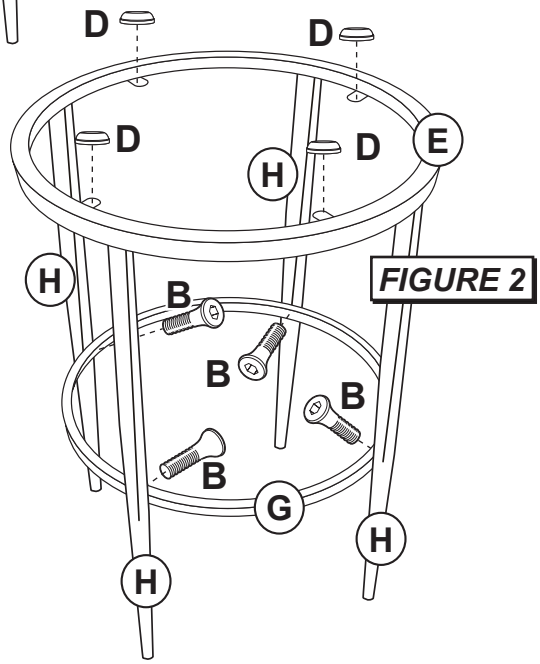


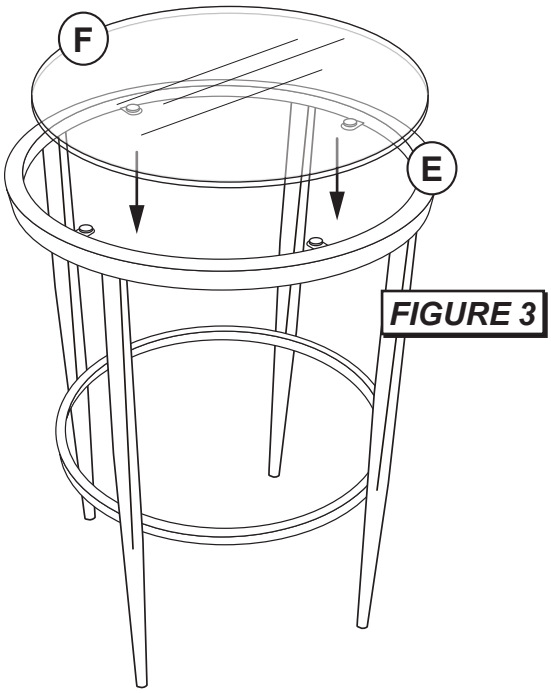


**CARE & MAINTENANCE:** The touch of a soft cloth is all the maintenance the finish will ever need. Please do not use harsh or abrasive cleaners for polishing, as they may cause damage to the finish. Periodic checks are recommended to make sure that all hardware is securely tightened.