67077 MIRROR JEWELLERY CABINET

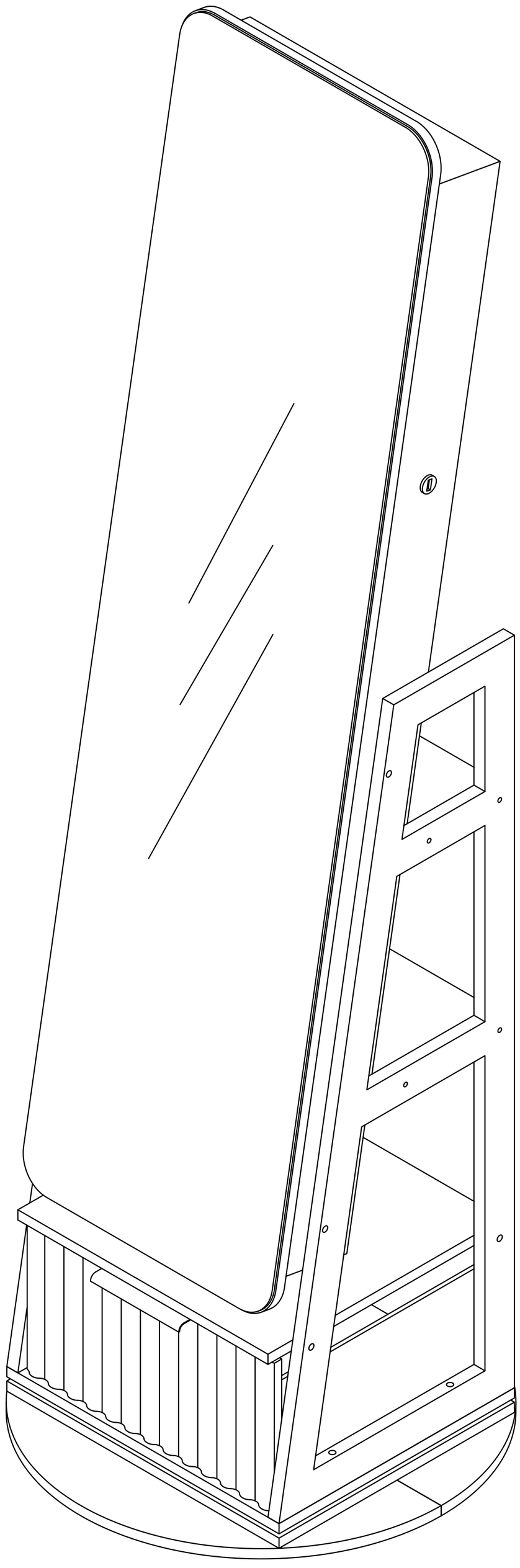

Hardware list

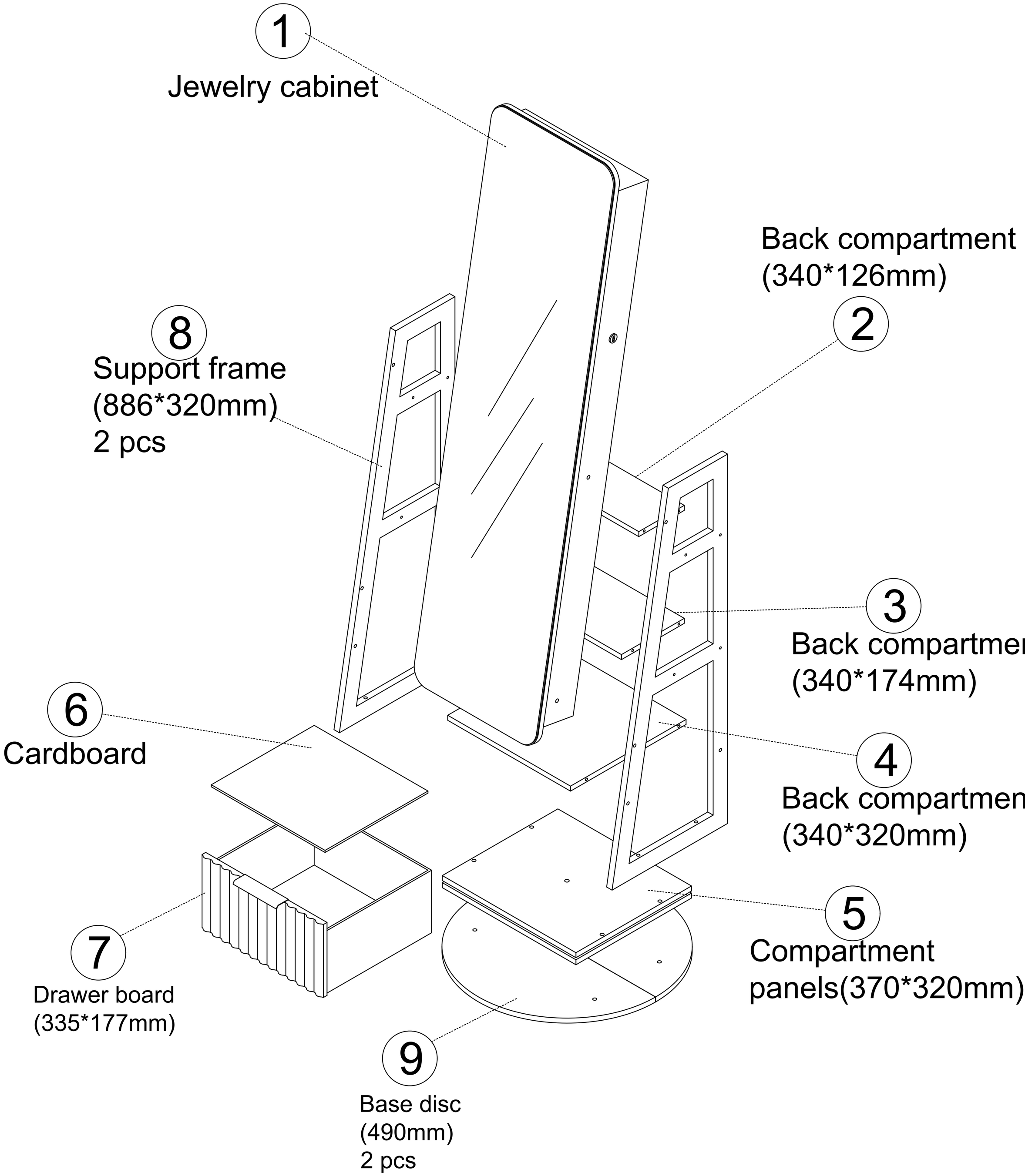

Accessories list

A	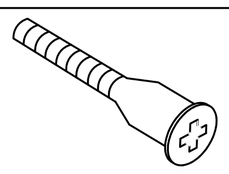	Screw （5x40mm）	12 Pcs
B		Key	1 Pcs
C	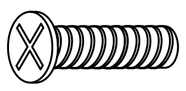	Cross machine wire （6x22mm）	8 Pcs
D	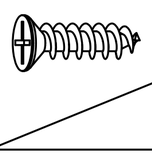 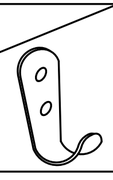	Screw & Hooks （3x10mm）	4 Pcs / 2 Pcs
E	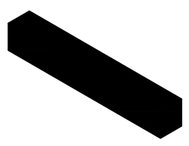	Non-slip pads （340x6x6mm）	2 Pcs
F	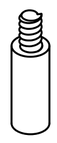	Countersunk head tapping screws（8x20mm）	2 Pcs
G	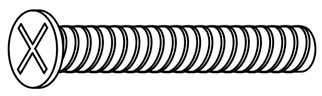	Cross machine wire （6x50mm）	4 Pcs
H	Anti tipping hardware 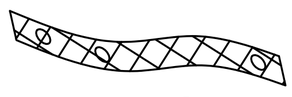 x1 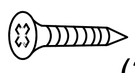 x1 (3x10mm)  x2 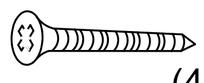 x1 (4x45mm) 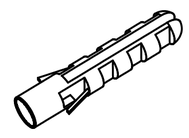 x1		
I	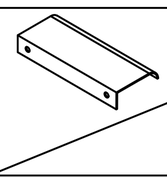 	Screw & Handle （3x10mm）	1 Pcs / 2 Pcs

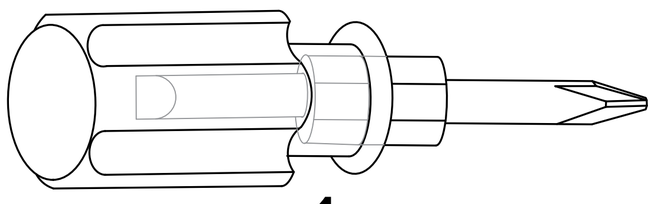

1pcs

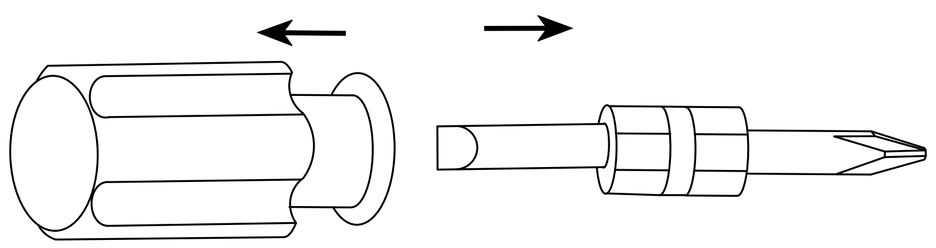

Double-head screwdriver, use as required

Step 1

A	(5*40mm)x 6

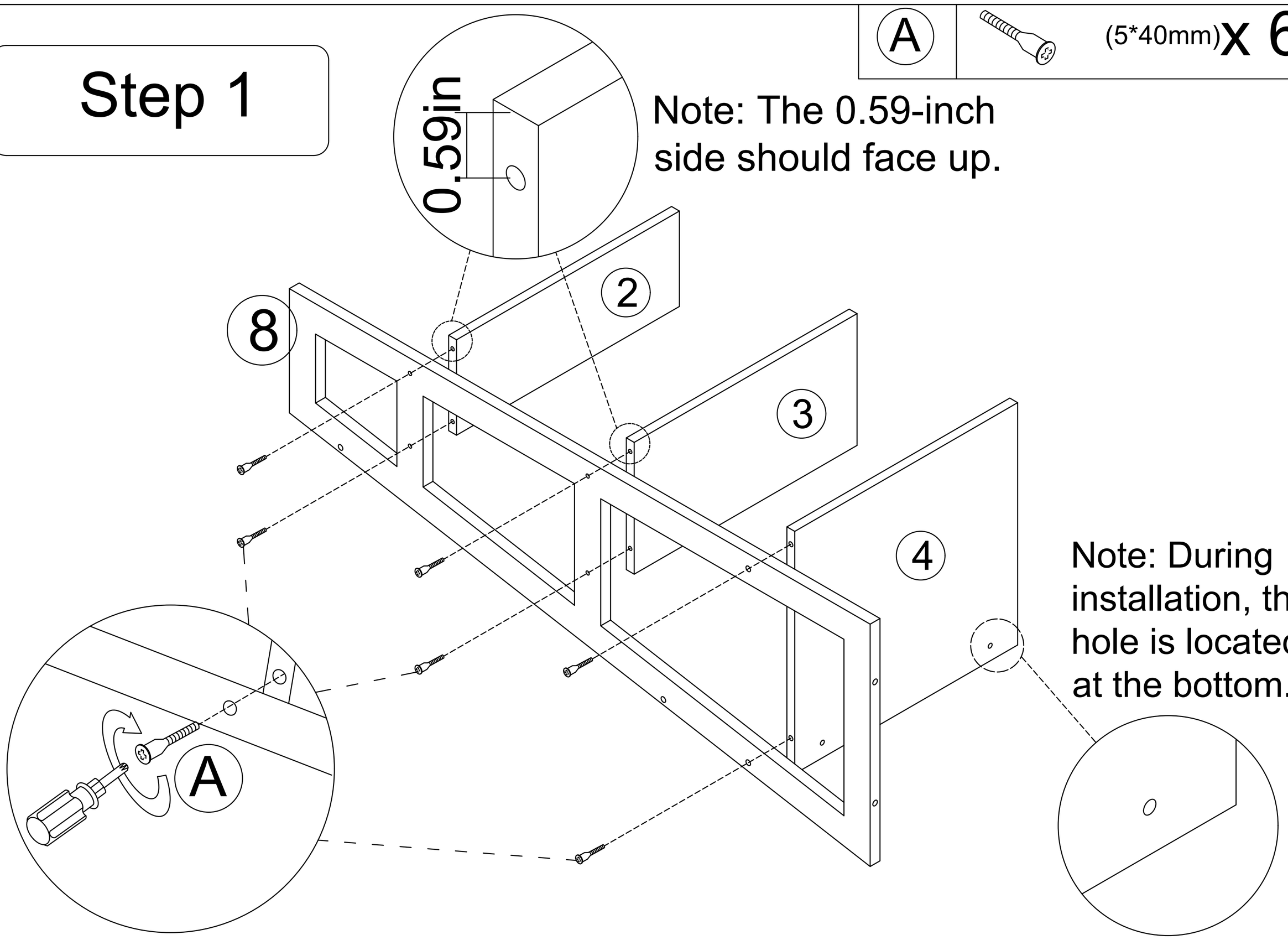

Step 2

A	(5*40mm)x 6

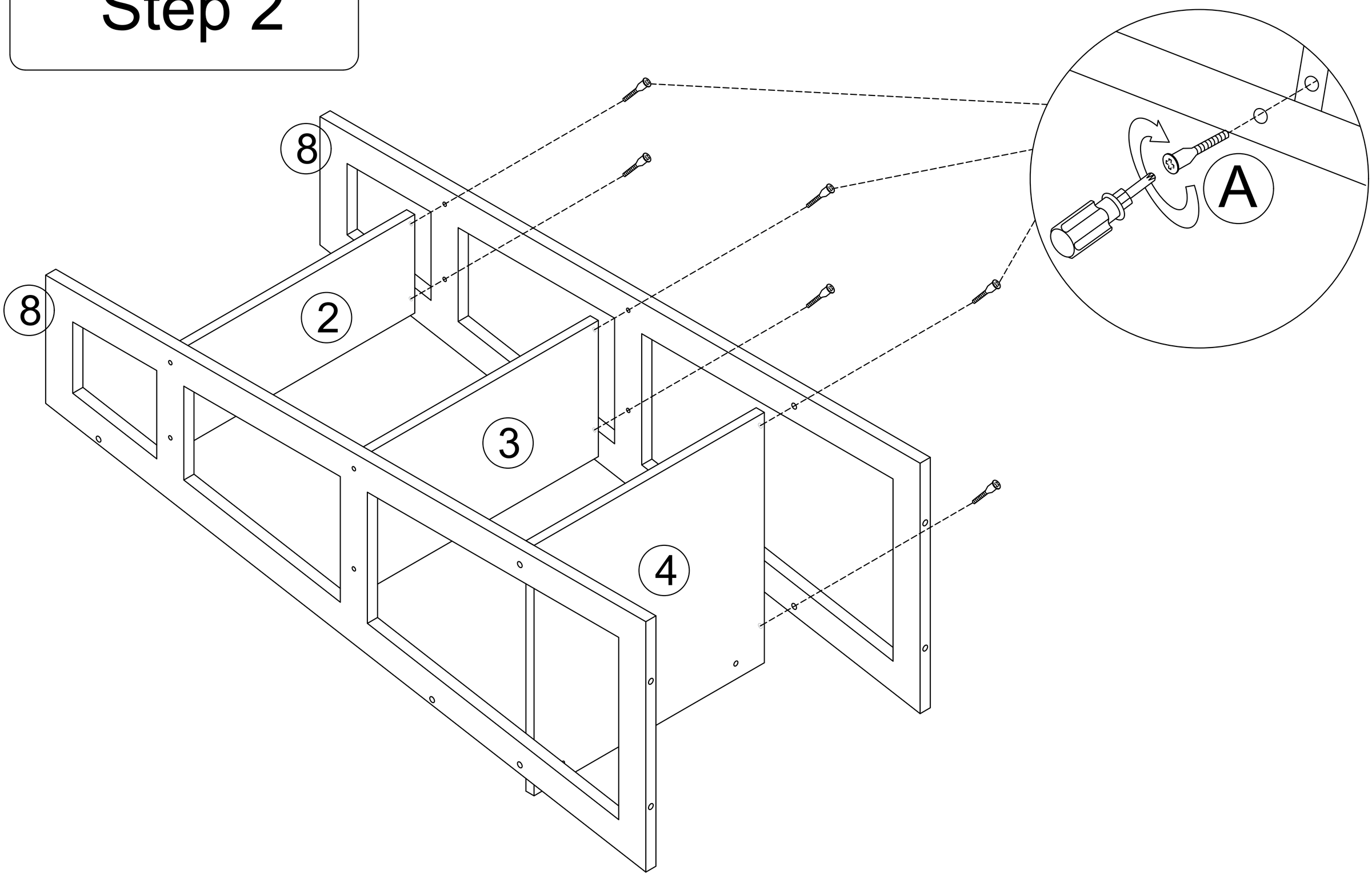

Step 3

C (6*22mm) x 4

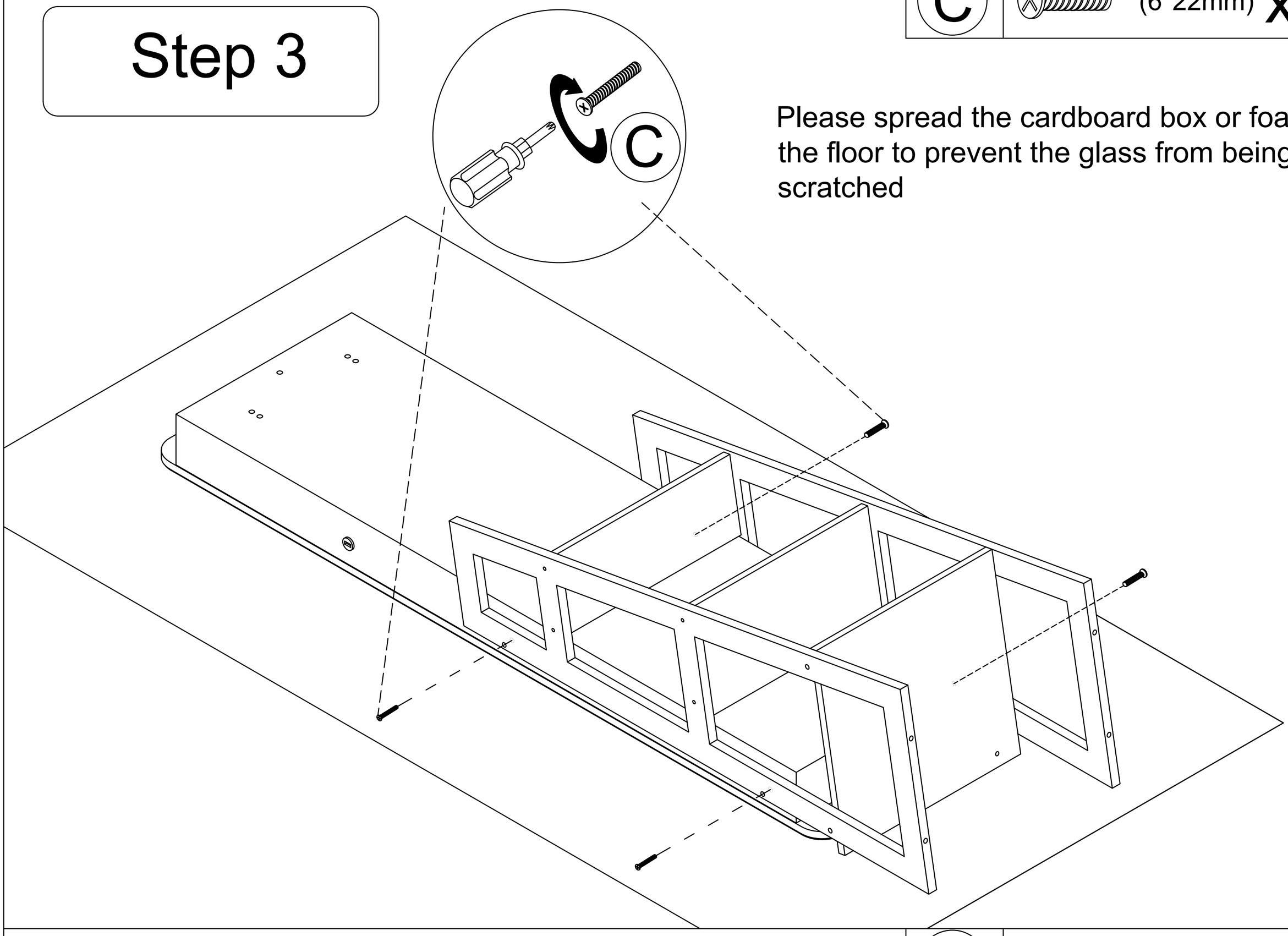

Please spread the cardboard box or foam on the floor to prevent the glass from being scratched

C (6*22mm) x 4

Step 4

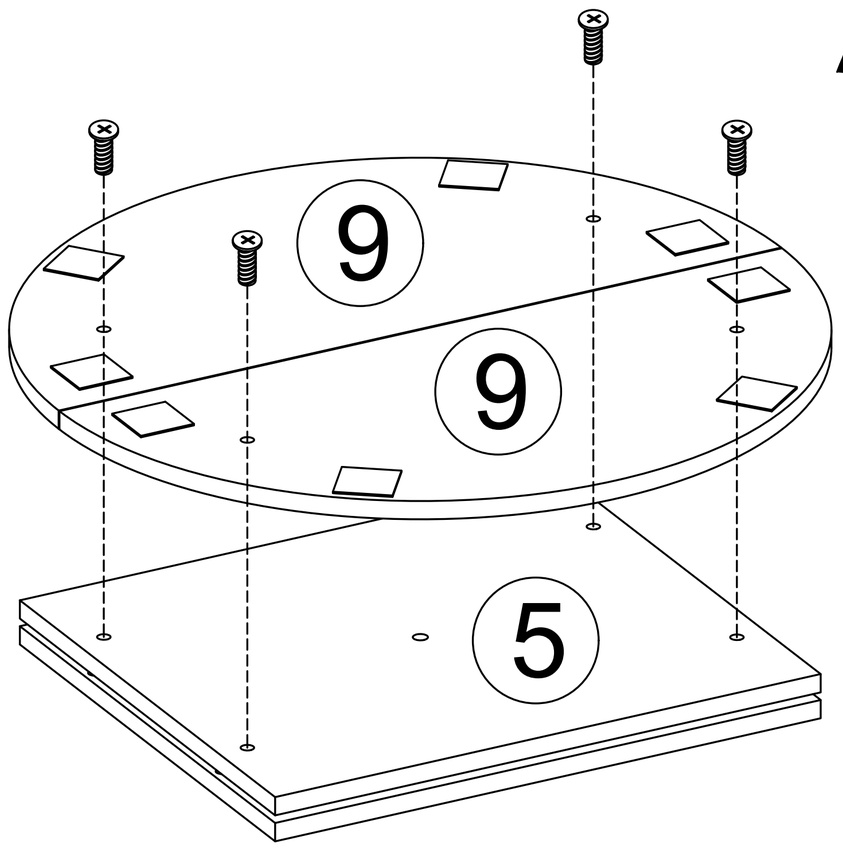

Turn the plank and screw it on

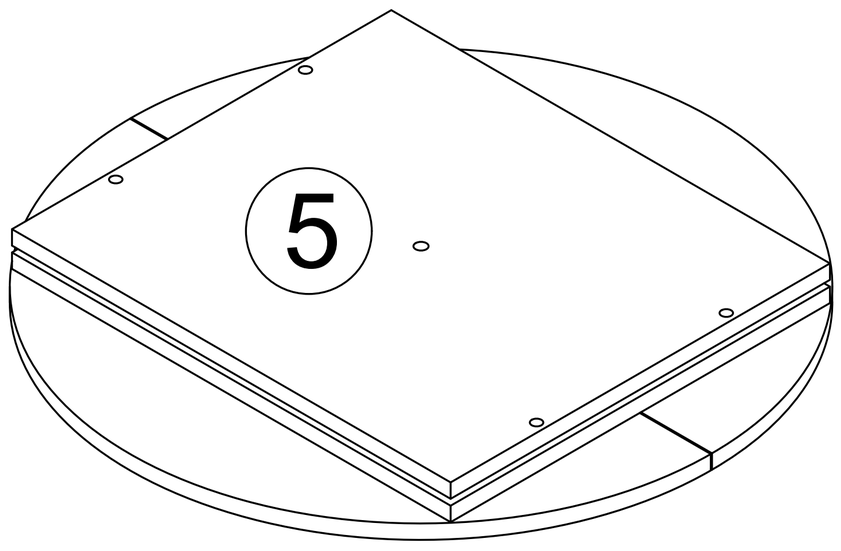

Step 5

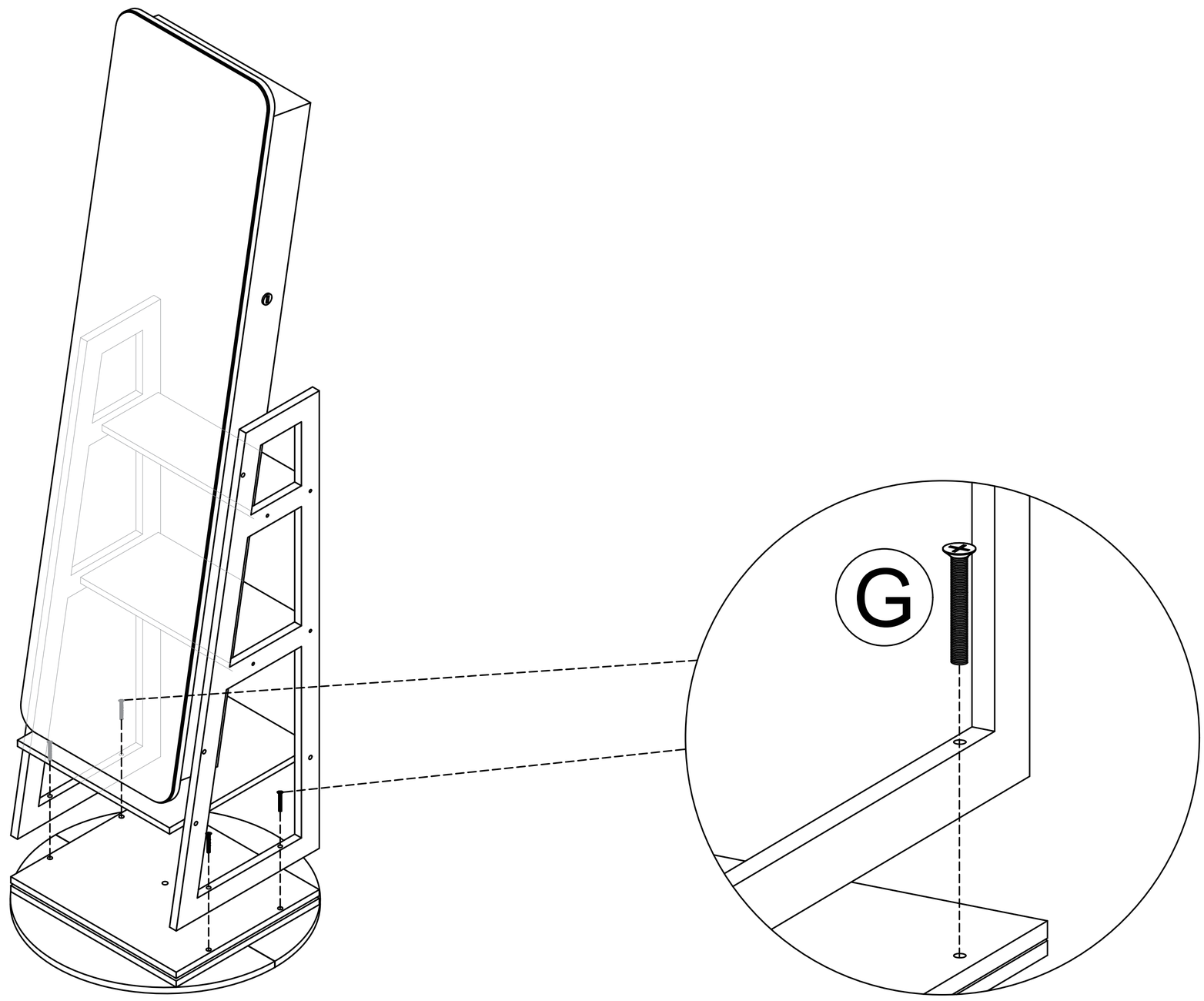

G	(6*50mm) x 4

It is recommended to have two people assist with the installation.

Step 6

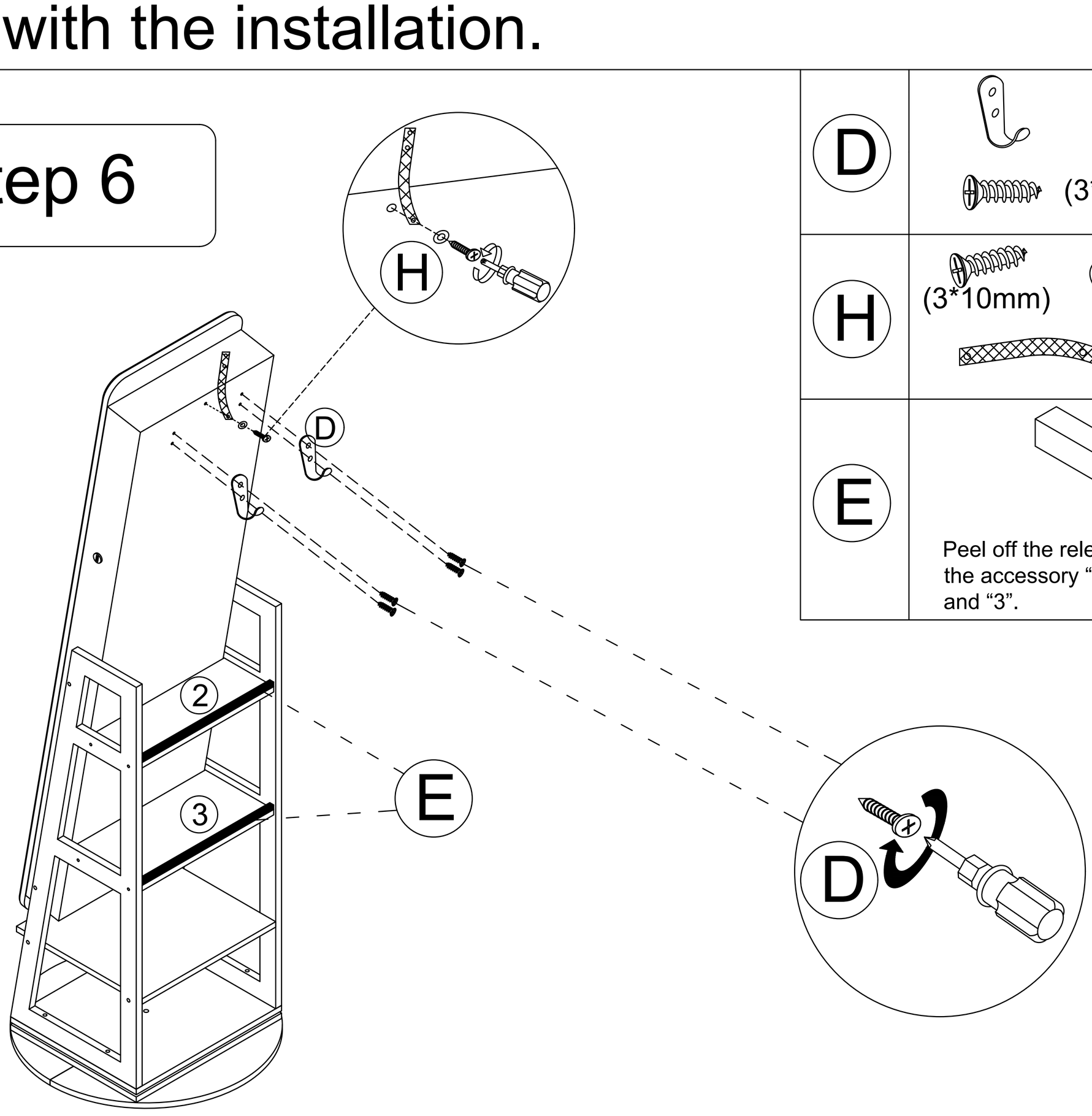

D	x 2 (3*10mm) x 4
H	(3*10mm) x 1
E	x2 Peel off the release paper and attach the accessory “E” to the boards “2” and “3”.

Step 7

Open the flannelette drawer and put the cardboard down

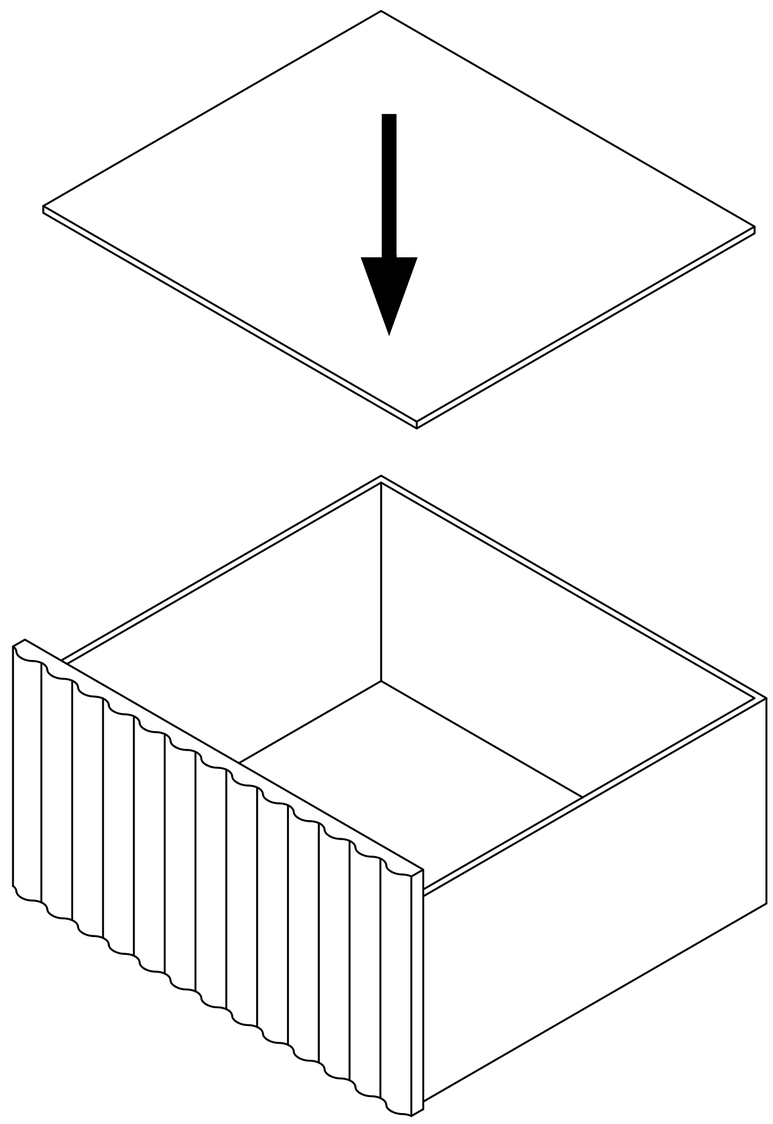

Step 8

I	x 1	x 2

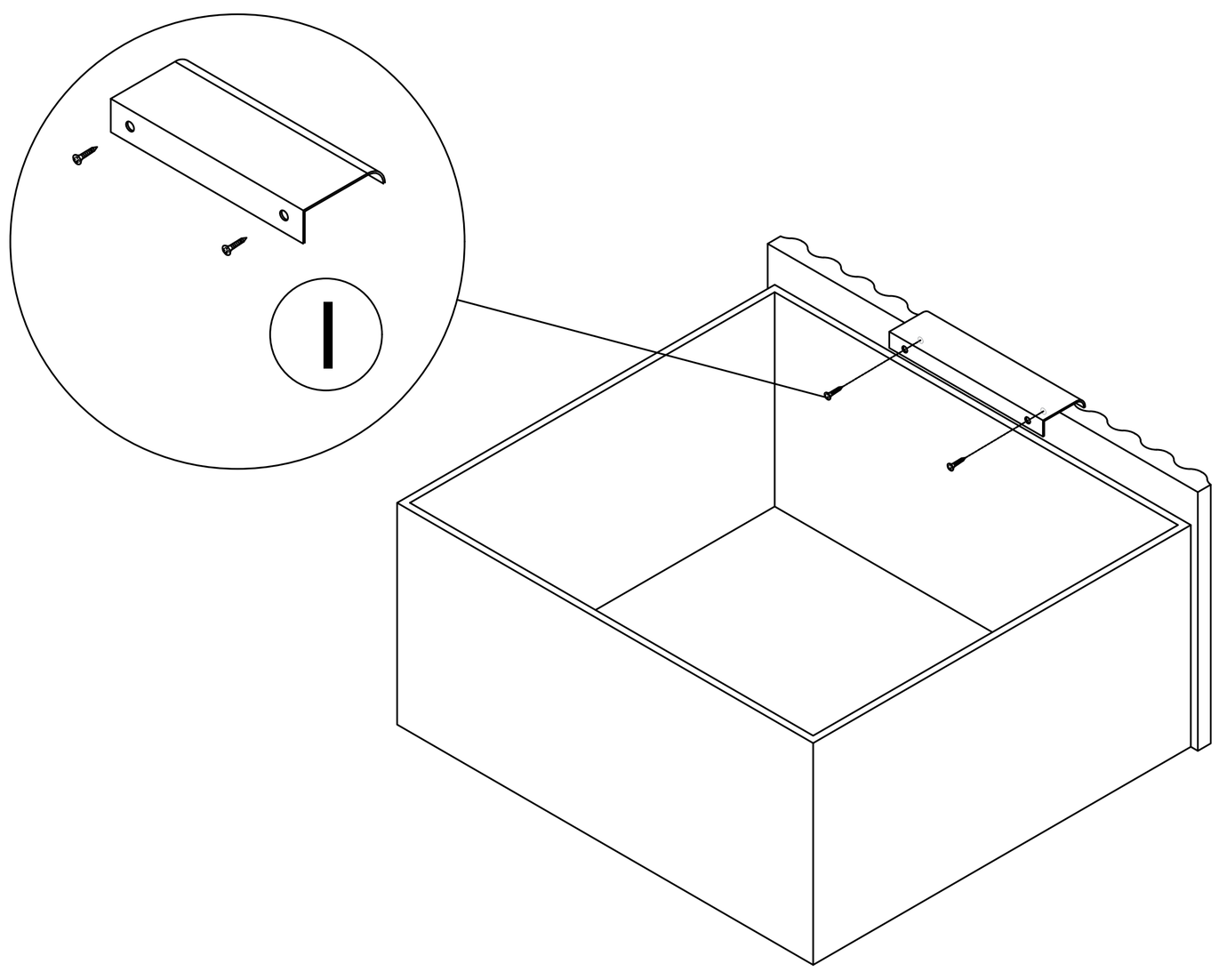

Step 9

B	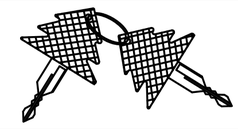	x 1

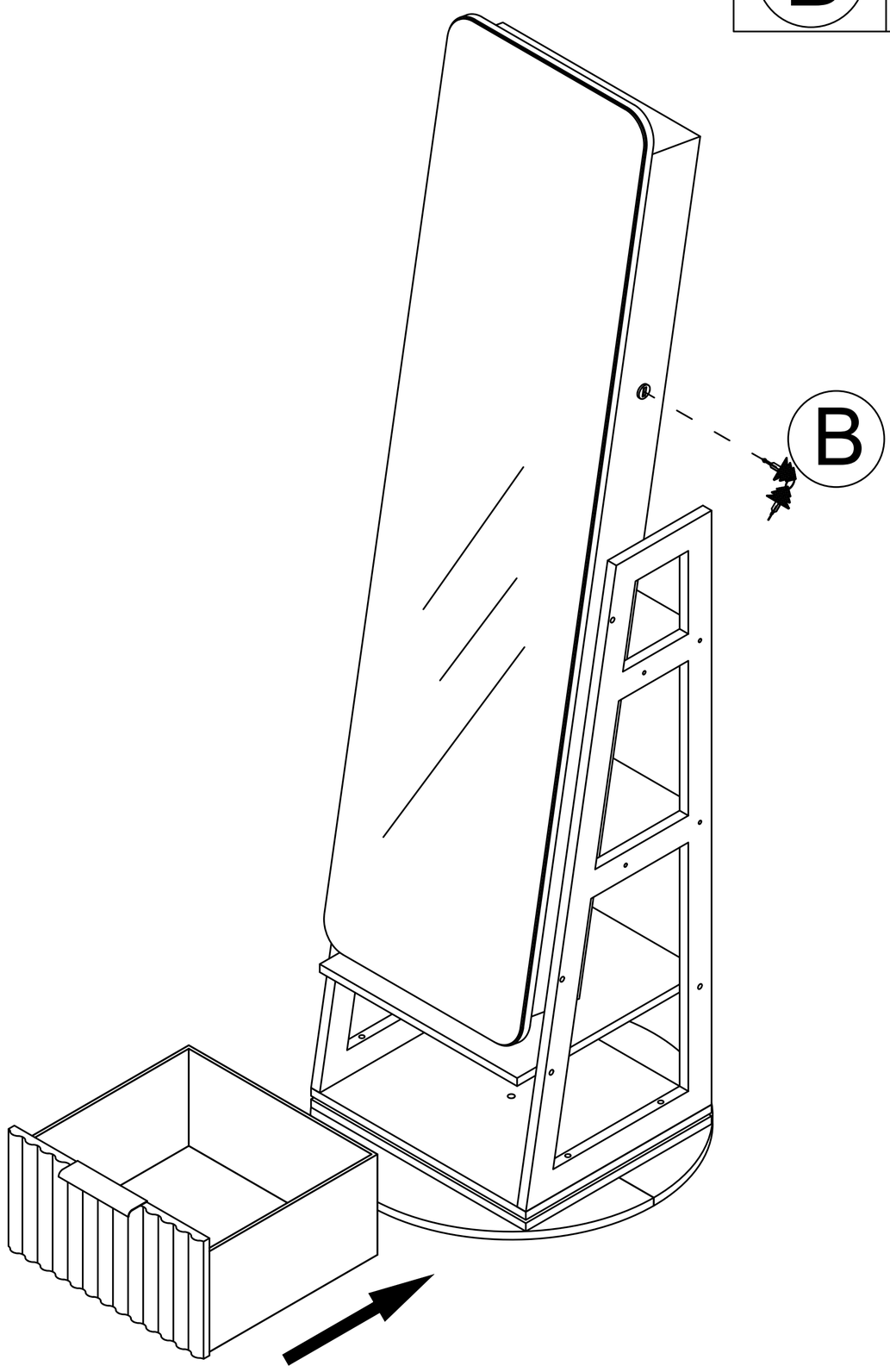

H	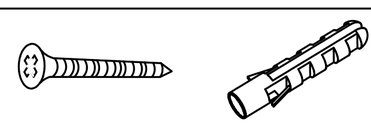	x 1
F	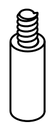	x 2

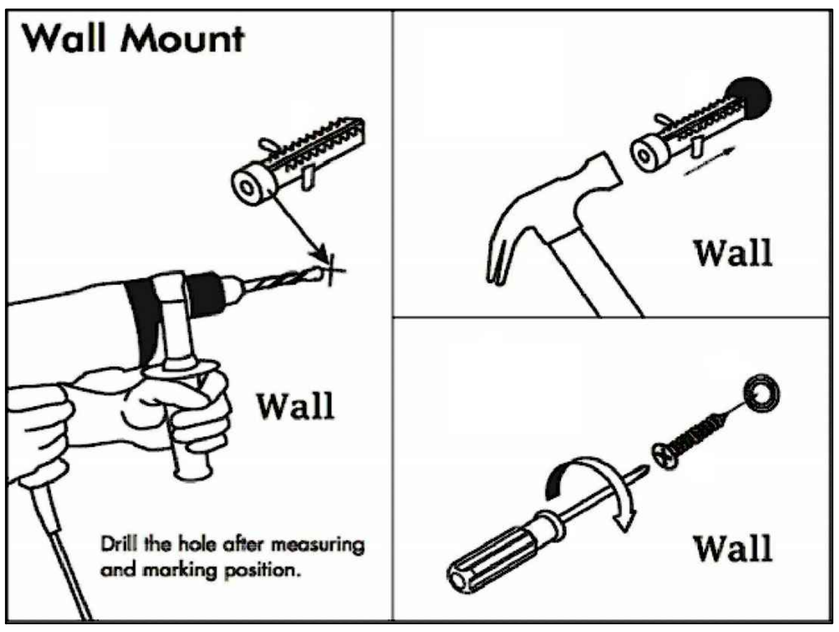

Battery installation

(Tip: use 3 AA Batteries)
need to bring your own