ASSEMBLY INSTRUCTIONS

FULL BUNKBED WITH TRUNDLE

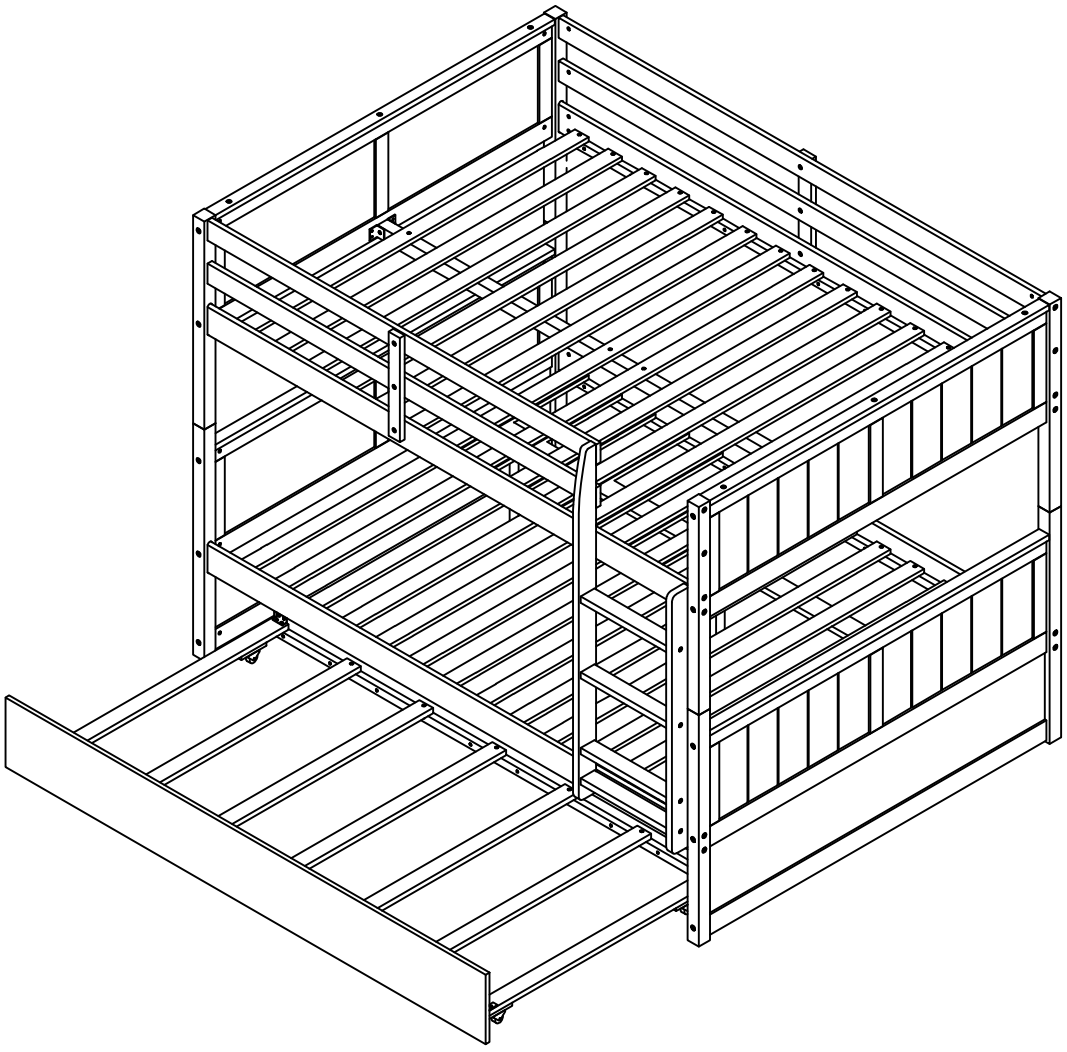

SAFETY WARNING

1. This bed is designed for use only mattress (es) meeting the following specifications on the upper bunk, and lower bunk:

Upper bunk (Bunk bed and tribed included)

Bed type	Length	Width	Thickness
Full Standard	74"-75"	54"	6" max

Lower bunk

Bed type	Length	Width	Thickness
Full Standard	74"-75"	54"	8"

2. Replacement parts, including additional guardrails, maybe obtained from any of our dealers.
3. Follow the information on the warnings appearing on the upper bunk bed end structure and on the carton. Do not remove warning label from bed.
4. Always use the recommended size mattresses or mattress supports, or both, to help prevent the likelihood of entrapment or falls.
5. Surface of mattress must be at least 5" (127mm) below the upper edge of guardrails.
6. Do not allow children under 6 years of age to use the upper bunk.
7. Periodically check and ensure that the guardrail, ladder, and other components are in their proper position, free from damage, and that all connectors are tight.
8. Do not allow horseplay on or under the bed and prohibit jumping on the bed.
9. Always use the ladder for entering and leaving the upper bunk.
10. Do not use substitute part. Contact the manufacture or dealer for replacement part.
11. Use of a night light may provide added safety precaution for a child using the upper bunk.
12. Always use guardrails on both long sides of the upper bunk. If the bunk bed will be placed next to the wall, the guardrail that runs the full length of the bed should be placed against the wall to prevent entrapment between the bed and wall.
13. The use of water or sleep flotation mattresses is prohibited.
14. STRANGULATION HAZARD - Never attach or hang items to any part of the bunk bed that are not designed for use with the bed; for example, but not limited to, hook, belts and jump ropes.
15. Keep these instruction for future reference.
16. Prohibit more than one person on upper bunk
17. We recommend assembling your bunk bed on the shipping carton to protect your floor or carpet.
18. Be certain all staples are out of the box before beginning assembly on the shipping carton.

Detail View

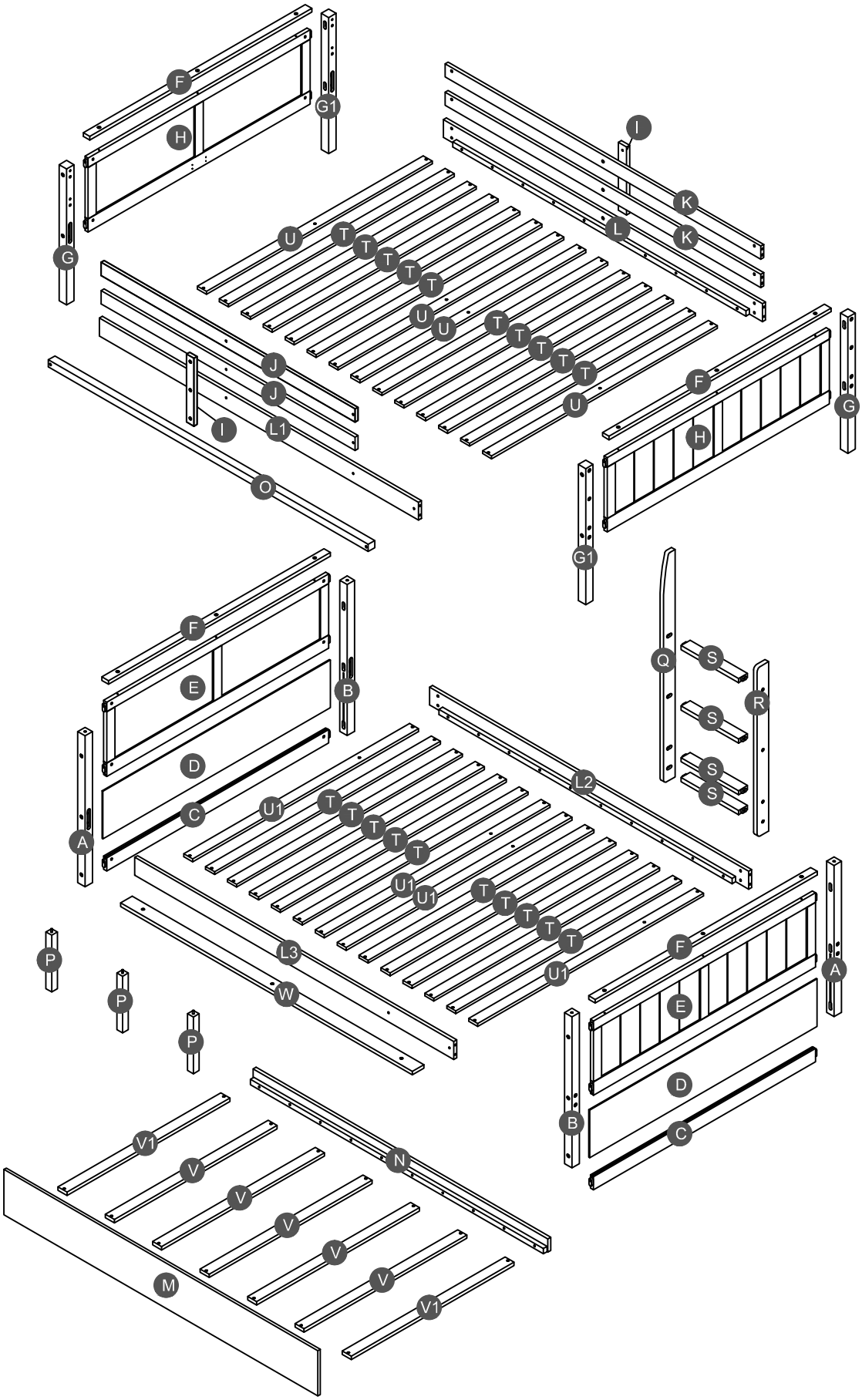
F
G1
H
I
K
L
K
U
T
T
T
T
T
G
U
U
T
T
T
T
T
U
J
J
I
L1
O
F
G
H
G1
F
E
B
D
C
A
Q
S
R
S
S
S
L2
U1
T
T
T
T
T
U1
U1
T
T
T
T
T
U1
P
P
P
L3
W
F
A
E
D
B
C
V1
V
V
V
V
V
V1
N
M

Part List

Hardware List

A 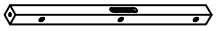 Lower leg Left Front /Right Back- 2pcs	**B**  Lower leg Left Back/Right Front - 2pcs	**F**  Cap for upper HB&FB - 2pcs
G  Upper leg Left Front /Right Back-2pcs	**G1**  Upper leg Left Back/Right Front - 2pcs	**I**  Vertical guard rail - 2pcs
J  Upper Guard rail (front) - 2pcs	**K** 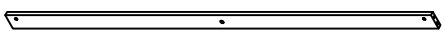 Upper Guard rail (back) - 2pcs	**L**  Upper side rail (back)- 1pc
L1 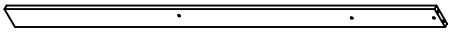 Upper side rail (front)- 1pc	**L2**  Lower side rail (back)- 1pc	**L3** 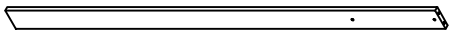 Lower side rail (front)- 1pc
M 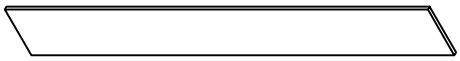 Front panel side rail of trundle - 1pc	**N**  Back panel side rail of trundle - 1pc	**O** 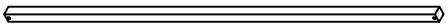 Slat support - 1pc
P 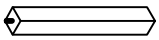 Leg support - 3pcs	**W** 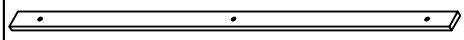 Lower support slat - 1pc	**S** 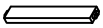 Step ladder - 1pc
V  Trundle Slats - 5pcs	**V1**  Trundle Slats - 2pcs	

C 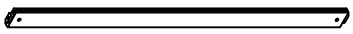 Horizontal bar - 2pcs	**D** 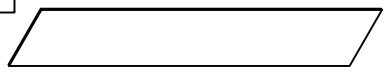 Lower Side panel - 2pcs	**E** 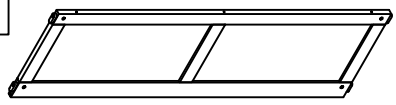 Lower HB&FB - (2pcs)
F Cap for lower HB&FB - 2pcs	**H** 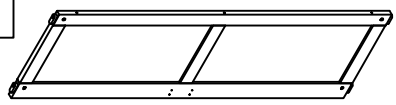 Upper HB&FB - (2pcs)	**Q** 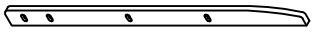 Left side ladder - 1pc
R 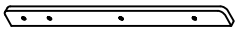 Right side ladder - 1pc	**S** Step ladder - 3pcs	**T** 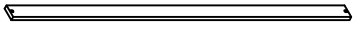 Slats - 20pcs
U1  Lower slats - 4pcs	**U**  Upper slats - 4pcs	

Hardware List

1 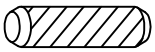 Ø10*40mm	**2** 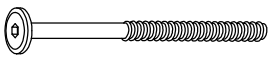 (Ø15)1/4"*100mm	**3** 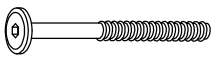 (Ø15)1/4"*80mm
Wood dowel (6pcs)	Hex-Head bolts (22pcs)	Hex-Head bolts (20pcs)
4 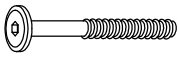 (Ø12)1/4"*60mm	**5**  (Ø12)1/4"*40mm	**6** 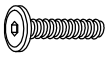 (Ø12)1/4"*30mm
Hex-Head bolts (8pcs)	Hex-Head bolts (8pcs)	Hex-Head bolts (6pcs)
7  (Ø12)1/4"*40mm	**8**  1/4"*15 (9.5mm)	**9** 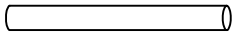 Ø9*90mm
Hex-Head bolts (12pcs)	Horizontal-Hole bolts(50pcs)	Connecting bar (4pcs)
10  (Ø13)1/4" x 9/16"	**11** 116*40*27mm 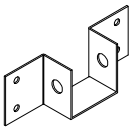	**12**  Ø3.5*15mm
Hex Cap (2pcs)	Hooks (2pcs)	Wood screws (8pcs)
13 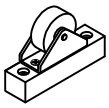 100*63*20mm	**14**  Ø4*30mm	**15**  (1/4")4.5*58mm
Wheels (4pcs)	Wood screws (86pcs)	Allen key (2pcs)
16  95*95*18*3mm	**17**  Ø3.5*15mm	**18**  40*18*18*2mm
Metal bracket (2pcs)	Wood screws (16pcs)	Metal bracket (2pcs)

ASSEMBLY TOOLS REQUIRED (NOT INCLUDED)

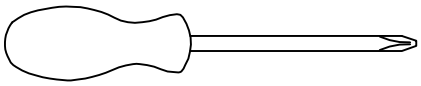 (Phillip head screwdriver)



DO NOT USE POWER TOOLS TO ASSEMBLE THIS PRODUCT !

STEP 1:

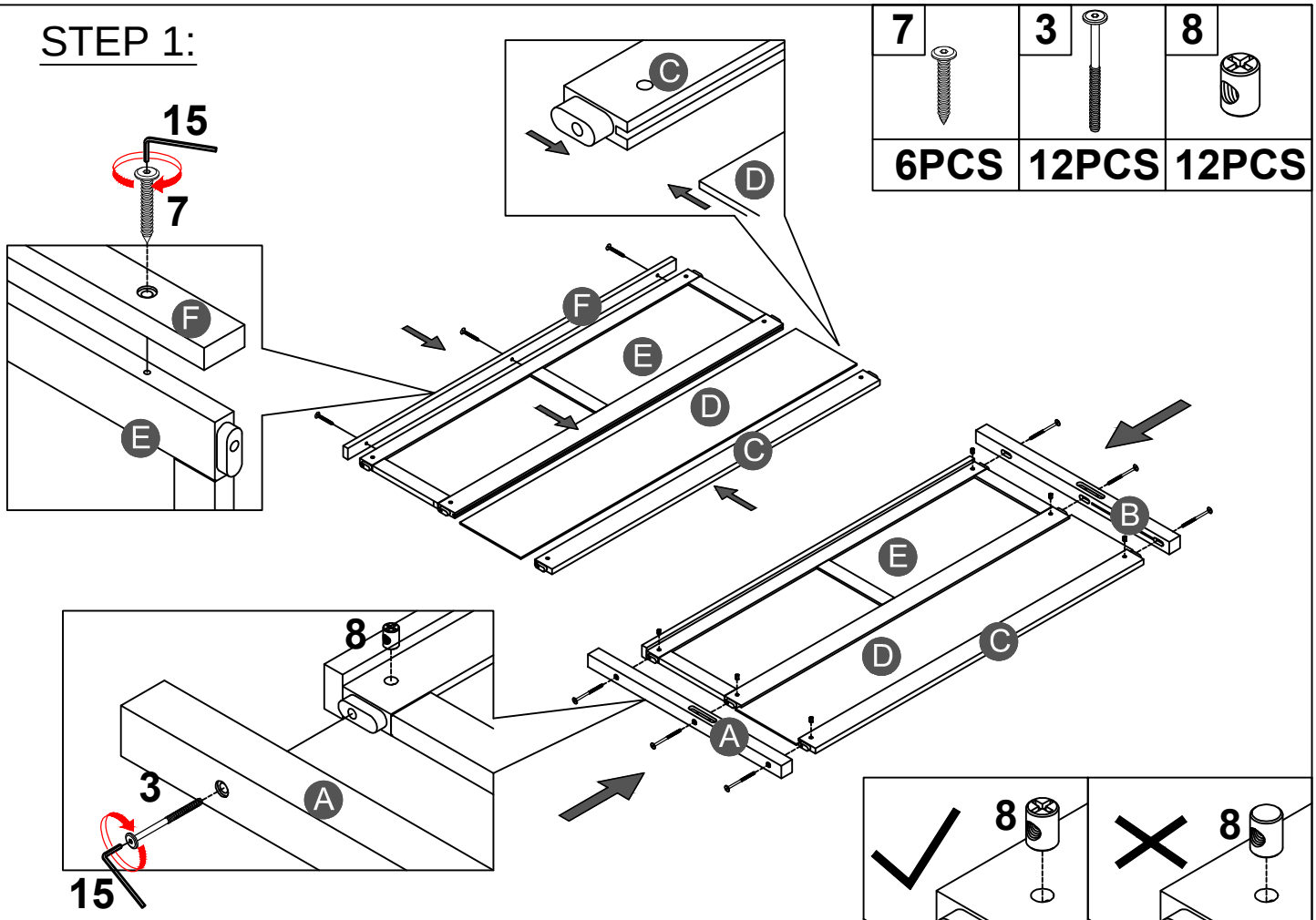

Note:Part 8 will face up with the "x" mark on it, otherwise it cannot be tightened

STEP 2:

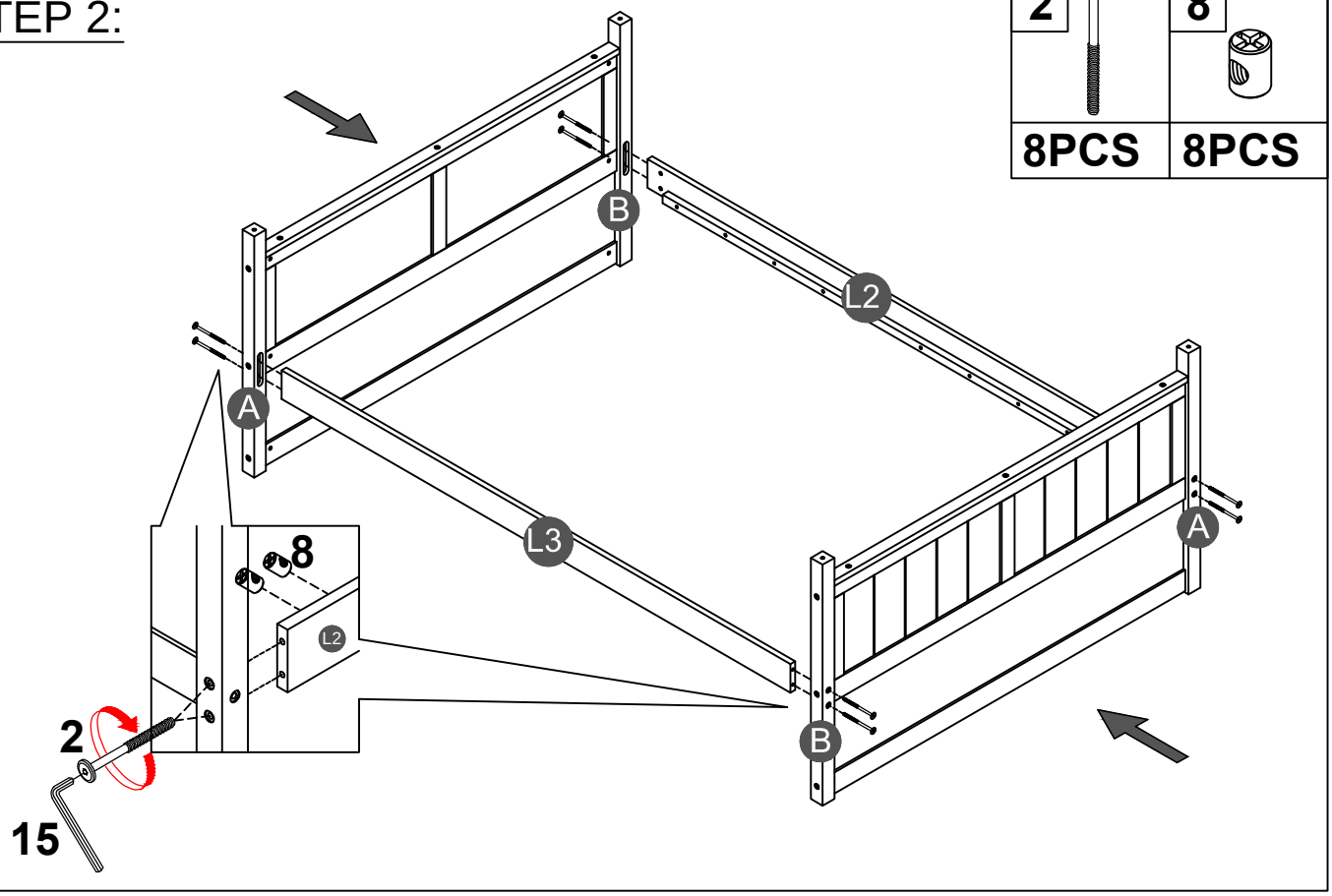

STEP 3:

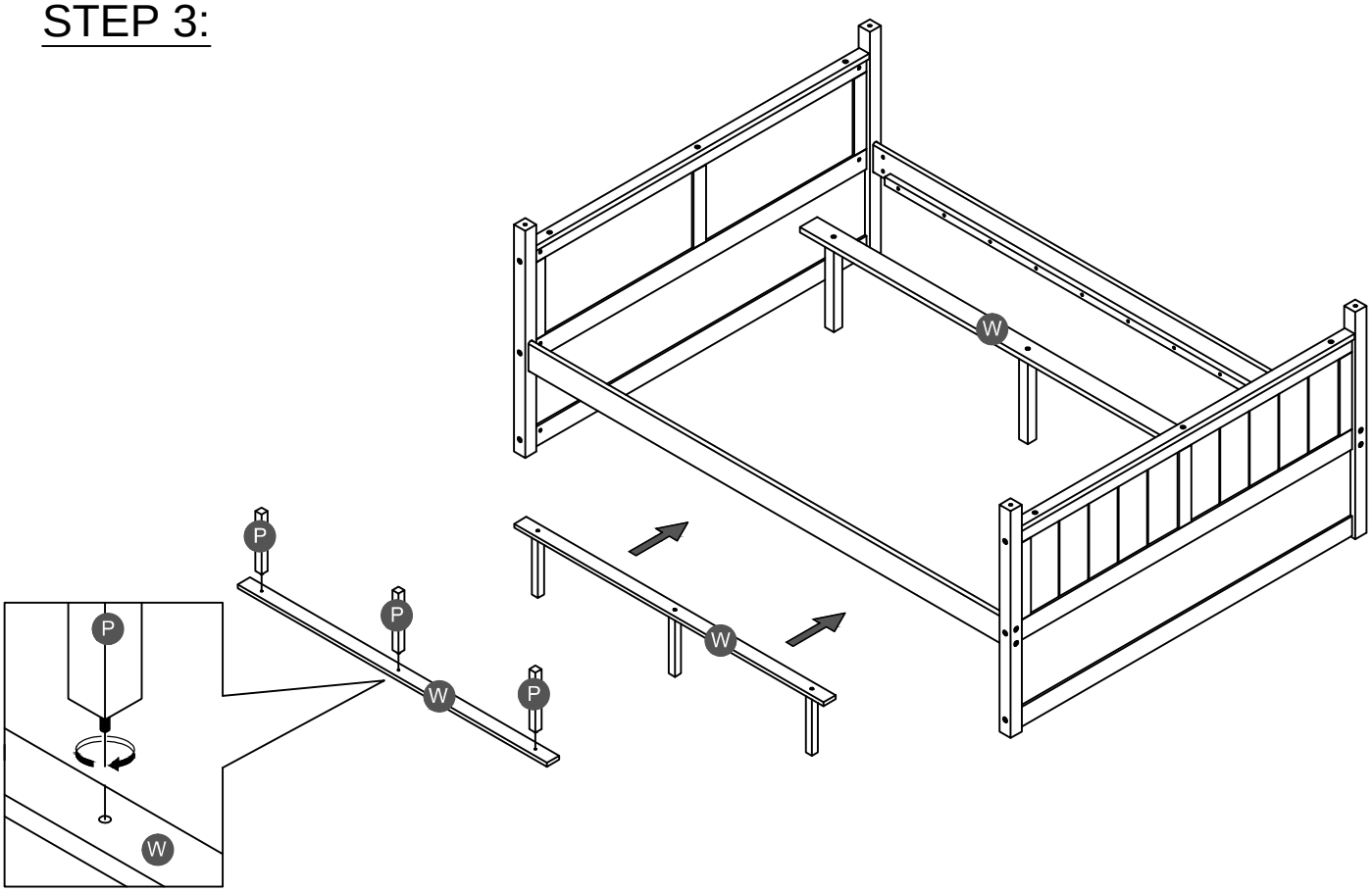

Assembling leg support (P) with lower support slat (W) later rotate, Move support slat inside Full bunkbed.

STEP 4:

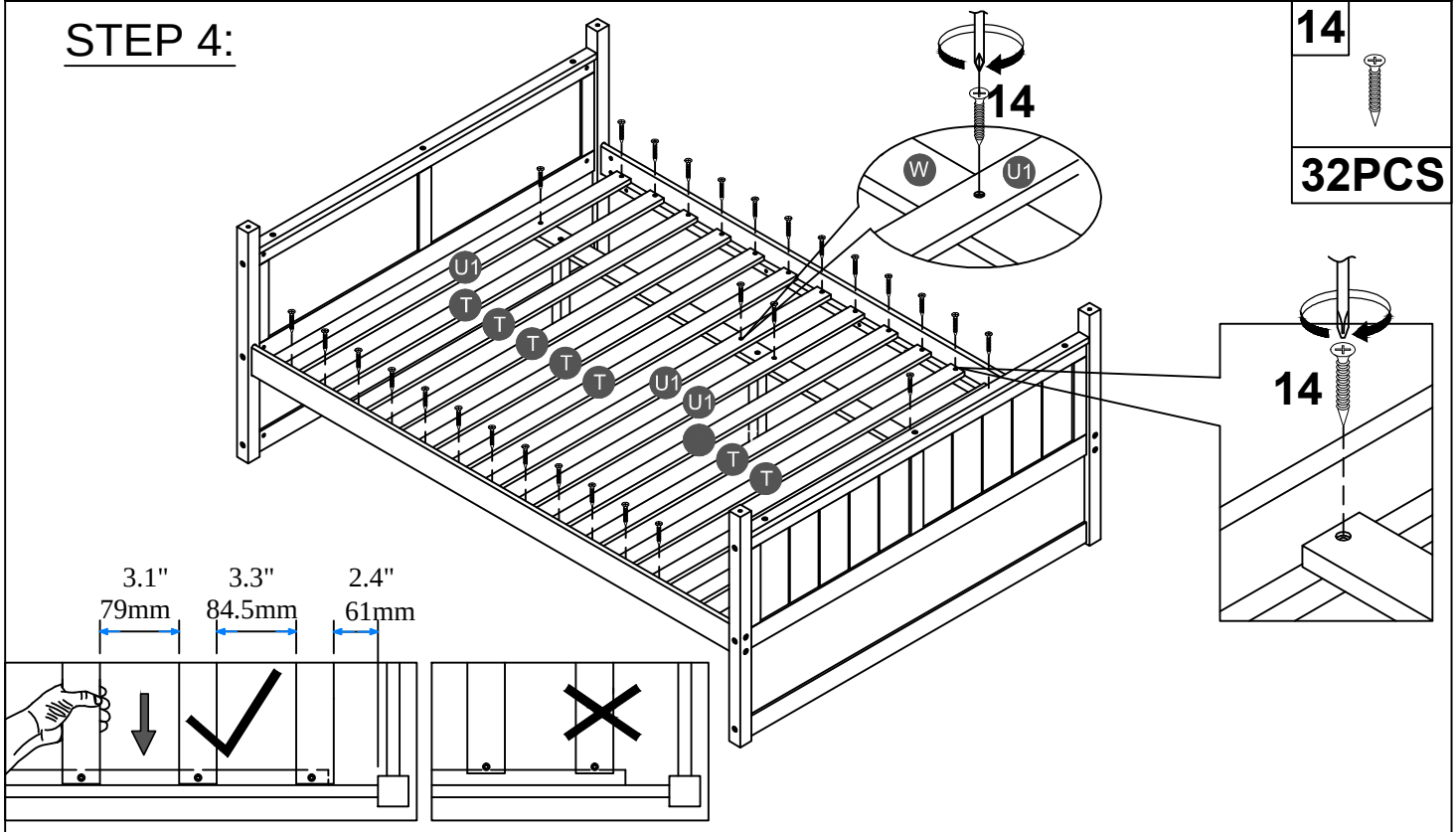

Note: Do not lock the screws of the bed slats to the outermost edge of the bed slats, you need to leave a certain space at the edges, otherwise it will cause the board to break. Do not lock the bed slats on the edge of the wood, please hold firmly before screwing , hold it in place with one hand, then lock the screw.

STEP 5:

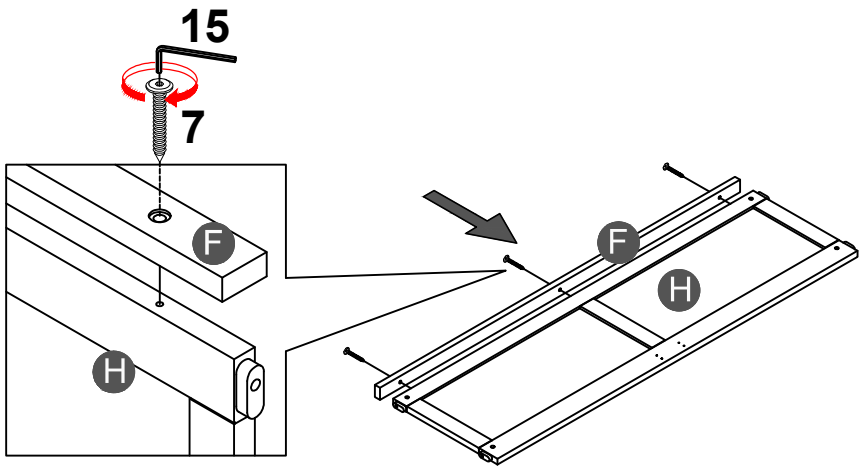

7
6PCS

x 2

STEP 6:

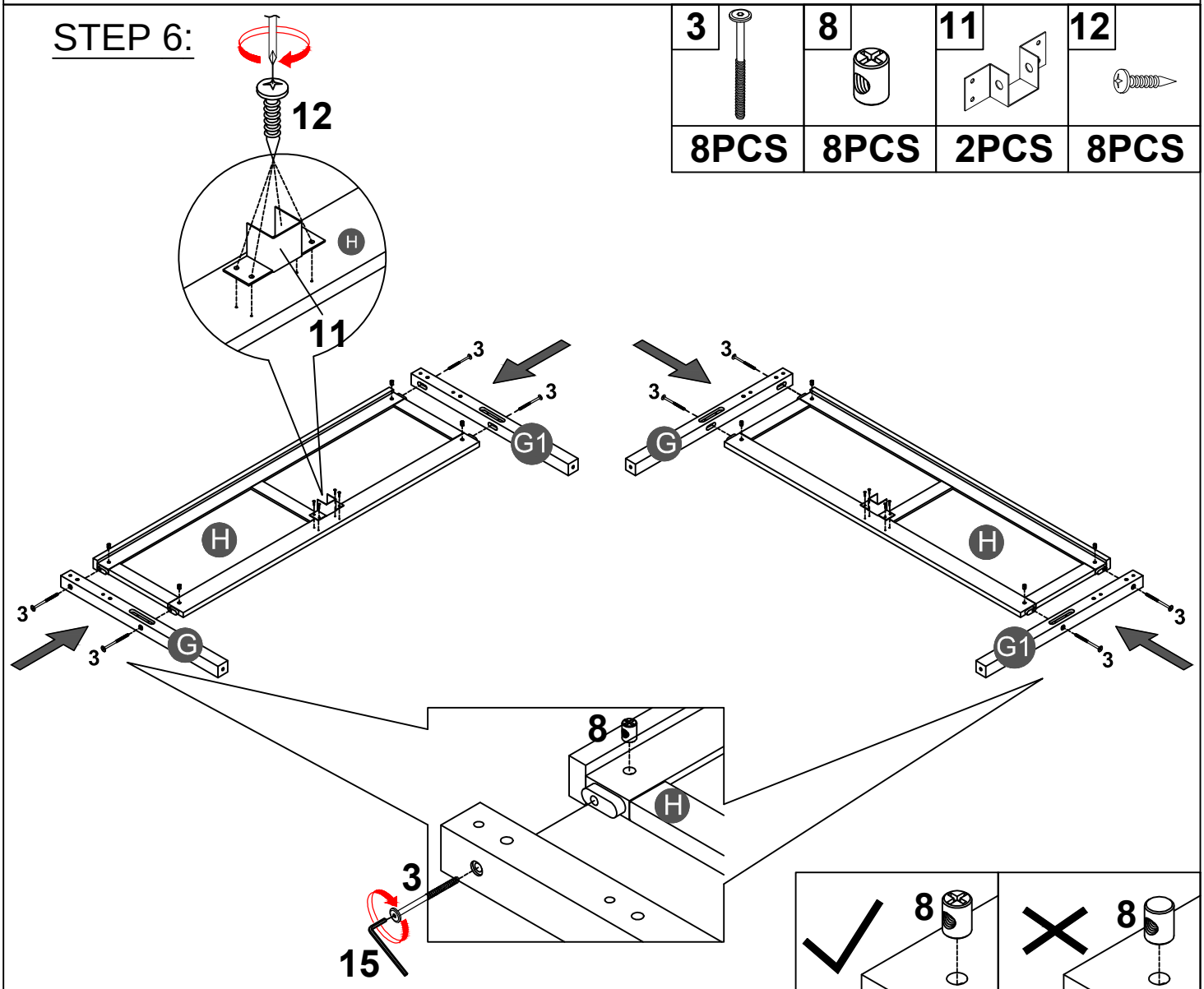

3	8	11	12
8PCS	8PCS	2PCS	8PCS

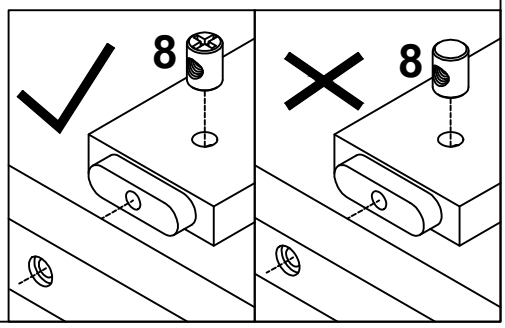

Note:Part 8 will face up with the "x" mark on it, otherwise it cannot be tightened

STEP 7:

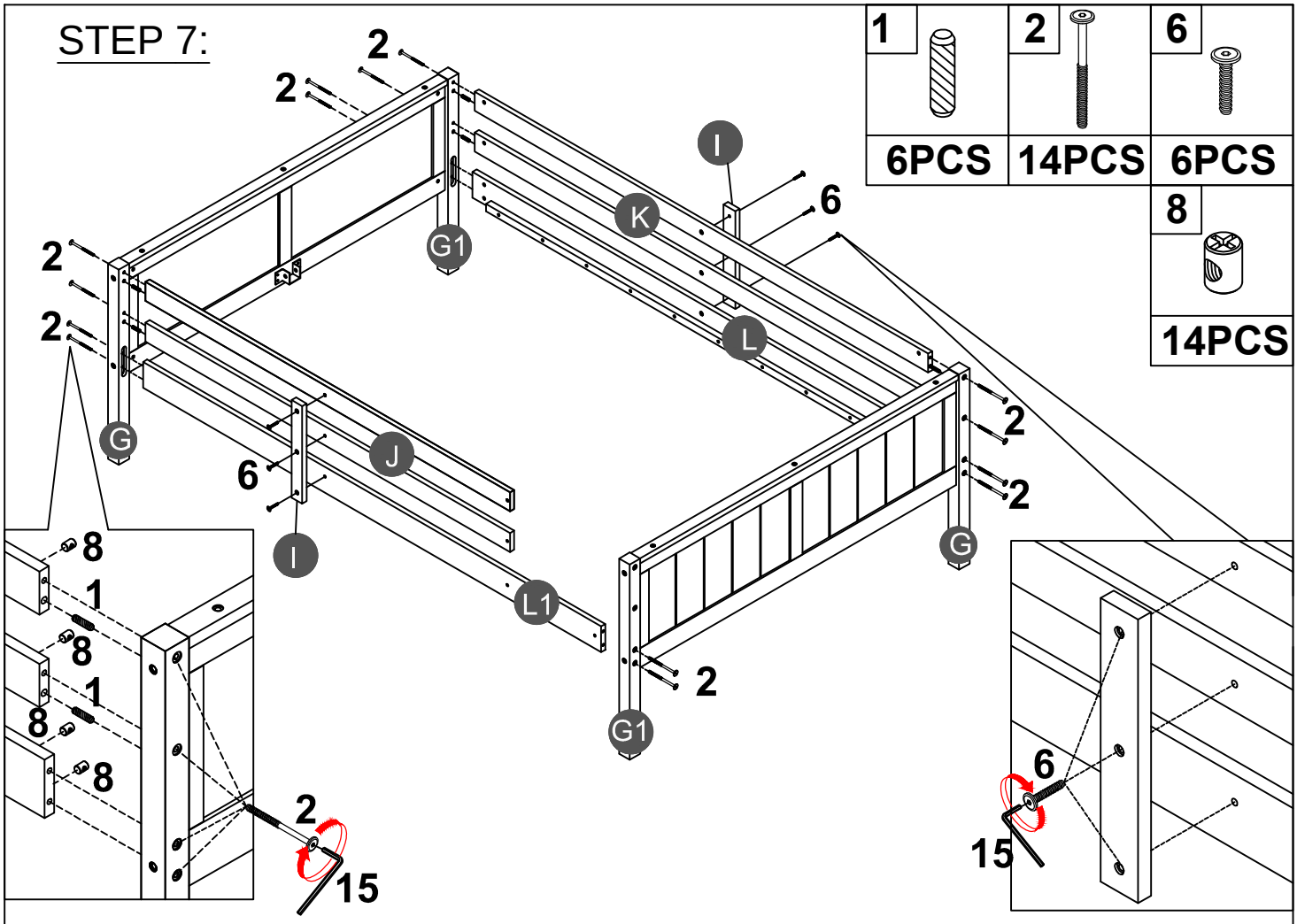
1
6PCS
2
14PCS
6
6PCS
8
14PCS
2
2
2
I
6
K
G1
L
2
2
G
J
6
I
L1
2
G1
8
1
8
1
8
8
2
15
6
15

STEP 8:

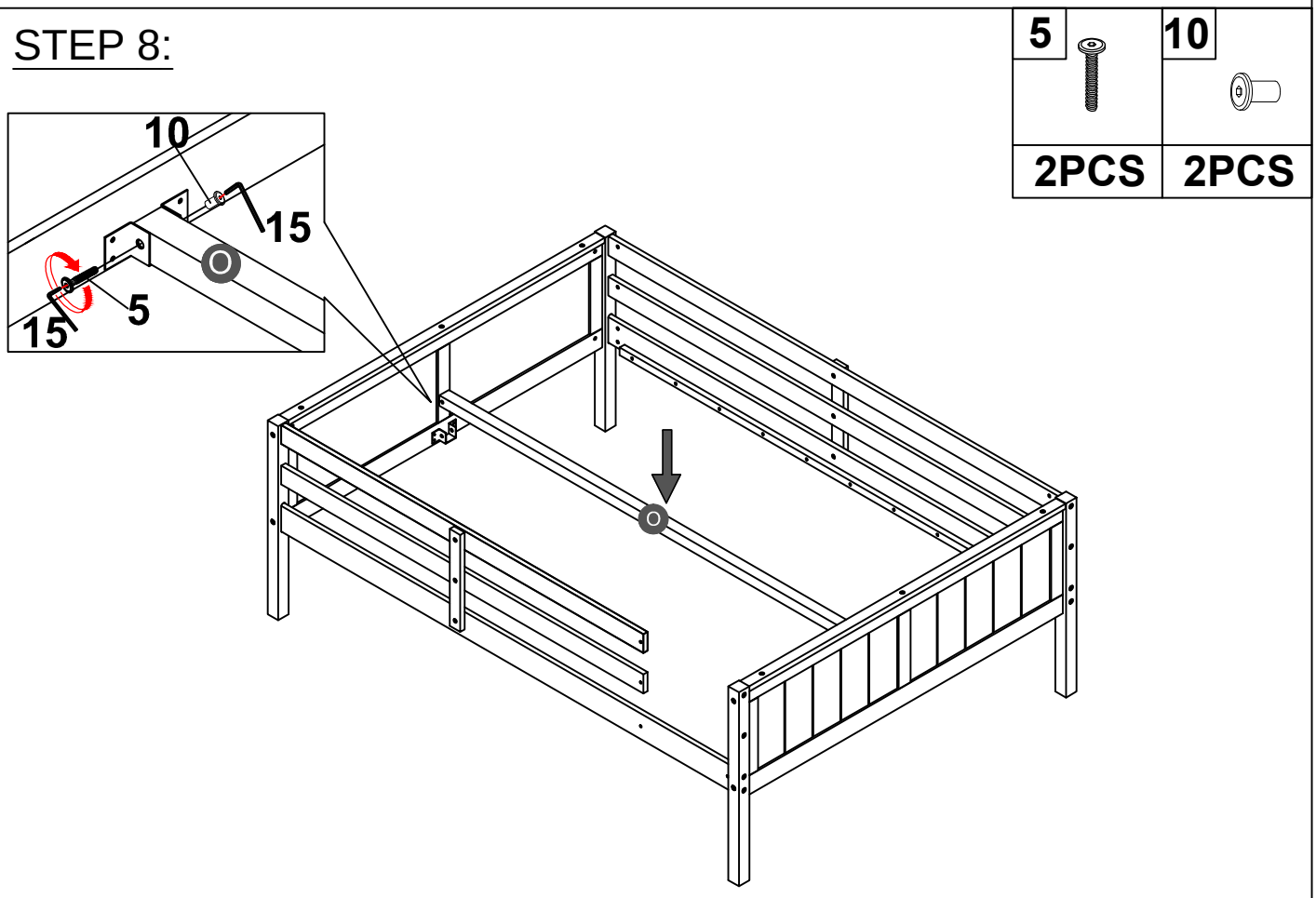
5
2PCS
10
2PCS
10
15
O
15
5
O

STEP 9:

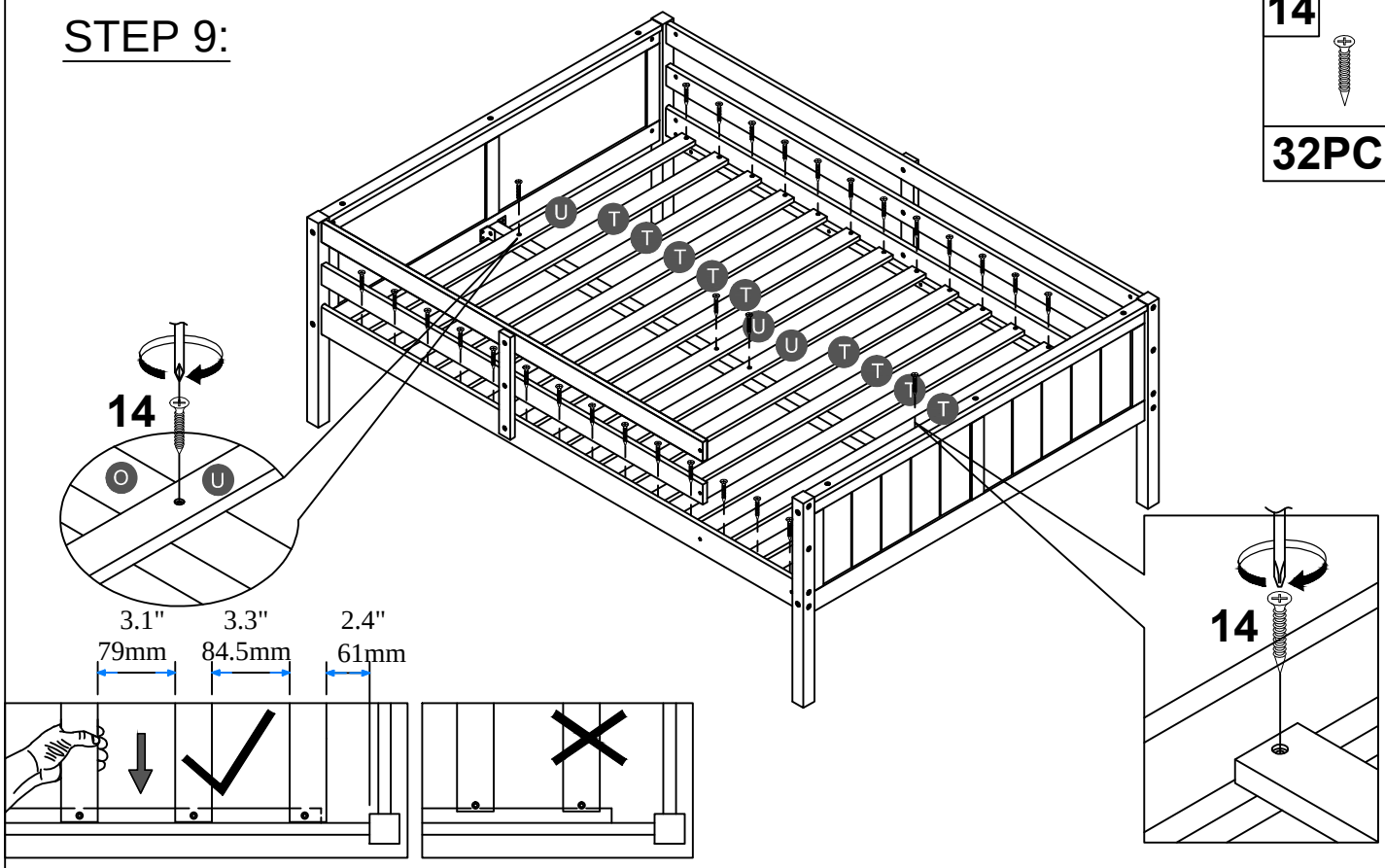

Note: Do not lock the screws of the bed slats to the outermost edge of the bed slats, you need to leave a certain space at the edges, otherwise it will cause the board to break.
Do not lock the bed slats on the edge of the wood, please hold firmly before screwing , hold it in place with one hand, then lock the screw.

STEP 10:

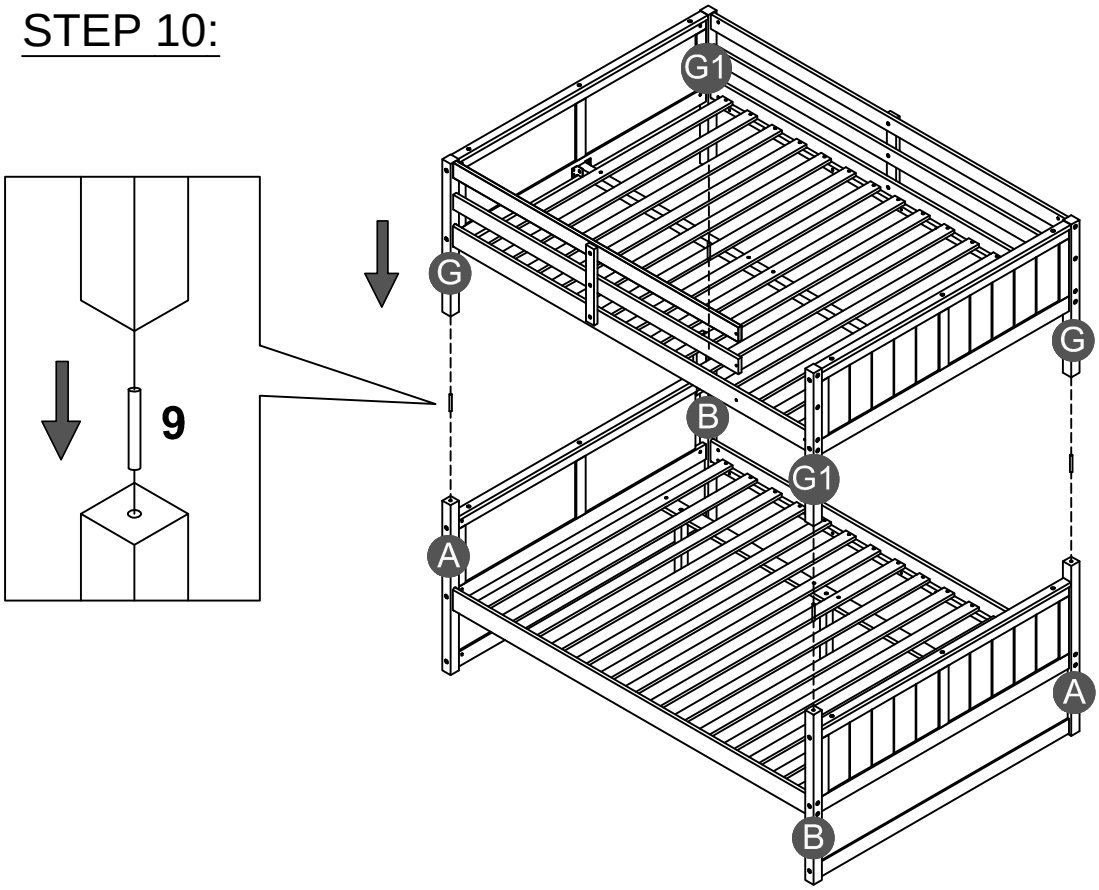

STEP 11:

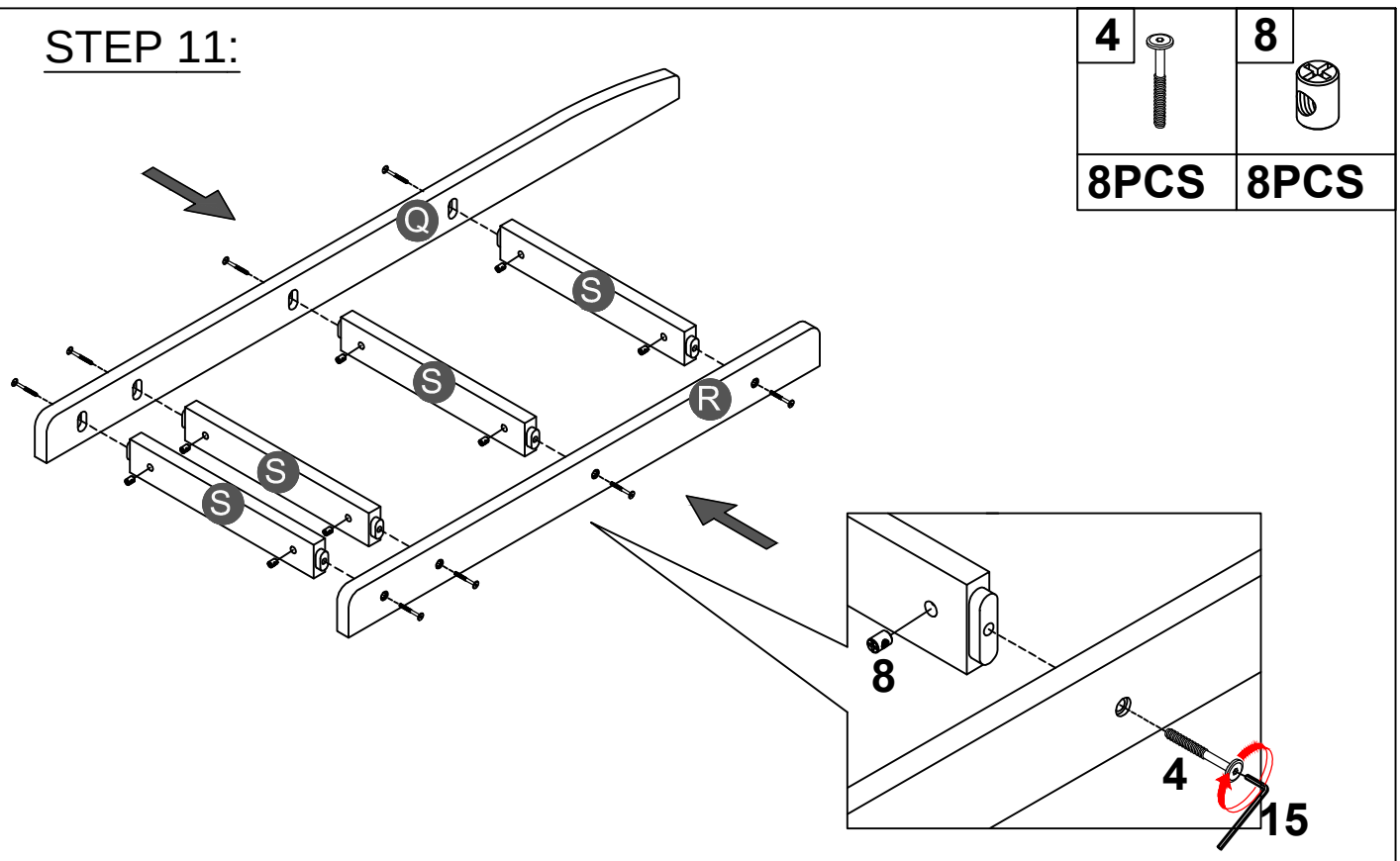

STEP 12:

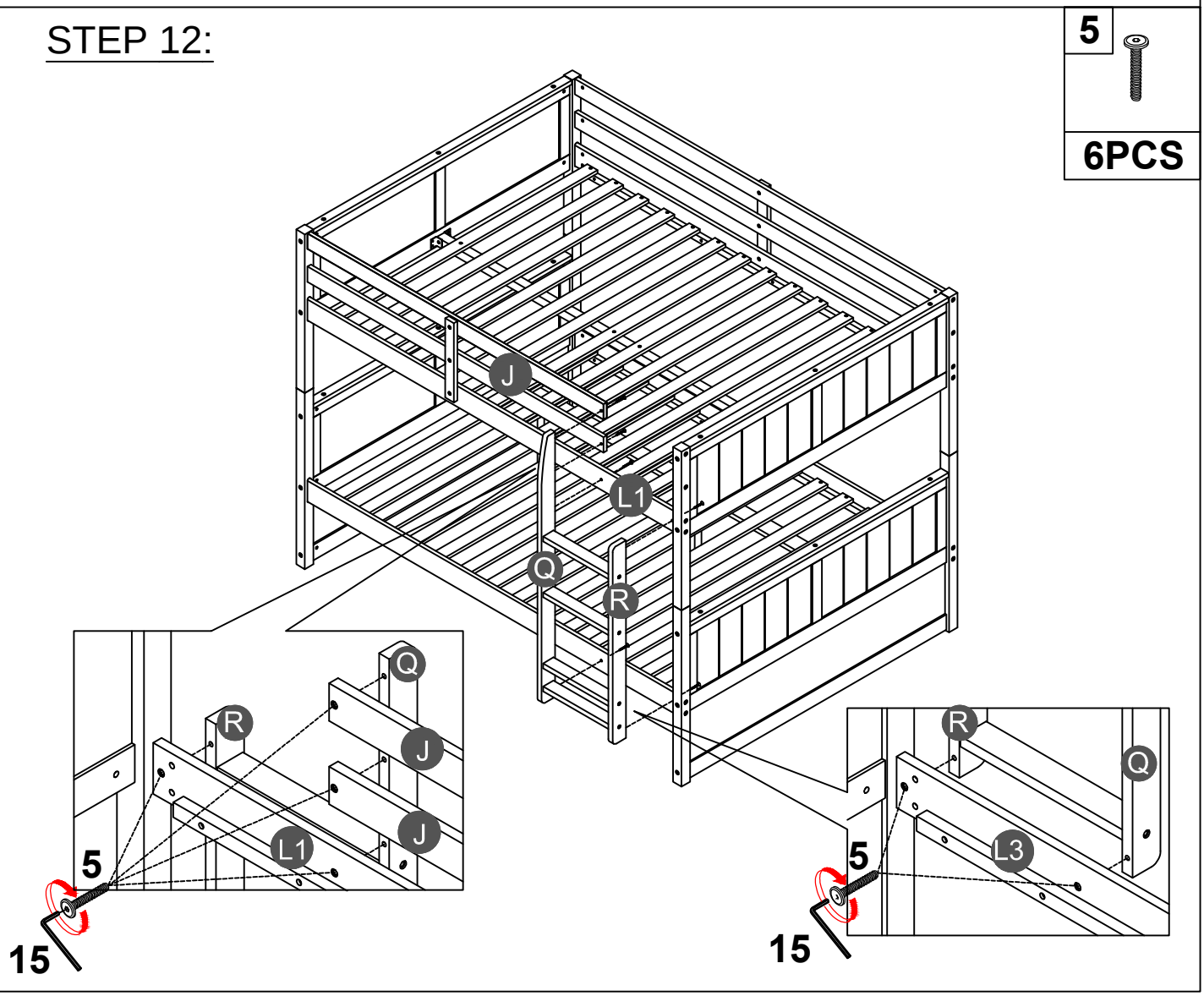

STEP 13:

13	14
4PCS	8PCS

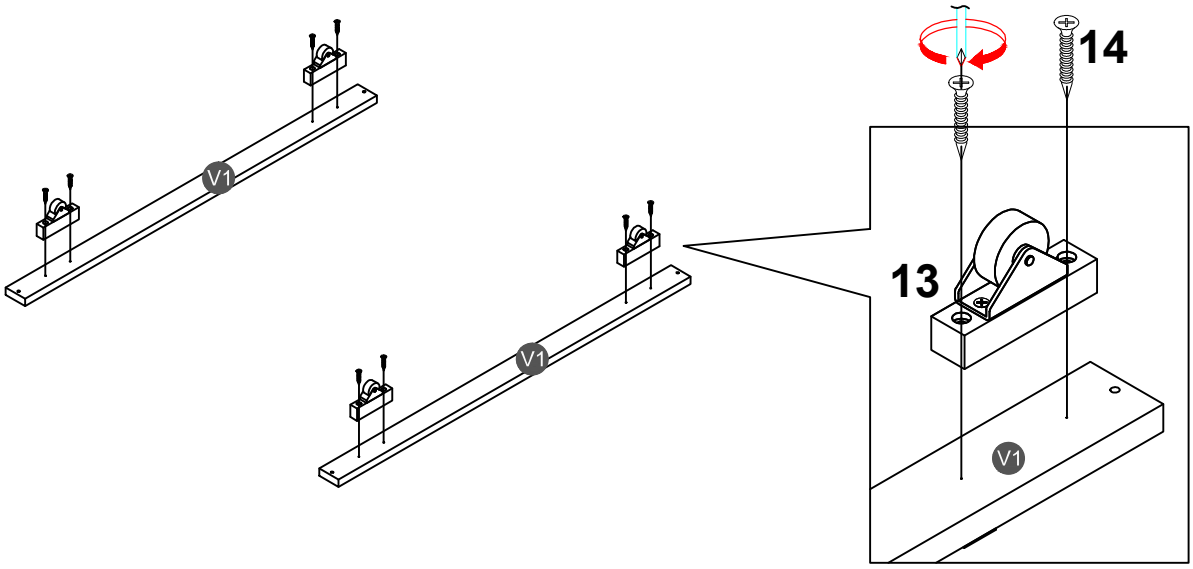

STEP 14:

14
14PCS

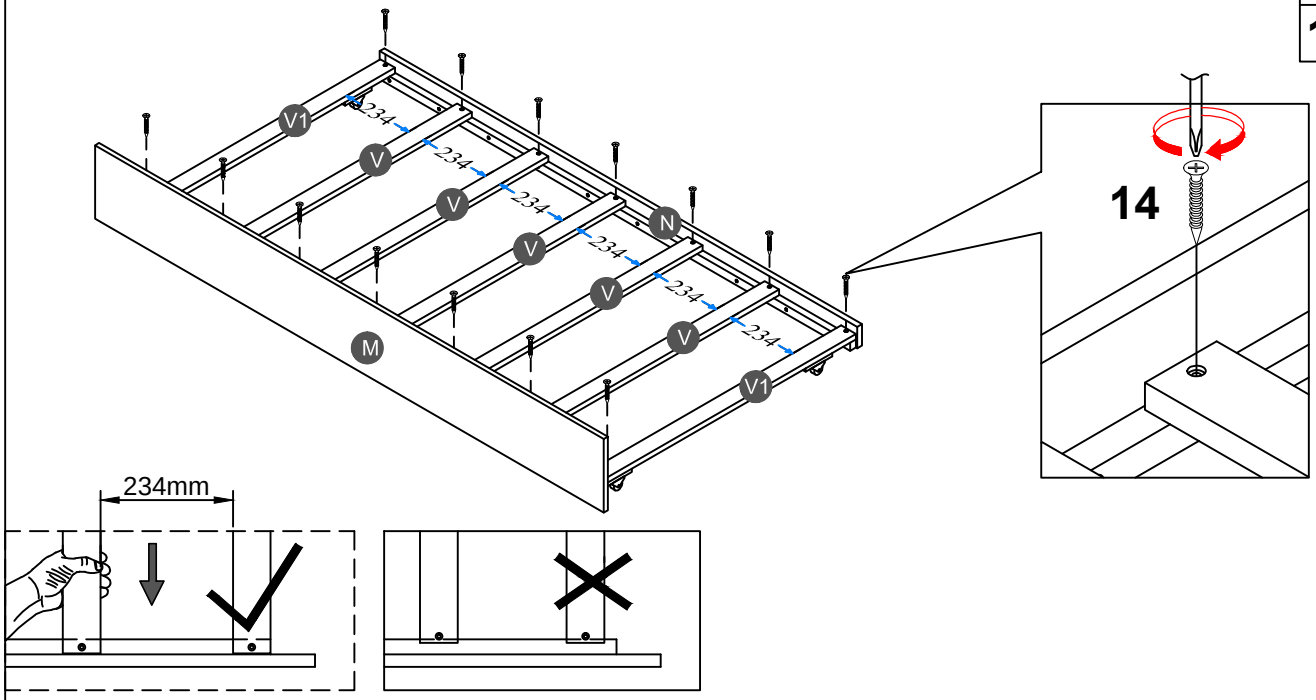

Note: Do not lock the screws of the bed slats to the outermost edge of the bed slats, you need to leave a certain space at the edges, otherwise it will cause the board to break.
Do not lock the bed slats on the edge of the wood, please hold firmly before screwing , hold it in place with one hand, then lock the screw.

STEP 15:

16	17
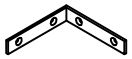	
2PCS	8PCS

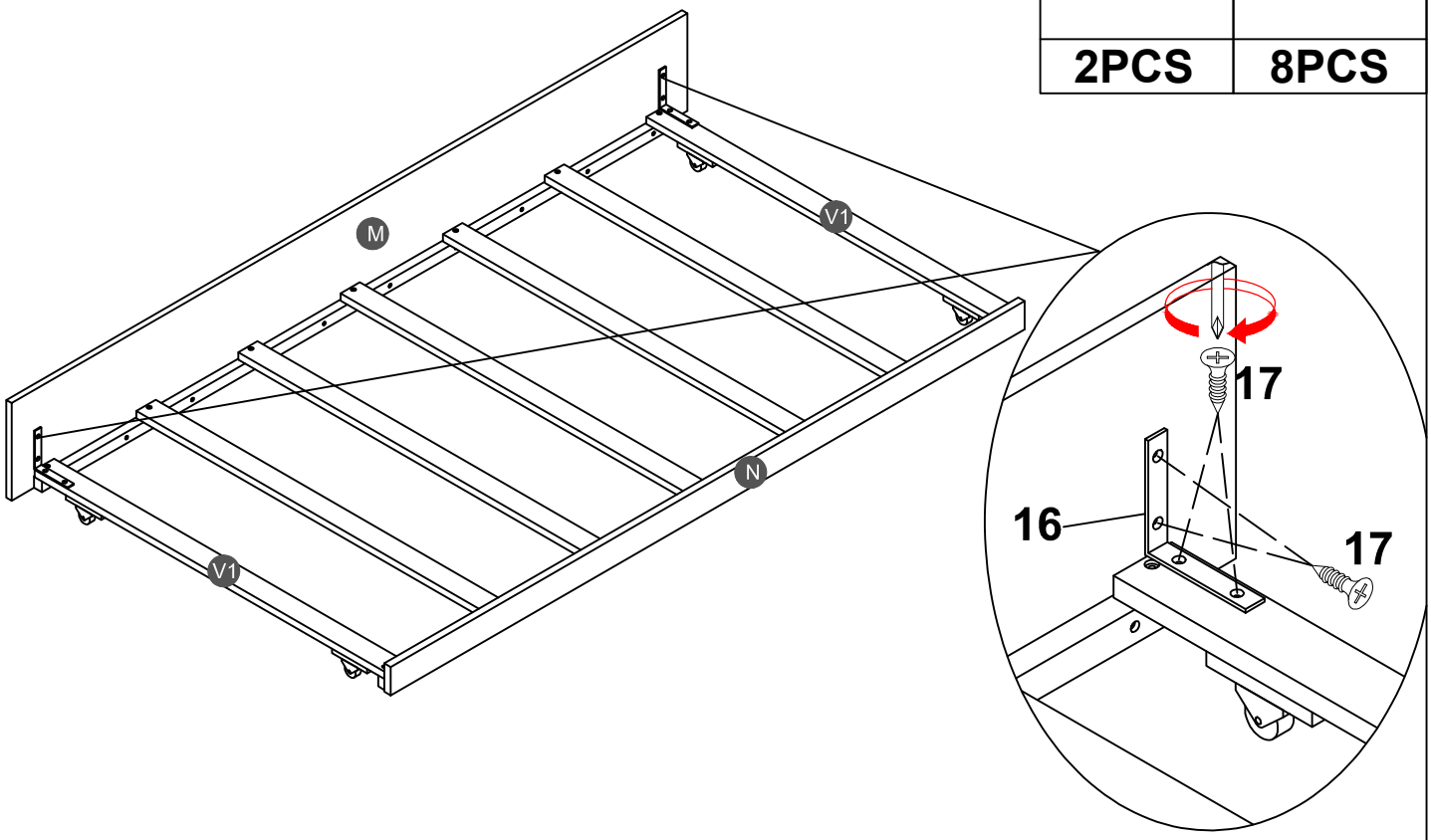

STEP 16:

17	18
	
8PCS	2PCS

STEP 17:

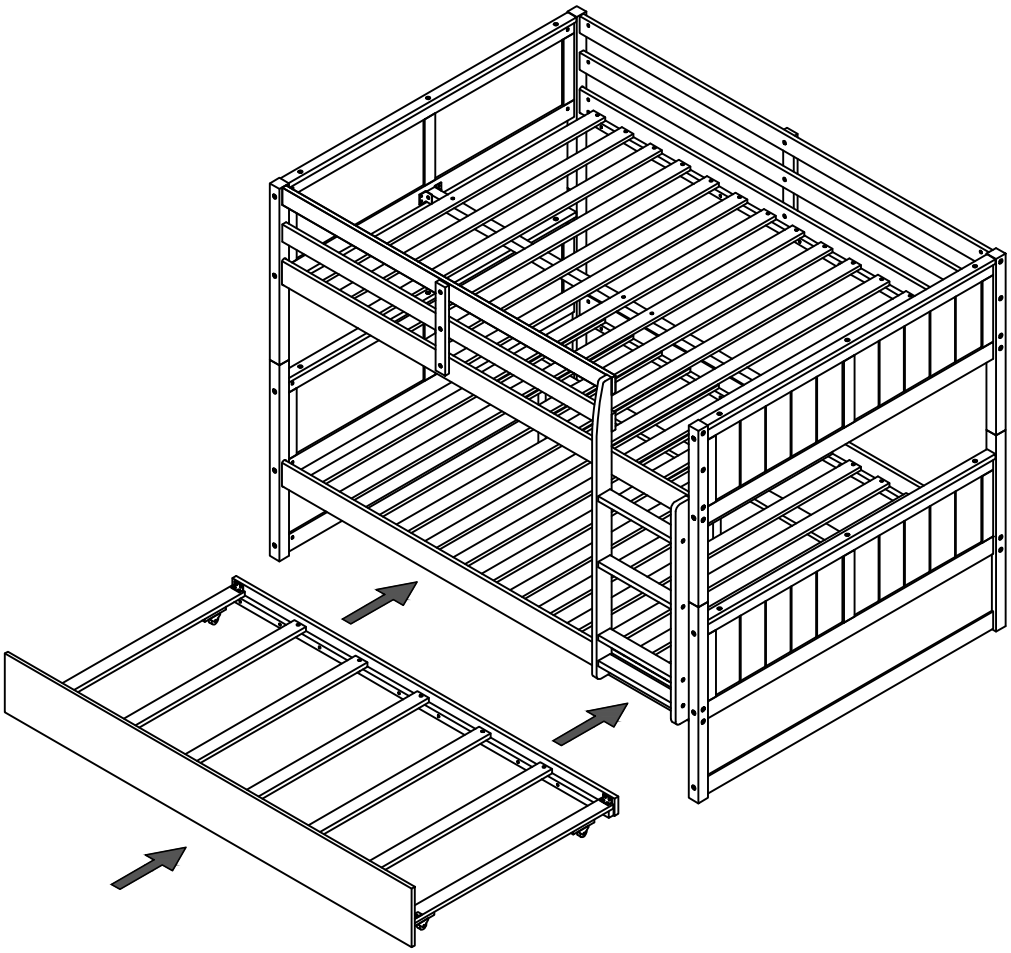

Push Trundle under the bottom of Bunkbed.

