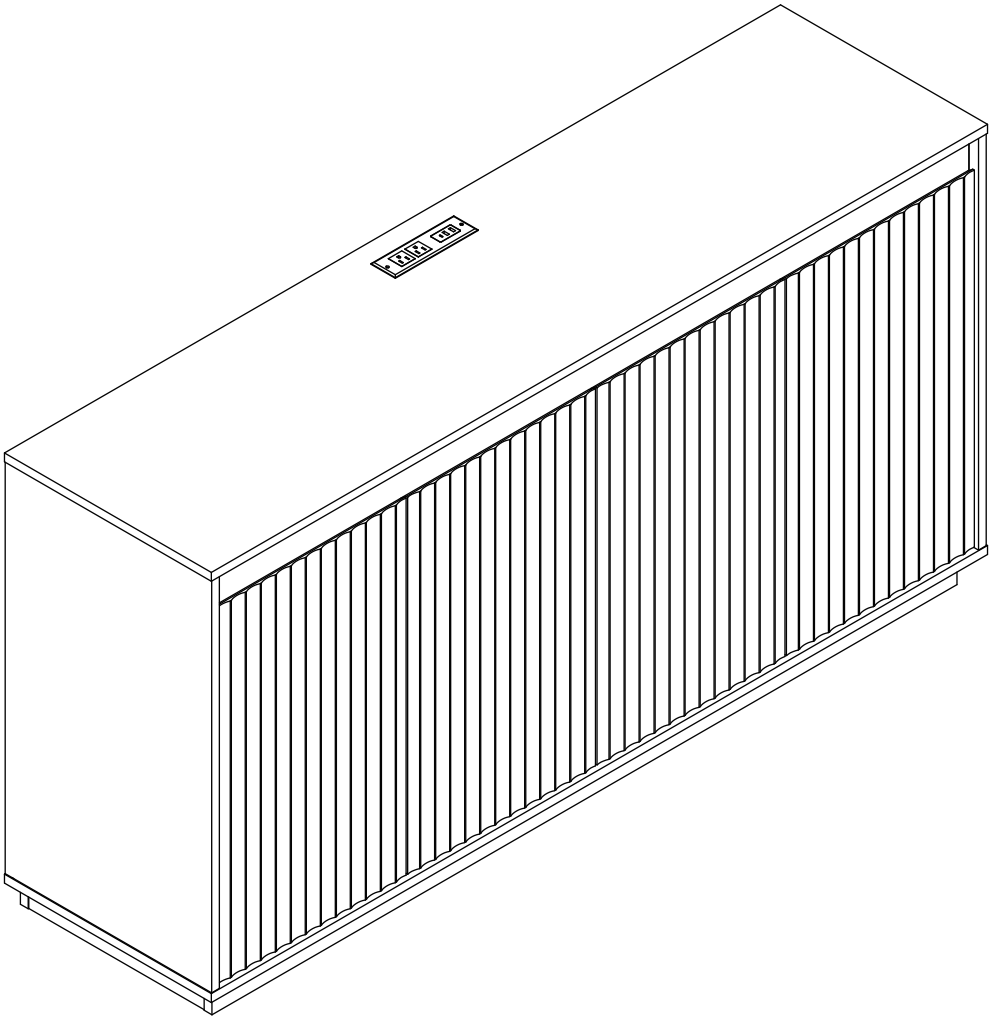

Exploded View

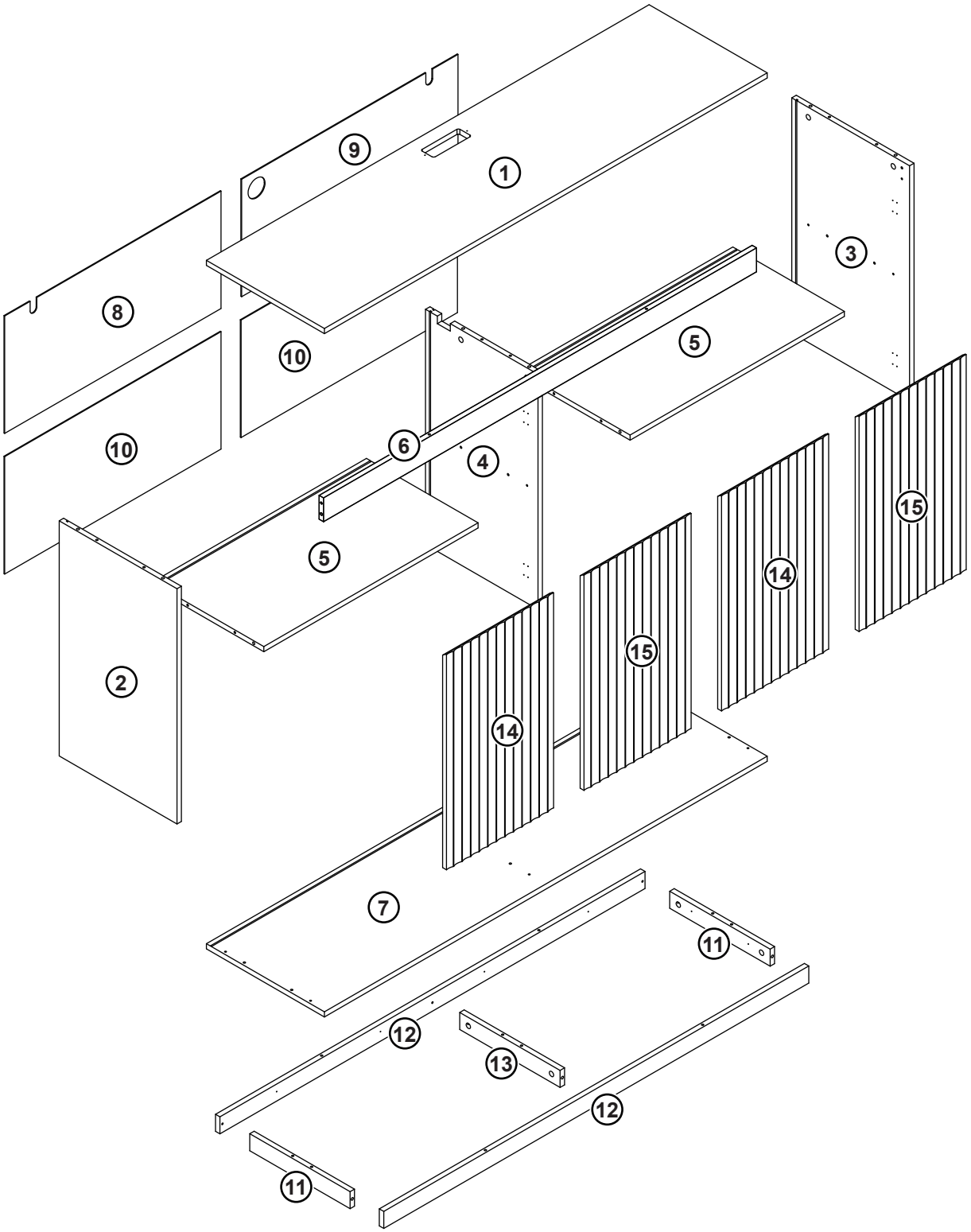

Fitting

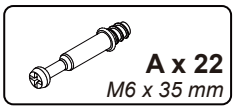
A x 22
M6 x 35 mm

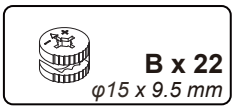
B x 22
φ15 x 9.5 mm

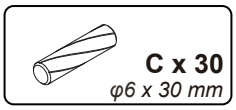
C x 30
φ6 x 30 mm


D x 6
φ4 x 40 mm


E x 32
φ3 x 12 mm

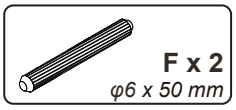
F x 2
φ6 x 50 mm


G x 2

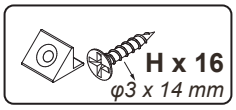
H x 16
φ3 x 14 mm

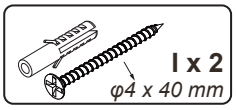
I x 2
φ4 x 40 mm

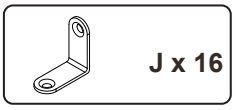
J x 16


K x 4
35 mm

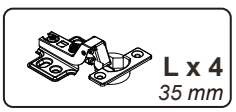
L x 4
35 mm

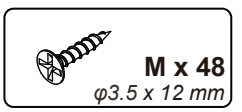
M x 48
φ3.5 x 12 mm

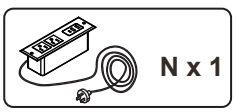
N x 1

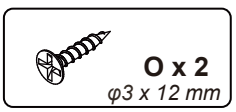
O x 2
φ3 x 12 mm

Step 1

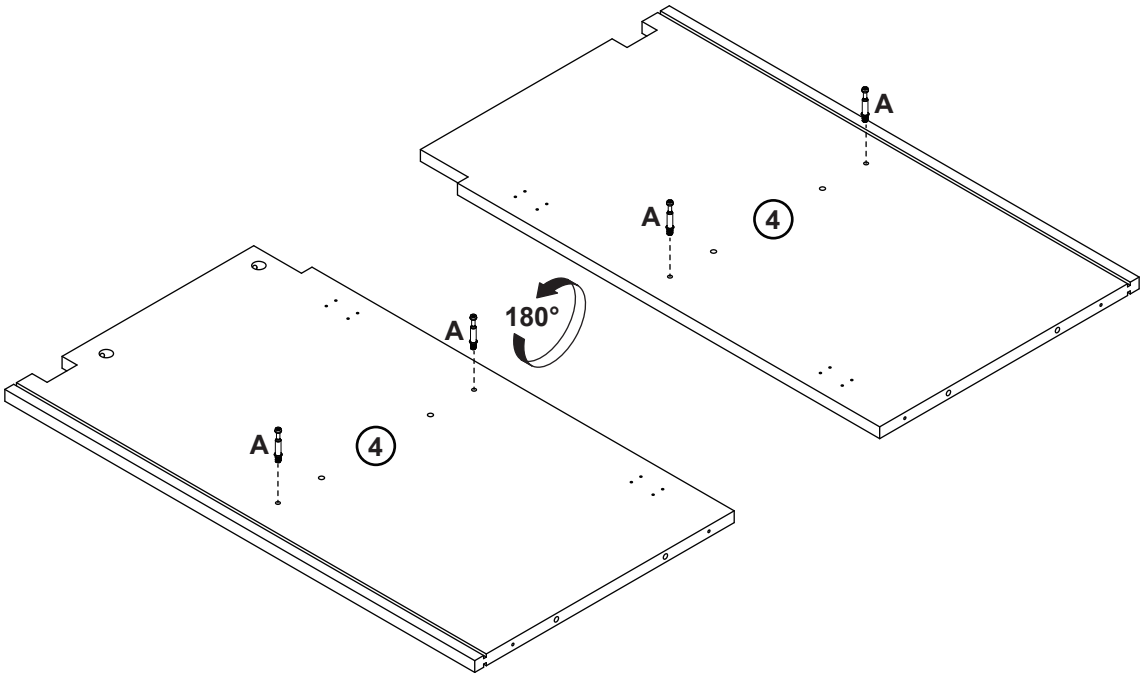

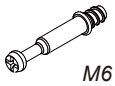

A x 4
M6 x 35 mm

Step 2

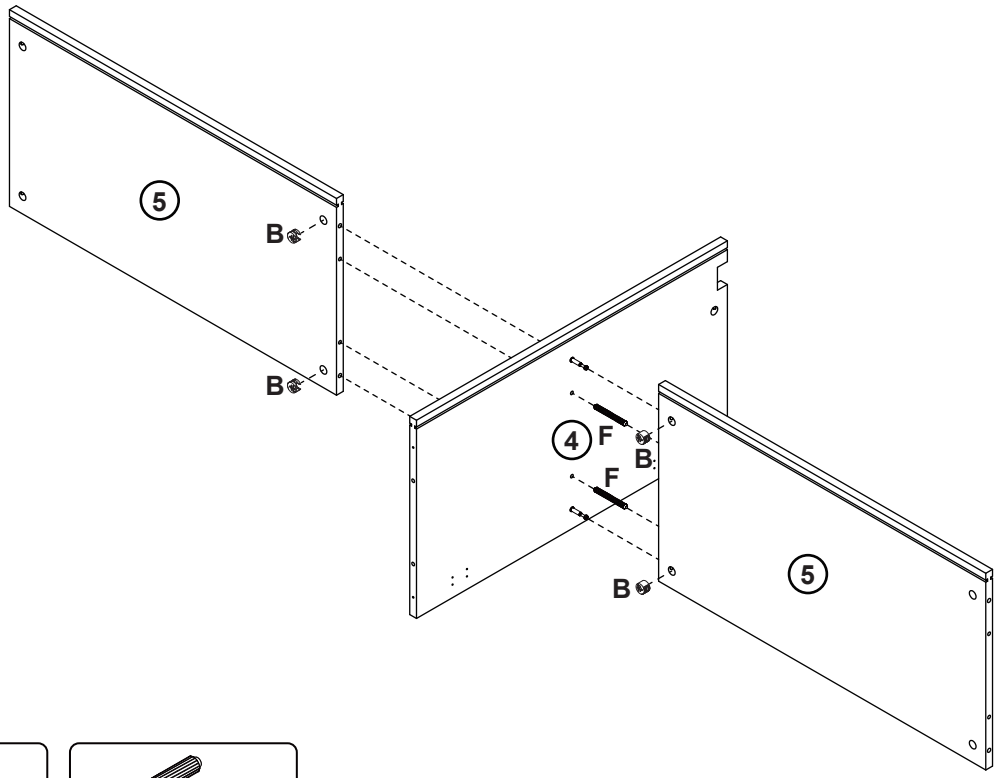



B x 4
φ15 x 9.5 mm

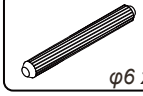

F x 2
φ6 x 50 mm

Step 3

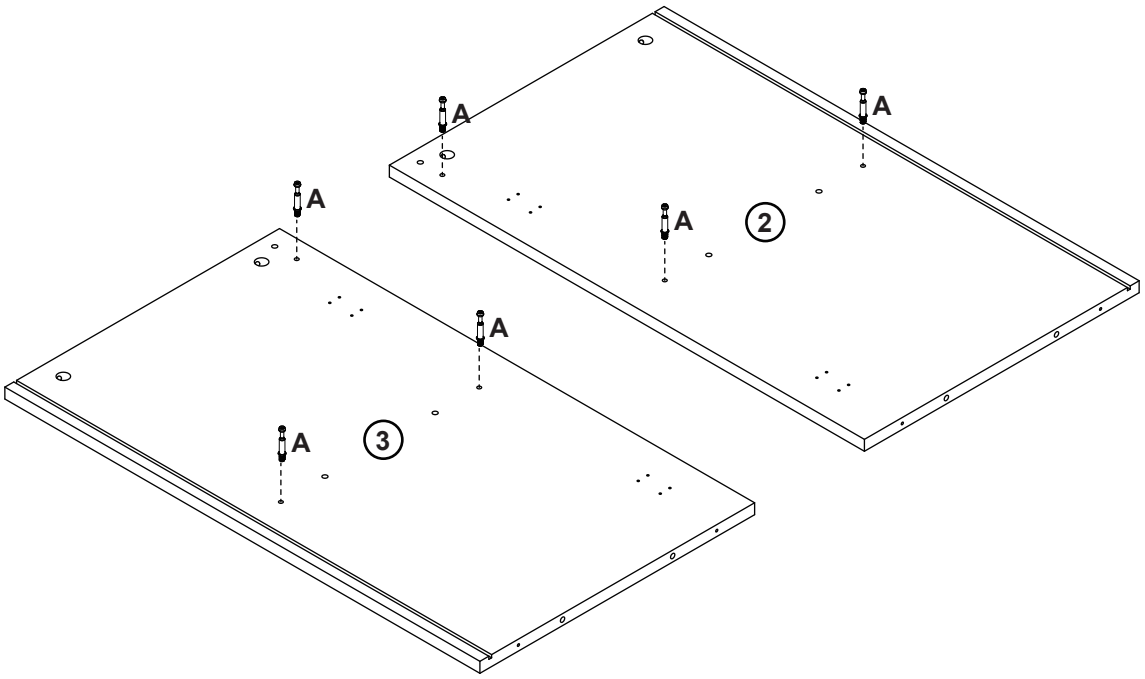



A x 6
M6 x 35 mm

Step 4

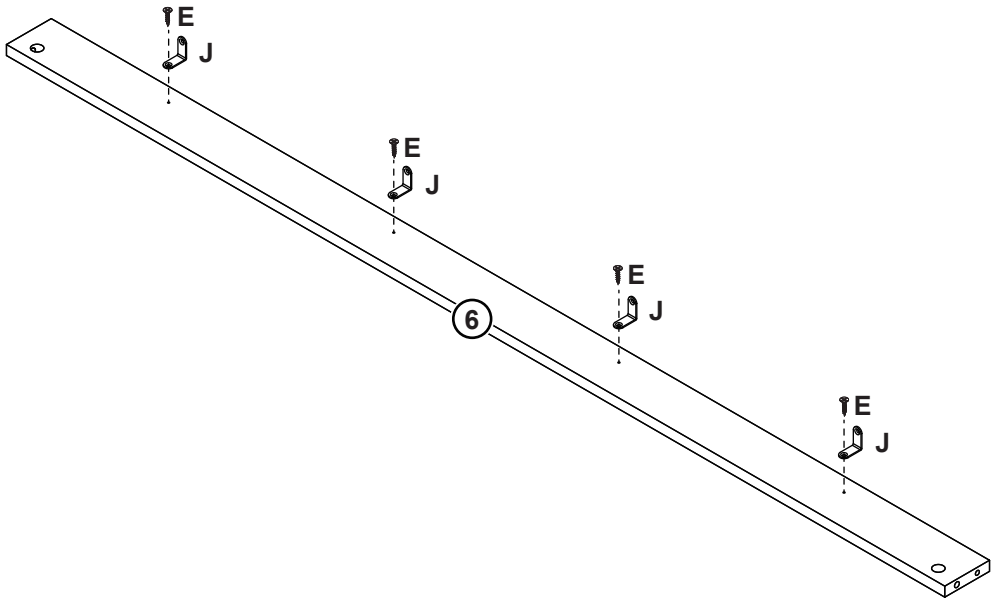



E x 4
φ3 x 12 mm



J x 4

Step 5

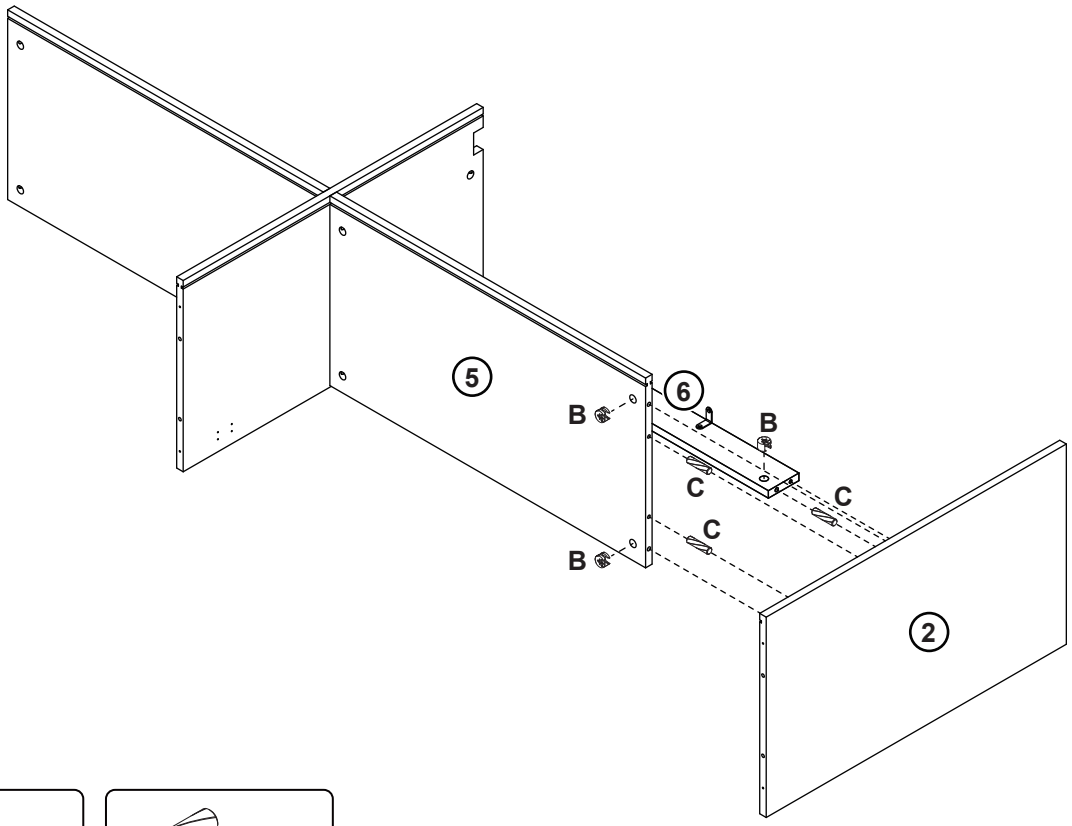

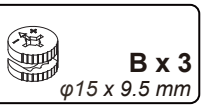
B x 3
φ15 x 9.5 mm


C x 3
φ6 x 30 mm

Step 6

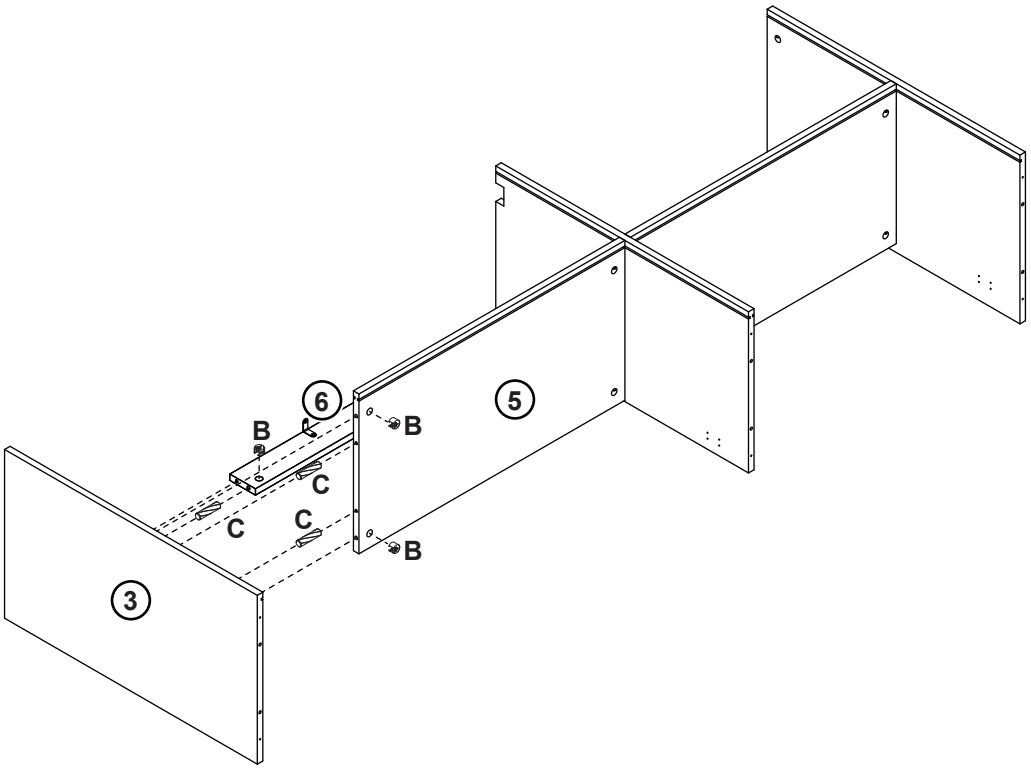


B x 3
φ15 x 9.5 mm


C x 3
φ6 x 30 mm

Step 7

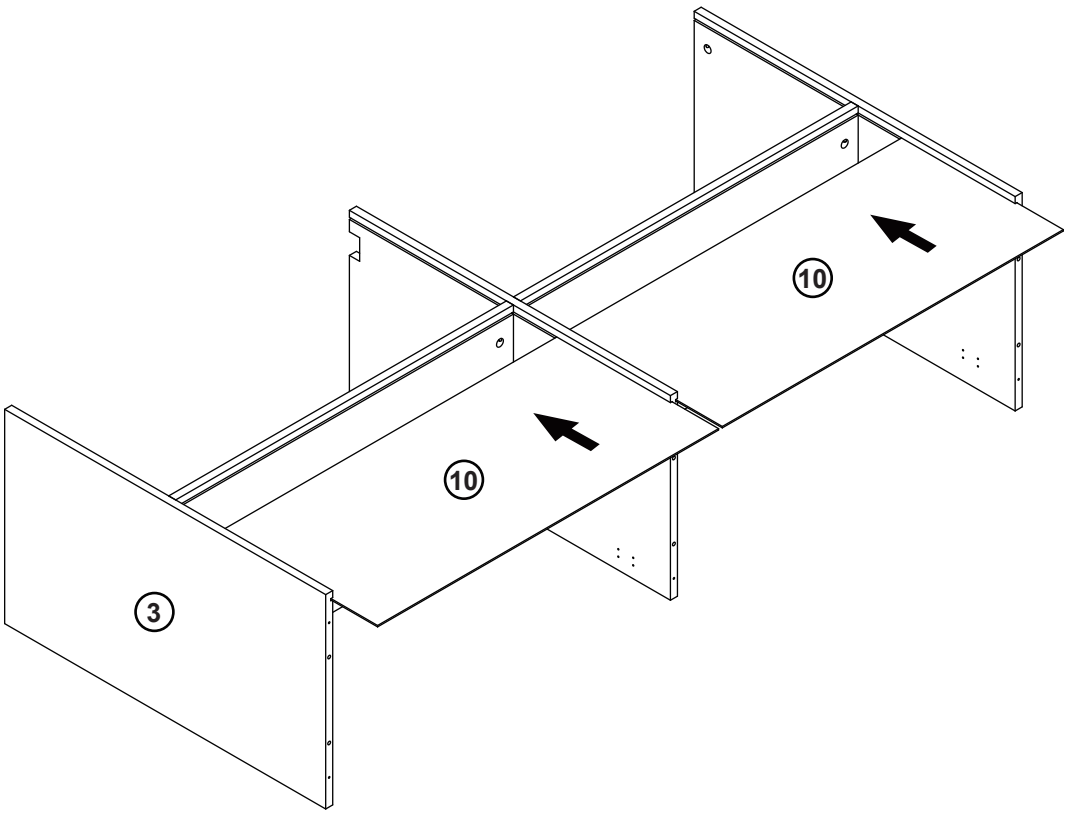

Step 8

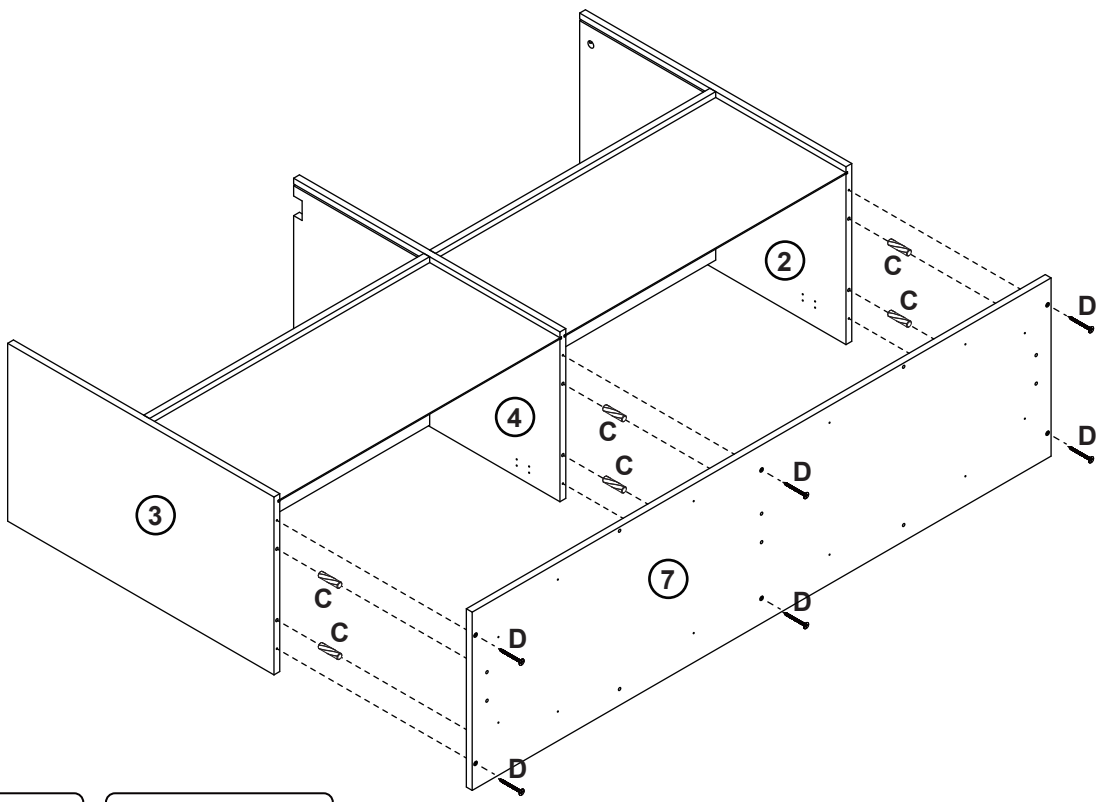


C x 6
φ6 x 30 mm

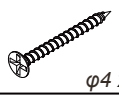
D x 6
φ4 x 40 mm

Step 9

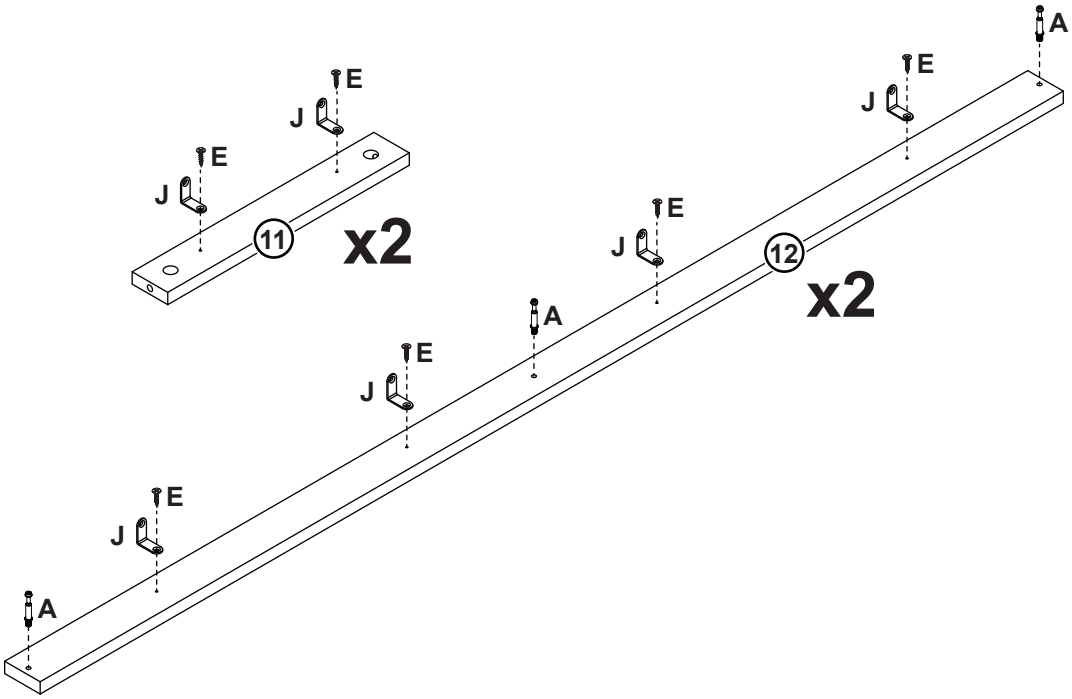

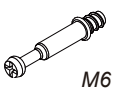
A x 6
M6 x 35 mm


E x 12
φ3 x 12 mm


J x 12

Step 10

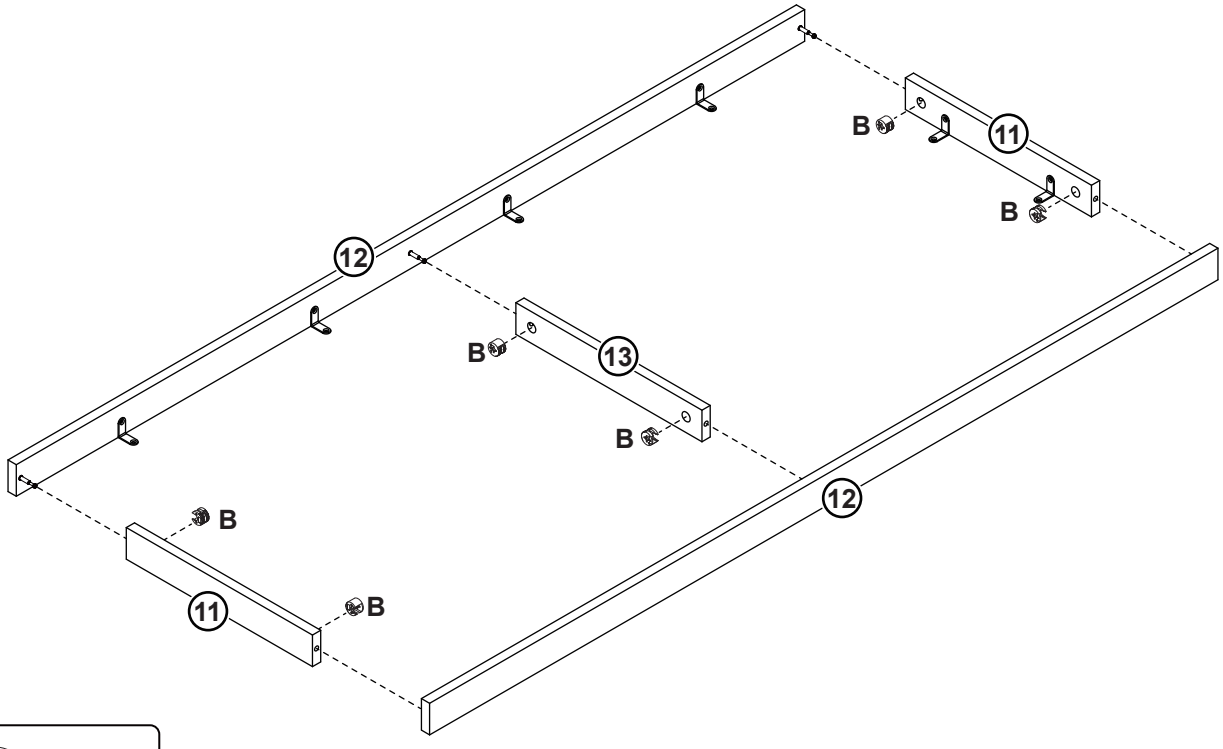


B x 6
φ15 x 9.5 mm

Step 11

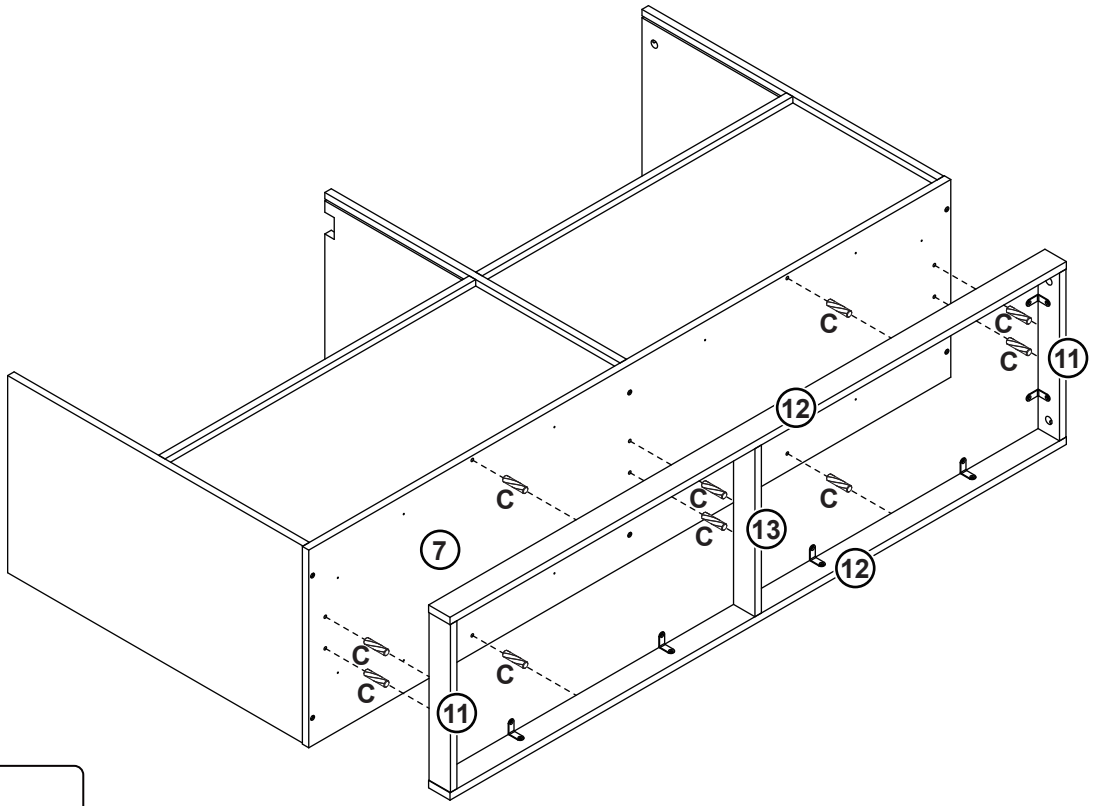



C x 10
φ6 x 30 mm

Step 12

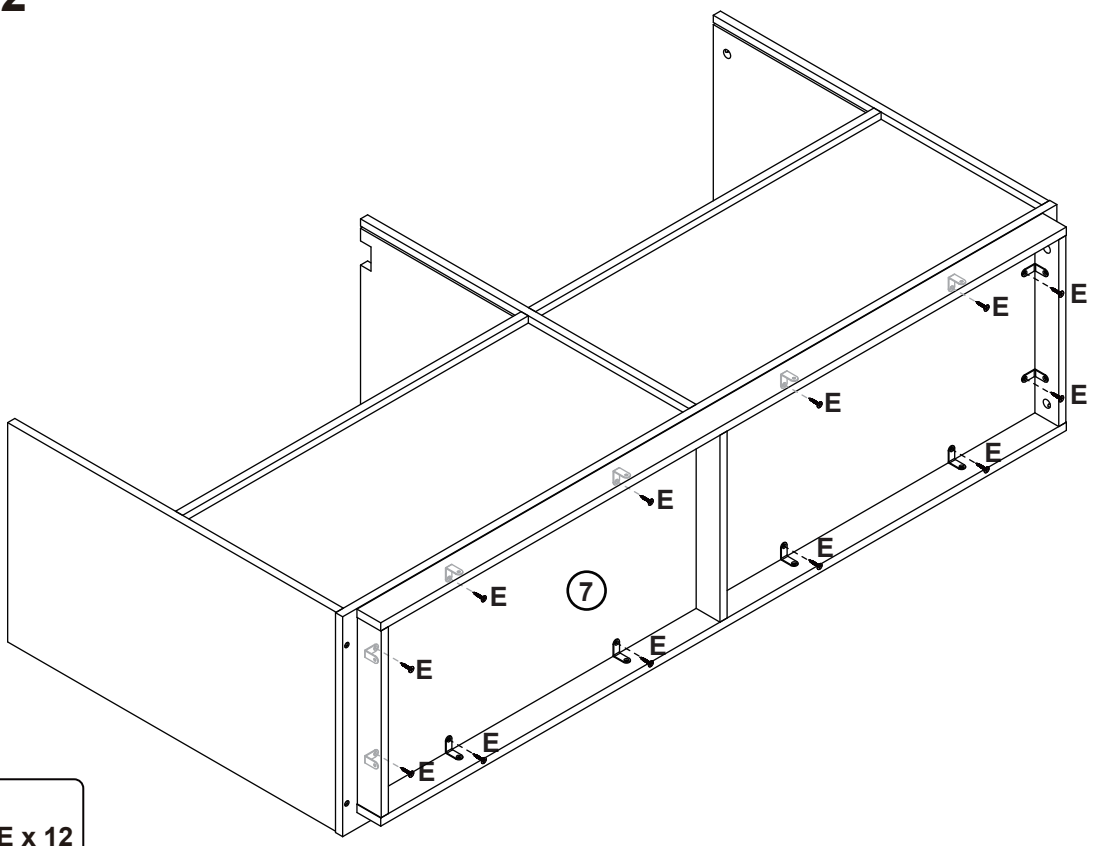



E x 12
φ3 x 12 mm

Step 13

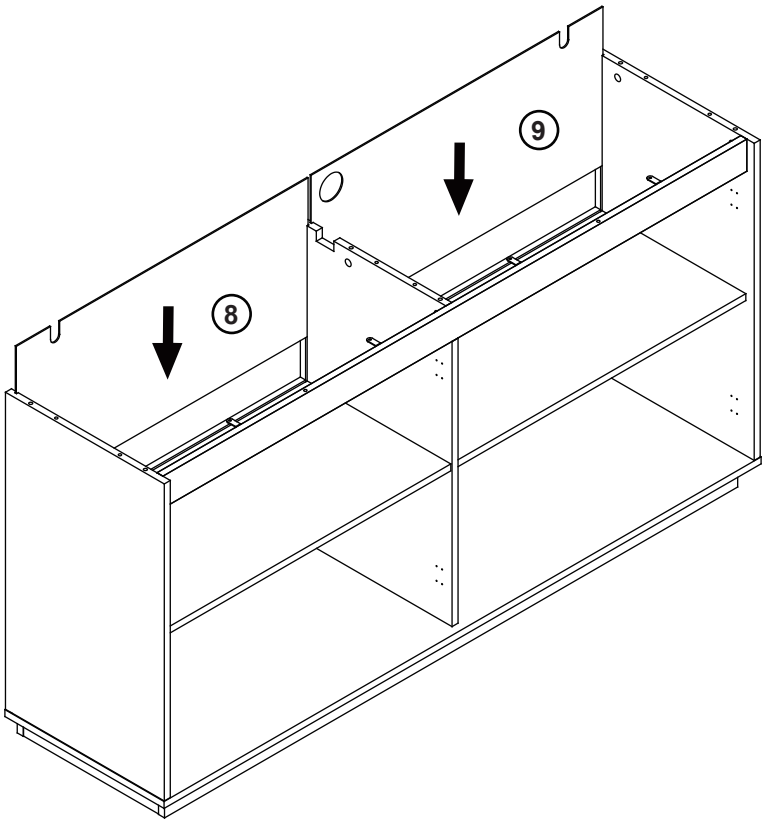

Step 14

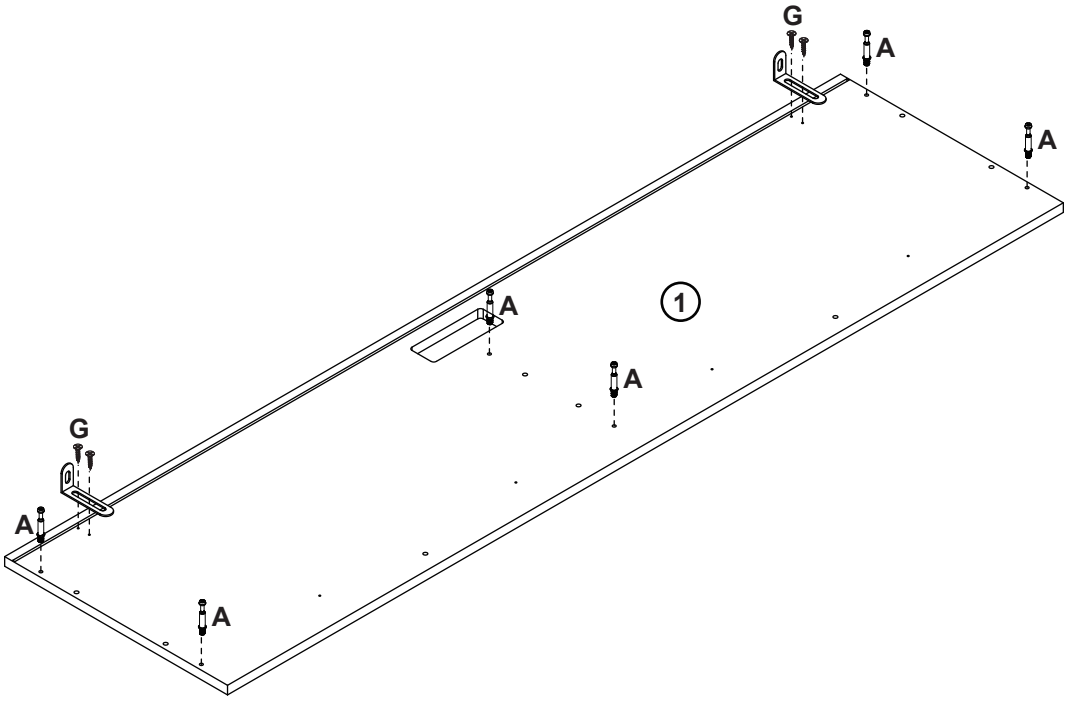

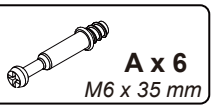



Step 15

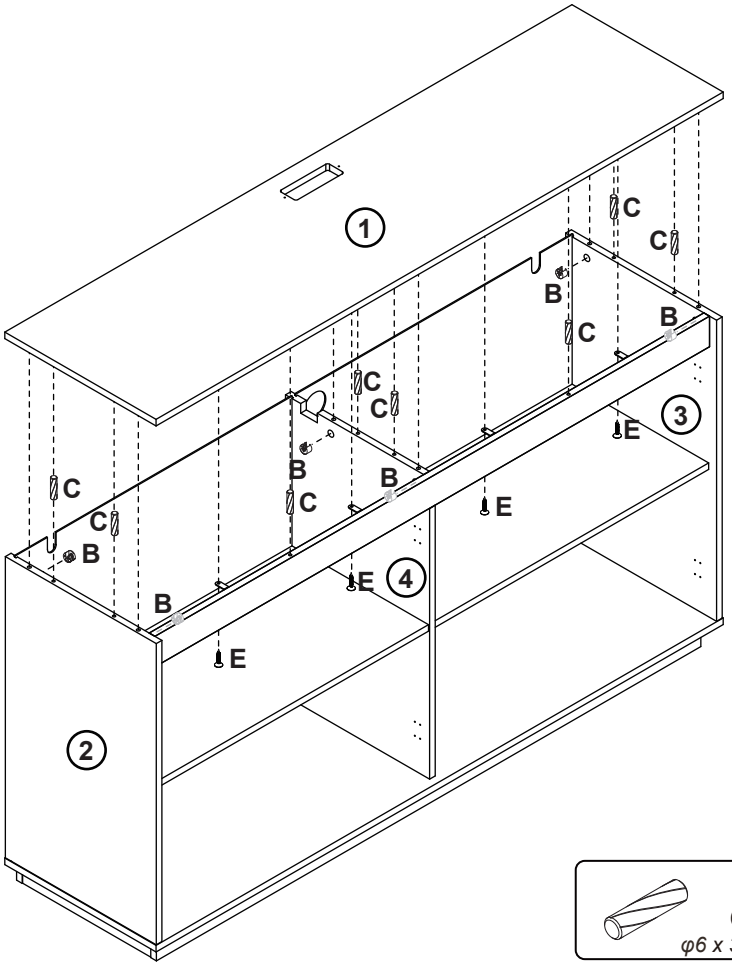



B x 6
φ15 x 9.5 mm

C x 8
φ6 x 30 mm



E x 4
φ3 x 12 mm

Step 16

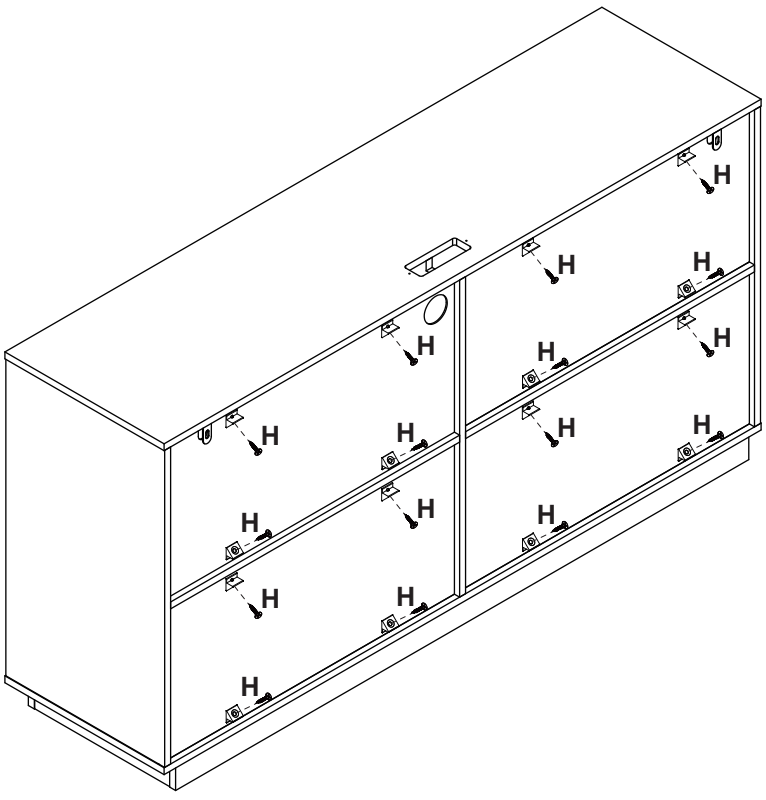

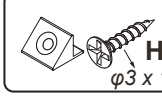

H x 16
φ3 x 14 mm

Step 17

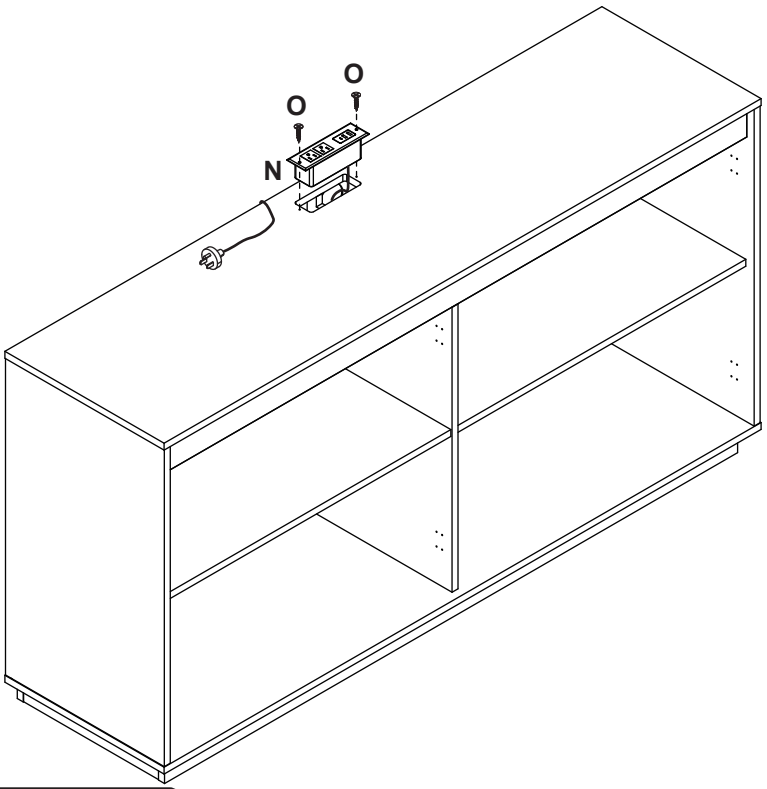


O x 2
φ3 x 12 mm

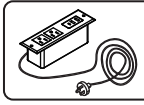
N x 1

Step 18

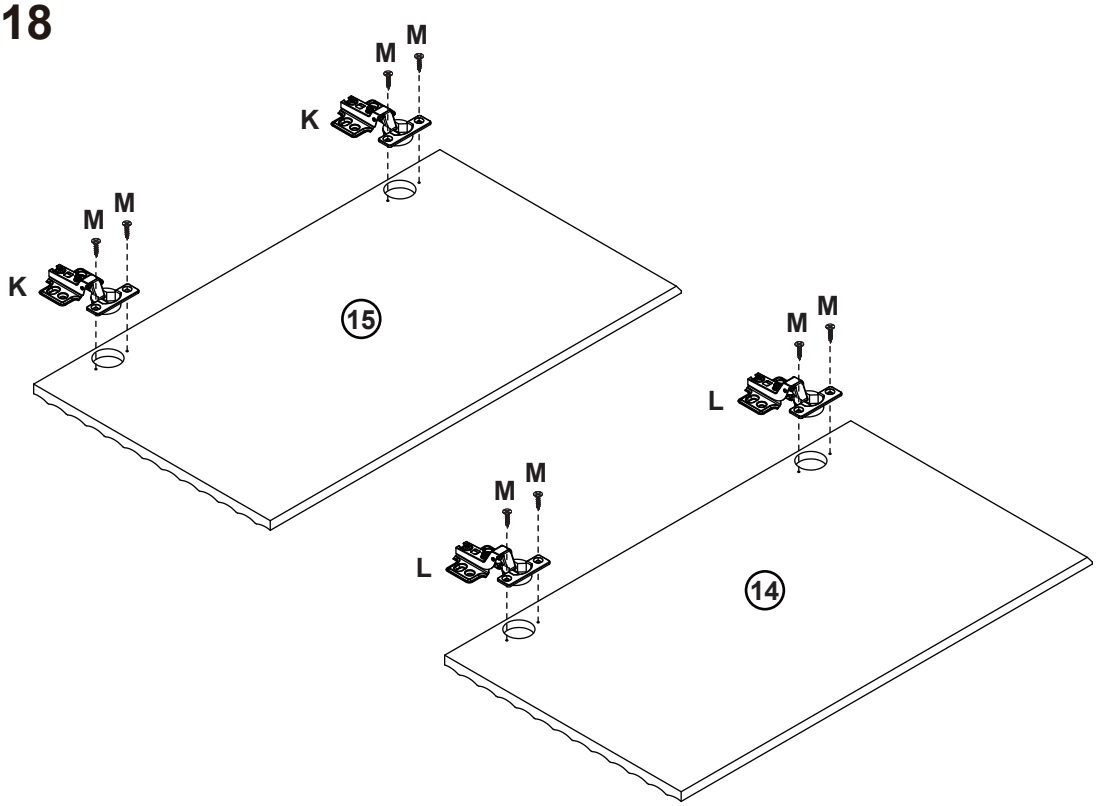


K x 2
35 mm


L x 2
35 mm


M x 8
φ3.5 x 12 mm

Step 19

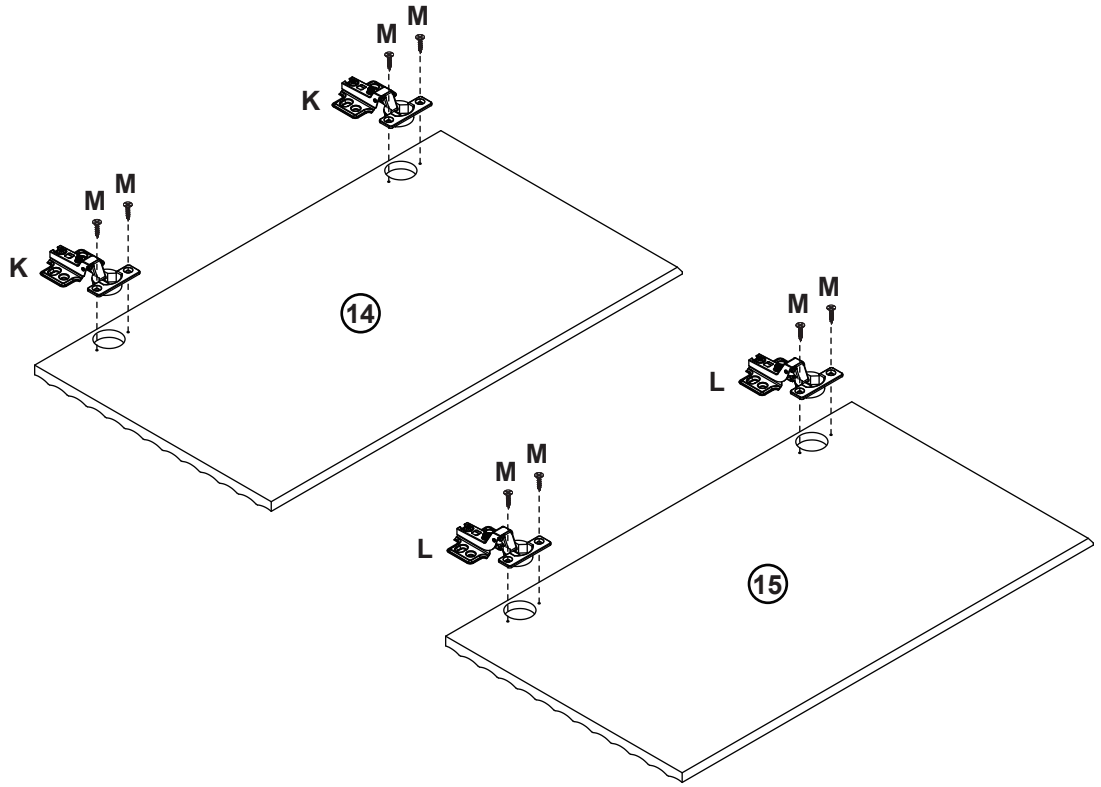

K x 2
35 mm

L x 2
35 mm

M x 8
φ3.5 x 12 mm

Step 20

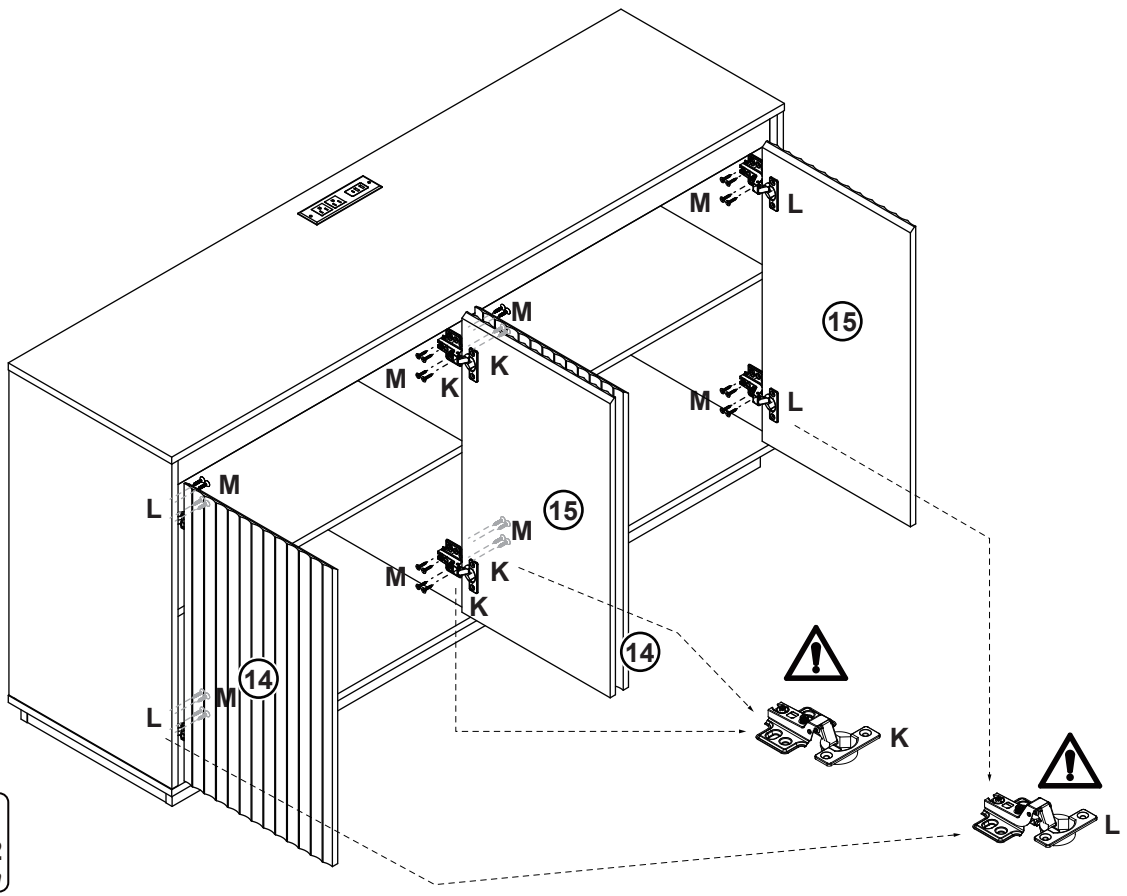

M x 32
φ3.5 x 12 mm

Step 21

Customer Attention:
To align doors and control gap in between doors. Product doors may need adjusting during and after assembly.
This can be done by adjusting appropriate screws. See below illustration.

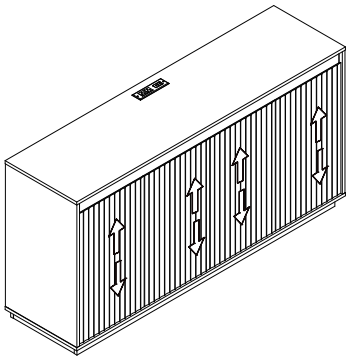

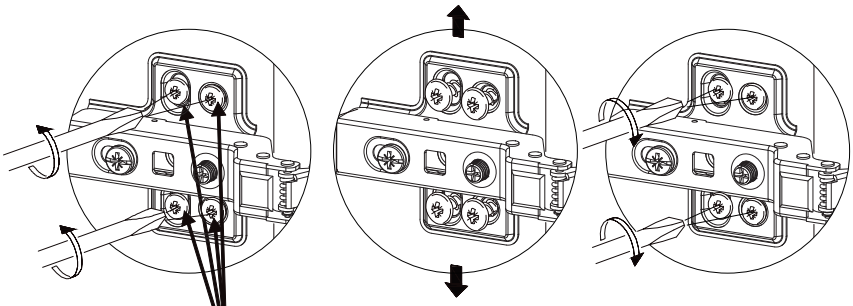

Vertical Door Adjustment:
Loosen both screws on all hinges and lift the door to the desired height.
This allows an even space at the top and bottom between the door and frame.

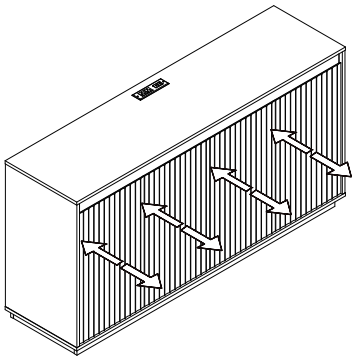

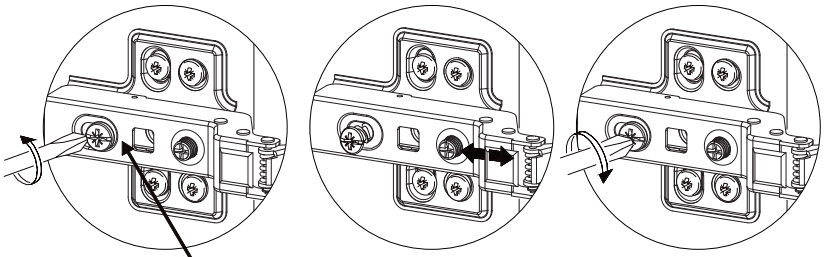

Lateral Door Adjustment:
If door is hinge bound, (rubbing on frame as you close or open door) loosening screw shown and move the door in approriate direction. (In or out)

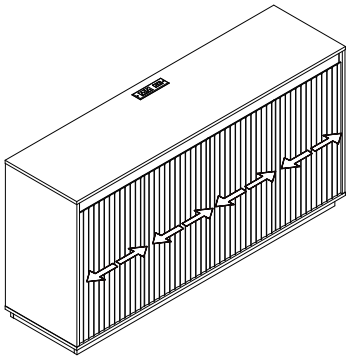

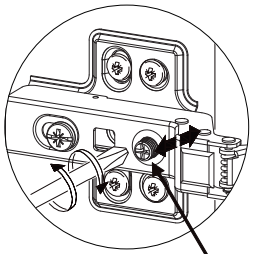

Horizontal Door Adjustment:
Rotate Screw clockwise or anticlockwise.
This will produce an even gap between doors and frame.

Step 22

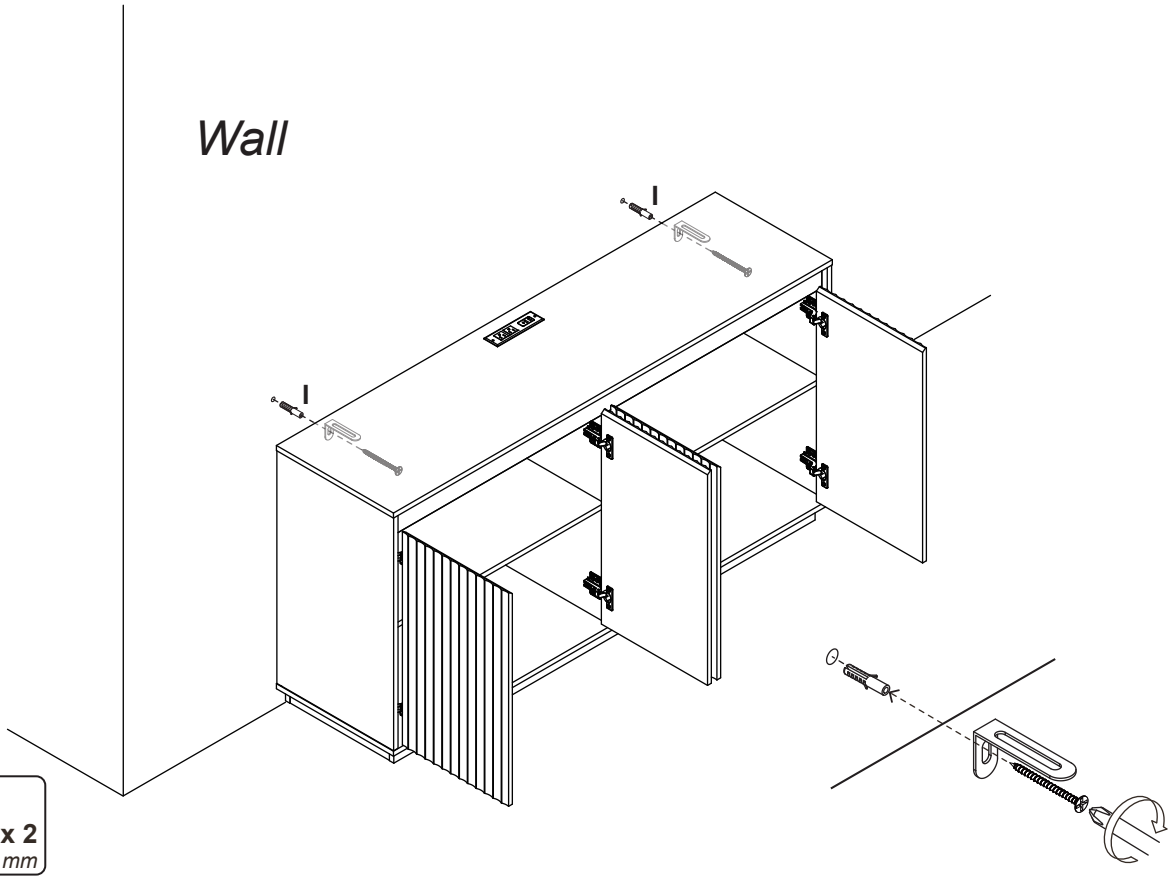

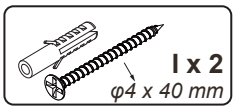

Step 23

