2-PANEL FENCE

Simple installation for a clean, stable corner layout

MODEL	**PXHJOT064WH** | White
MODEL	**PXHJOT064BK** | Black

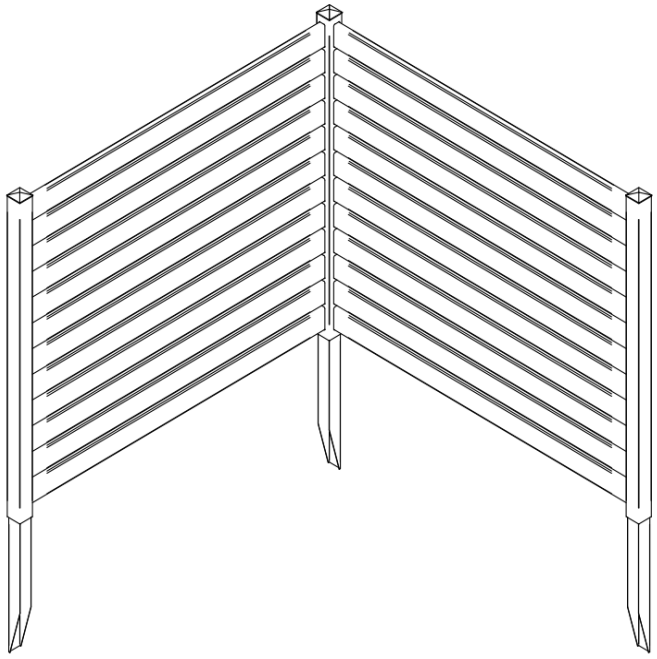

READ BEFORE ASSEMBLY

Check all parts, review the safety information, and keep these instructions for future reference.

Product Overview

Verify dimensions and installation conditions before assembly.

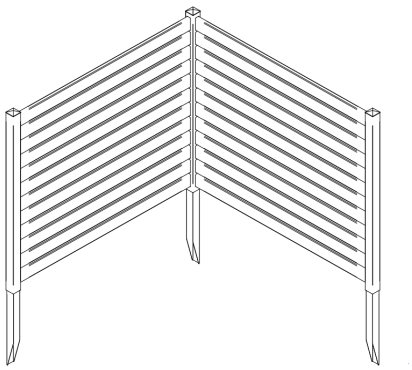

Approximate Dimensions

Panel width: 50 in

Panel height: 42 in

Corner footprint: 50 × 50 in

Recommended stake spacing: 48 in

Dimensions are approximate. Measure the actual assembled fence before setting the ground stakes.

DIMENSION VIEWS

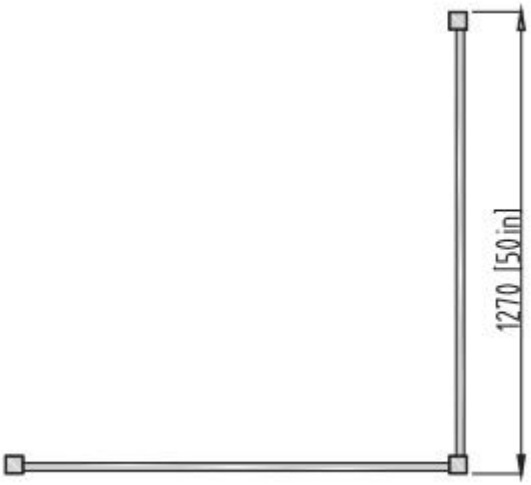

Top view

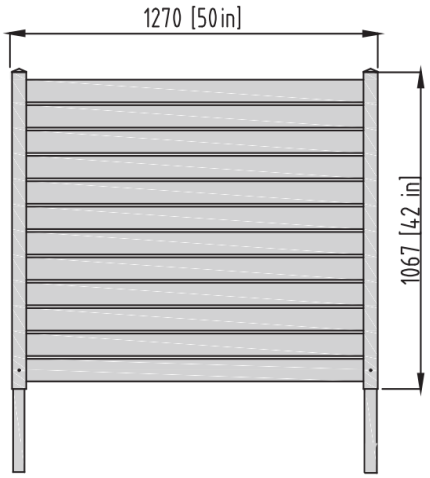

Side view

BEFORE YOU BEGIN

- Check that all parts are present and undamaged.
- Assemble on a flat, stable surface and wear work gloves.
- Use only on firm soil or lawn unless suitable mounting hardware is provided.
- Check for underground utilities before inserting stakes.
- Do not climb, sit, lean, or hang heavy objects on the fence.
- Keep children and pets away from the work area during installation.

Parts List

Compare the contents of the carton with the list below before assembly.

Item	Reference	Description	Qty.
Z	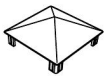	Post Cap	**3**
S1		Center / Corner Post (Post-A)	**1**
S3		Right End Post (Post-C)	**1**
S4		Left End Post (Post-D)	**1**
K	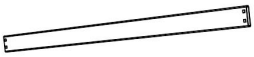	Horizontal Fence Rail	**24**
G	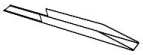	Ground Stake	**3**
U		3/16 × 3/4 in Self-Drilling Screw	**6**

TOOLS NEEDED

Work gloves	Tape measure	Drill / driver	Rubber mallet (optional)

1 Identify the Posts

Separate the three posts by their labels before inserting any rails.

IMPORTANT

The three posts are not interchangeable. Keep the labels visible until the frame is fully assembled.

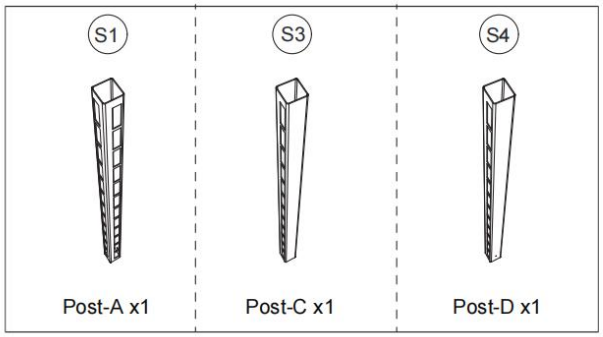

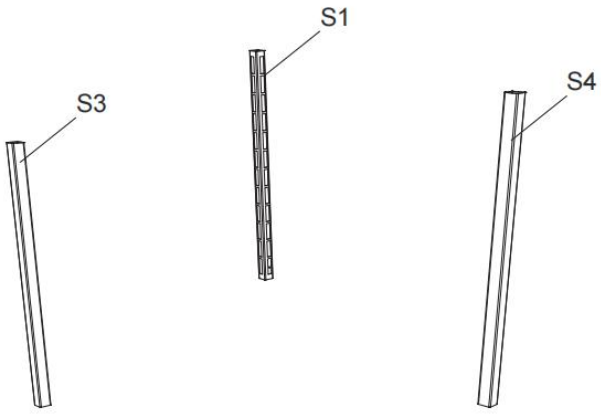

Identify each labeled post	Arrange the posts as shown
1	Locate the center/corner post S1 (Post-A).
2	Locate the right end post S3 (Post-C).
3	Locate the left end post S4 (Post-D).
4	Arrange the posts in the orientation shown before moving to Step 2.

2 Insert the Horizontal Rails

Install all 24 rails (K) between posts S1, S3, and S4.

RAIL INSERTION

Gently squeeze the spring tabs at the end of each rail inward. Do not permanently bend or flatten the tabs.

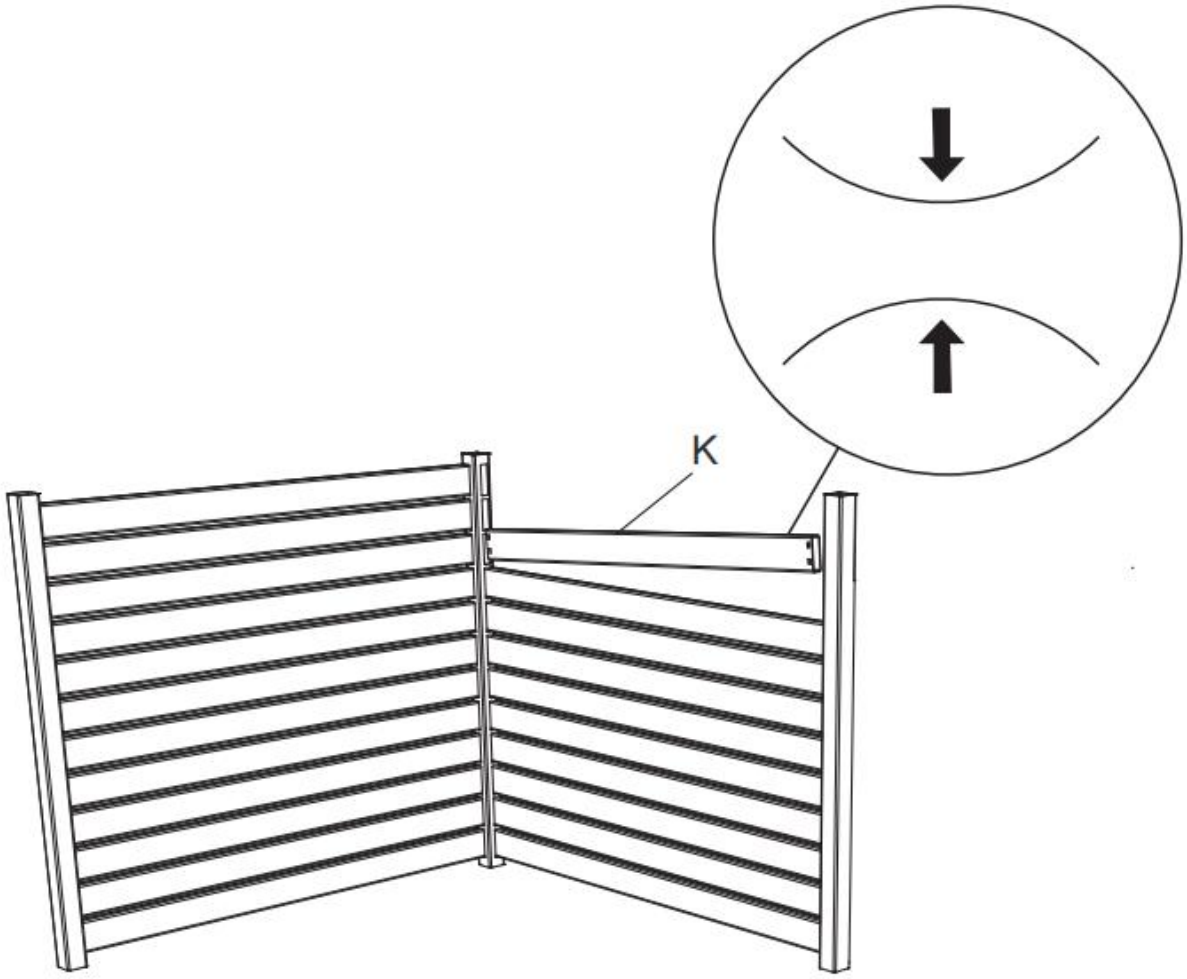

1	Begin at one side and align a horizontal rail (K) with the matching slots in the posts.
2	Squeeze the spring tabs inward and slide the rail into the slots.
3	Release the tabs and confirm the rail is fully seated and locked in place.
4	Repeat until all 24 rails are installed and both panels are aligned evenly.

3 Position the Ground Stakes

Measure carefully before inserting the three stakes (G).

MEASUREMENT NOTE

The assembled panel is approximately 50 in (1270 mm) wide. The diagram shows approximately 48 in (1220 mm) between adjacent ground-stake positions. Measure the actual frame before final placement.

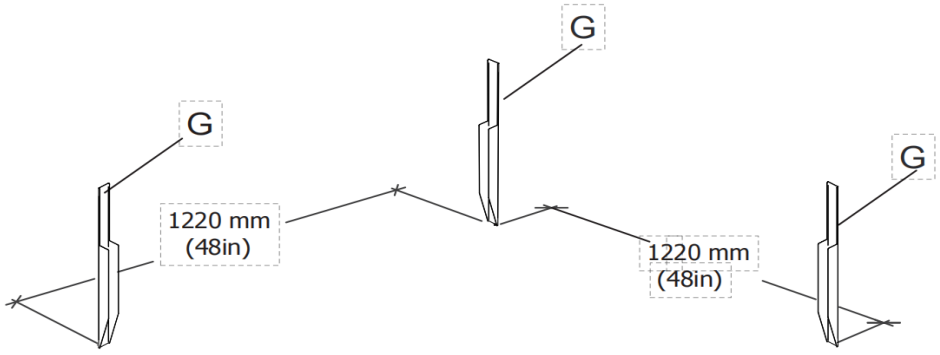

1	Choose firm, level soil and check the area for underground utilities.
2	Mark the center stake position, then mark the two end stake positions using the assembled fence as a guide.
3	Confirm the corner angle and spacing with a tape measure.
4	Insert each ground stake (G) vertically. Use a rubber mallet gently if the soil is firm.

CAUTION

Do not strike painted fence posts or post caps directly with a metal hammer. Incorrect spacing can affect alignment and stability.

4 Secure the Fence to the Stakes

Use two self-drilling screws (U) at each post — six screws total.

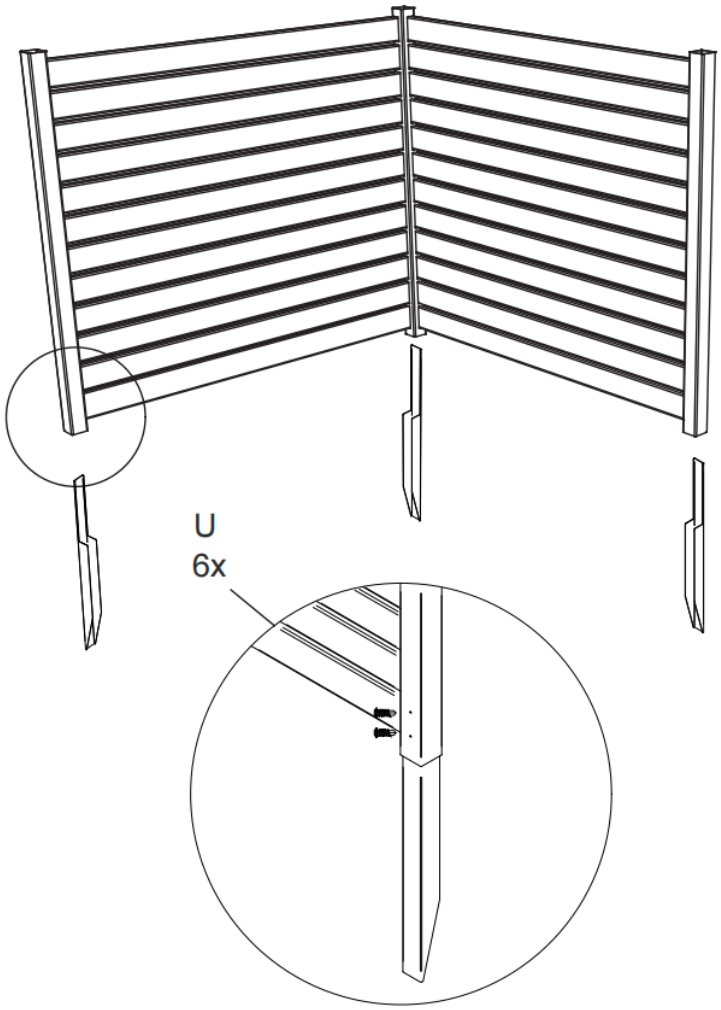

1	Lower the assembled fence posts over the three installed ground stakes.
2	Align each post so the fence is level and the corner angle is correct.
3	Drive two self-drilling screws (U) through each post at the indicated holes.
4	Tighten all six screws securely using low to moderate driver torque. Do not overtig'hten.

CHECK BEFORE CONTINUING

Gently move each panel by hand. The posts should remain seated and the fence should not twist or lean.

5 Install the Post Caps & Inspect

Complete the assembly and confirm all connections are secure.

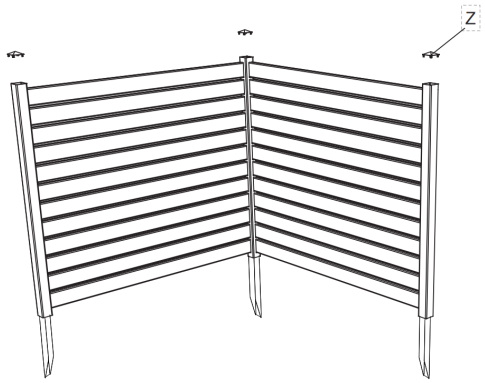

Install one post cap (Z) on each post.

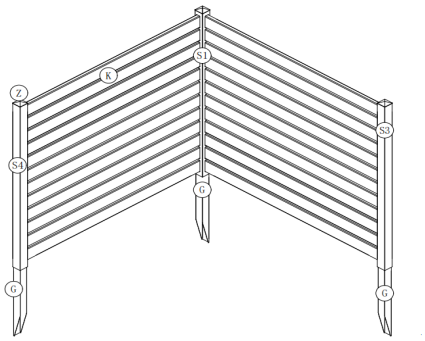

Completed assembly

FINAL INSPECTION

- ✓ All 24 rails are fully seated.
- ✓ All six screws are installed and tightened.
- ✓ All three post caps are secure.
- ✓ The posts are vertical and the panels are level.
- ✓ The ground stakes are firmly seated.
- ✓ The fence is stable and does not twist or lean.

CARE & MAINTENANCE

- Inspect the screws, rails, and ground stakes periodically; retighten or reseat them as needed.
- Clean with a soft cloth, mild soap, and water. Do not use abrasive cleaners.
- Remove the fence before severe weather if the installation area is exposed or the soil becomes unstable.