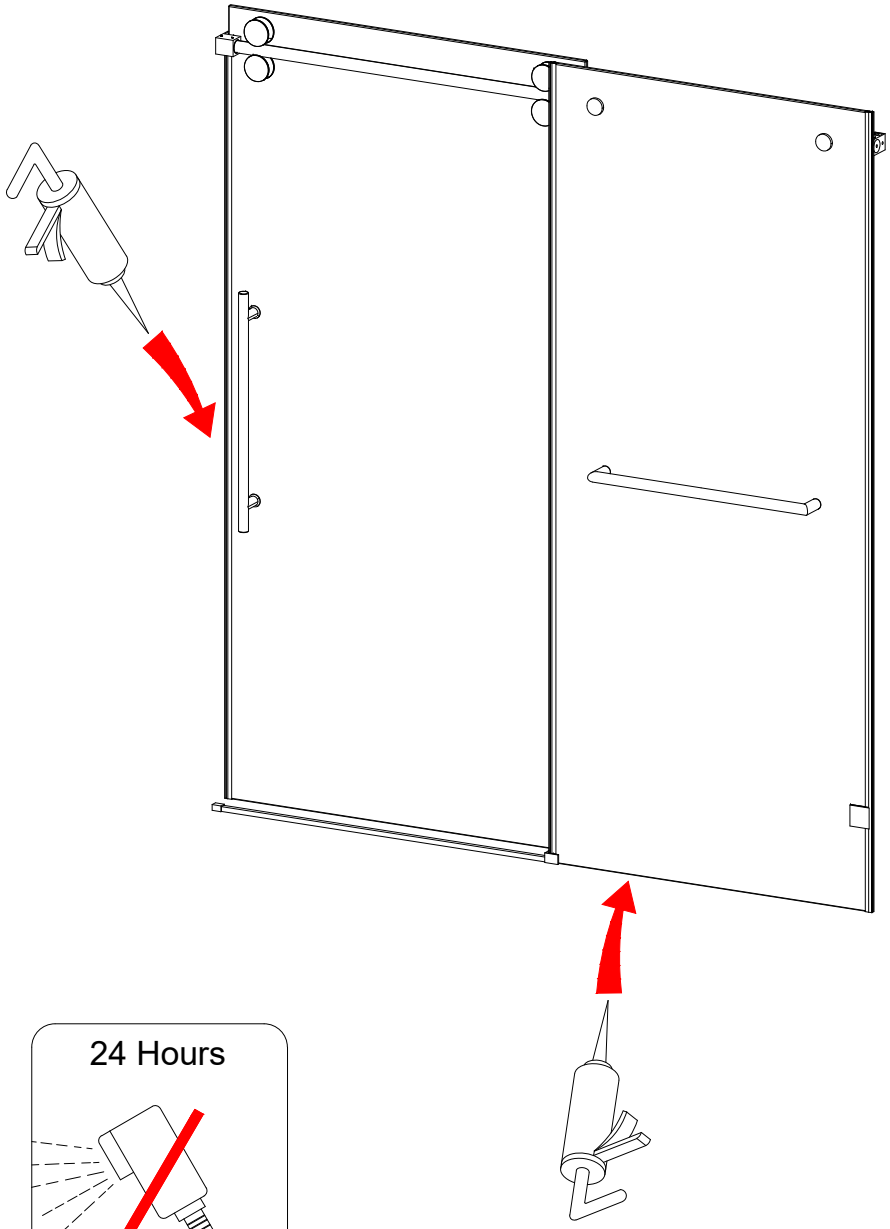

INSTALLATION MANUAL

GD10SH

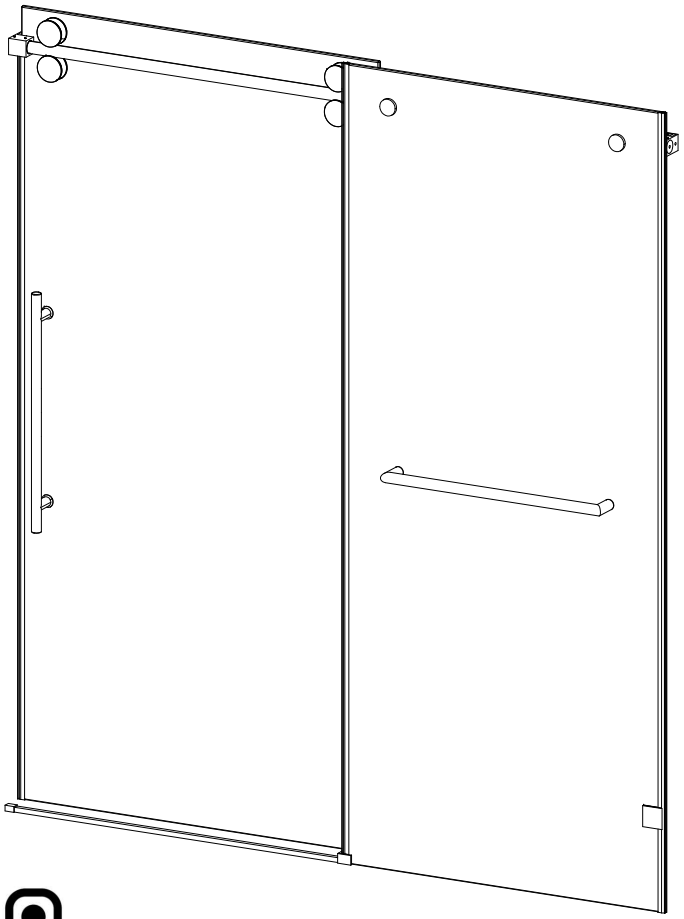

Scan the QR code for detailed video installation instructions

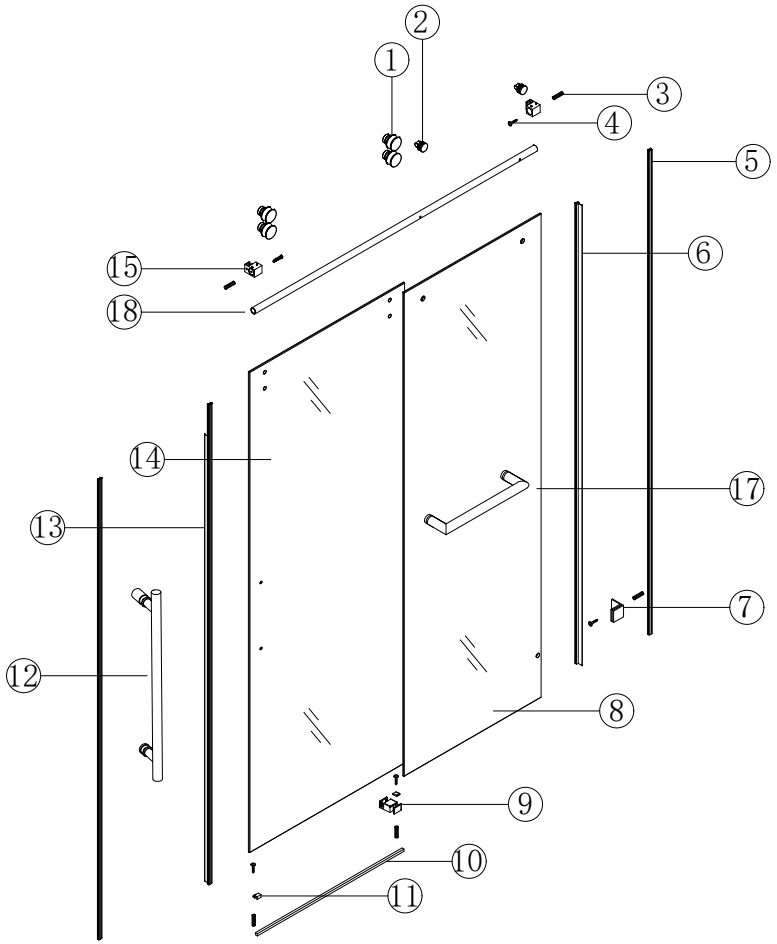

NO.	NAME	PICTURE	Qty
1	Pulley		4
2	Mirror nail		2
3	Expansion tube		6
4	ST4*35		6
5	Buffer rubber strip		2
6	Water blocking		1
7	Wall clip		1
8	Fixed glass		1
9	Lower slider		1

NO.	NAME	PICTURE	Qty
10	Water blocking material		1
11	Water blocking plug		1
12	Movable glass handle		1
13	Water blocking		1
14	Movable glass		1
15	Pipe sleeve		2
16	Holes Locator		1
17	Fixed glass handle		1
18	Upper Track		1

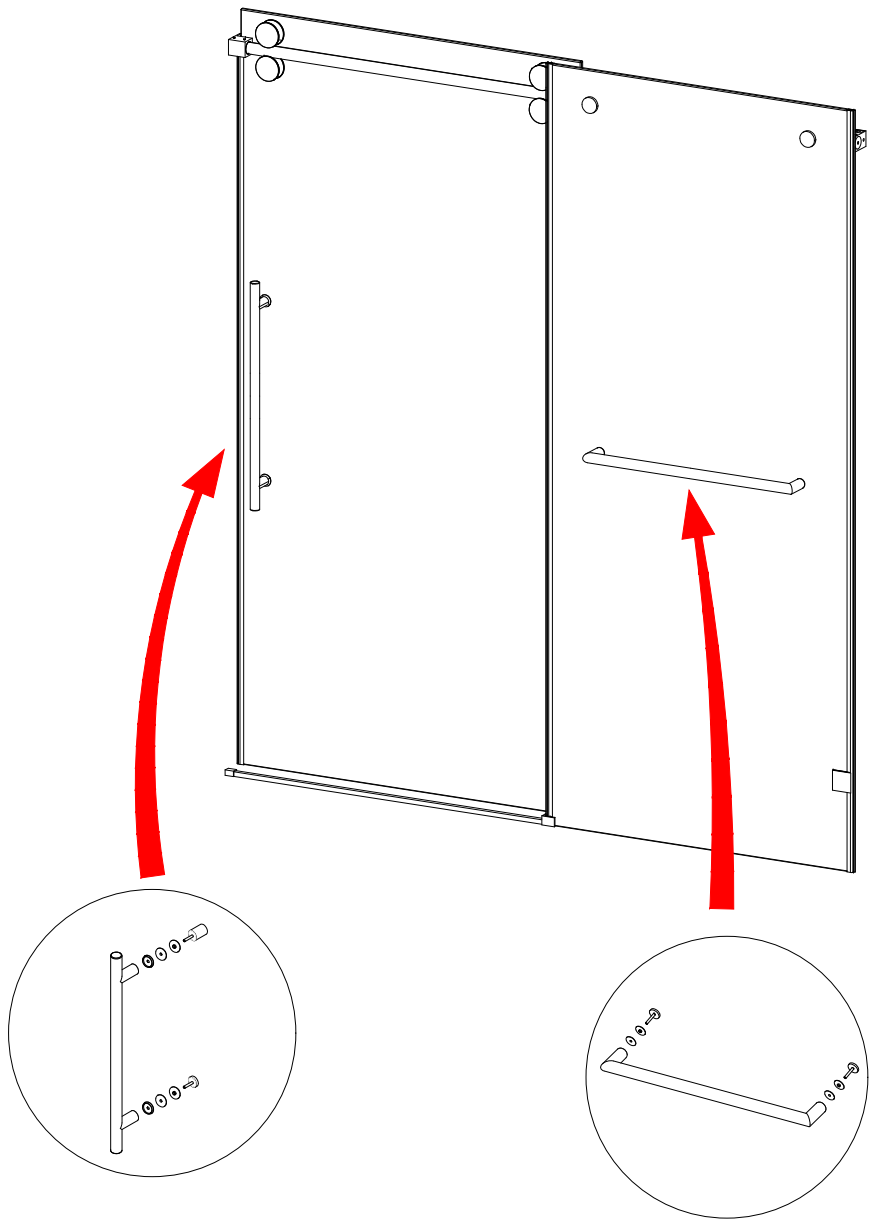

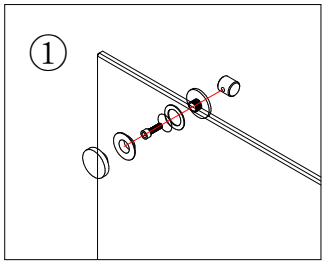

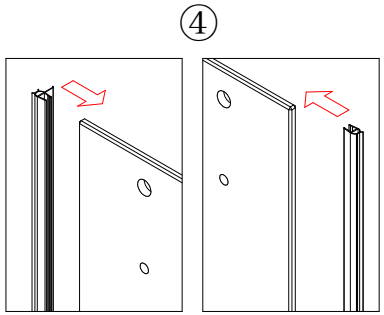

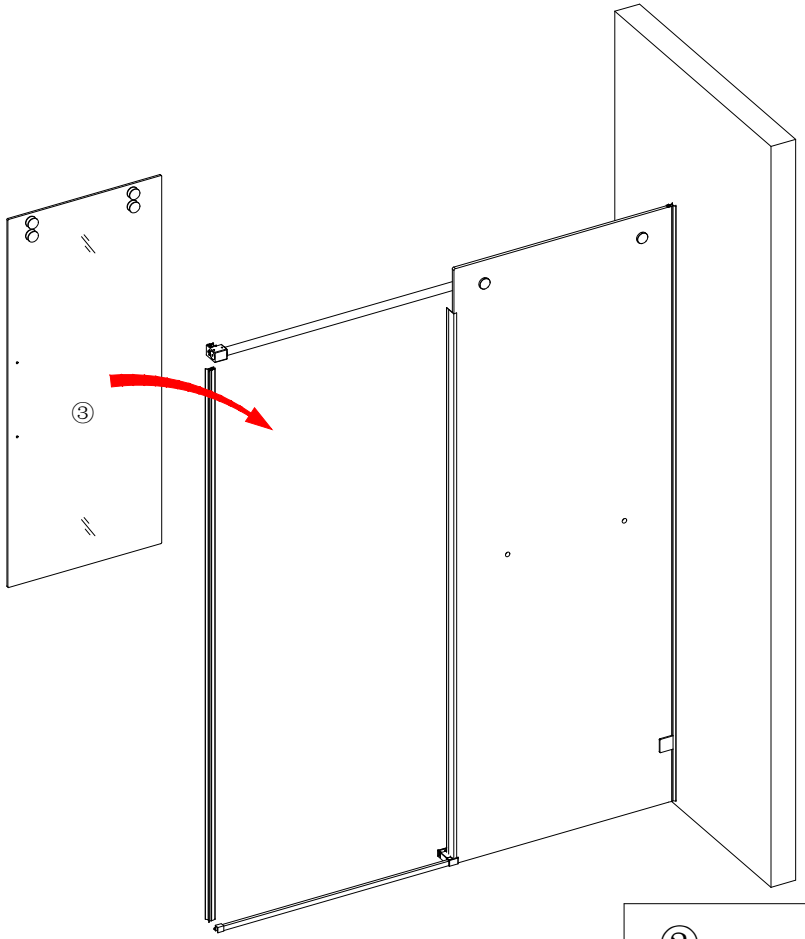

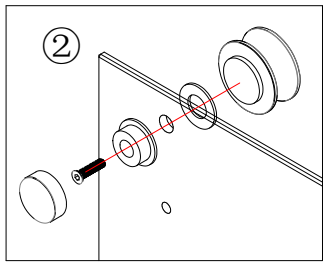

TOOLS REQUIRED (NOT SUPPLIED)

- When you're ready to start, make sure that you have the following tools to hand, plenty of space and a clean dry area for assembly.
- Two people are needed.
- Please note: although these instructions are comprehensive, we always recommend that a technically competent installer should undertake installation.

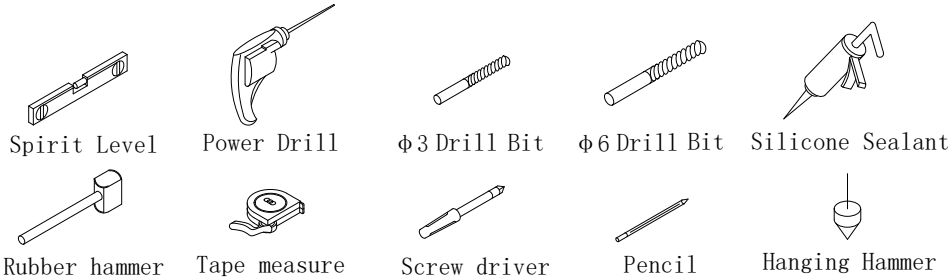

PRE - INSTALLATION AND TECHNICAL REQUIREMENTS

- All dimensions are shown in millimeters, except where otherwise indicated.
- Ensure that the enclosure set is fitted to a level floor and vertical wall surface.
- Please note: the wall fixings included with this product are suitable for solid walls only.
- Plasterboard or stud walls may require specialist fixings (not supplied).

IMPORTANT SAFETY NOTES

- Please handle all glass with care, avoiding knocks or shock loading to all sides and edges.
- Safety glass cannot be reworked.
- Please take care when drilling into walls to avoid hidden pipes or electrical cables.

AFTERCARE INSTRUCTIONS

- Soap and water will be adequate to clean the glass a glass cleaner can be used if required.
- In hard water districts, insoluble lime salts may be deposited on the glass. If this deposit is allowed to build up it becomes increasingly difficult to remove and looks unsightly. Regular cleaning will minimise this effect.

Attention: Save more time
with the Holes Locator

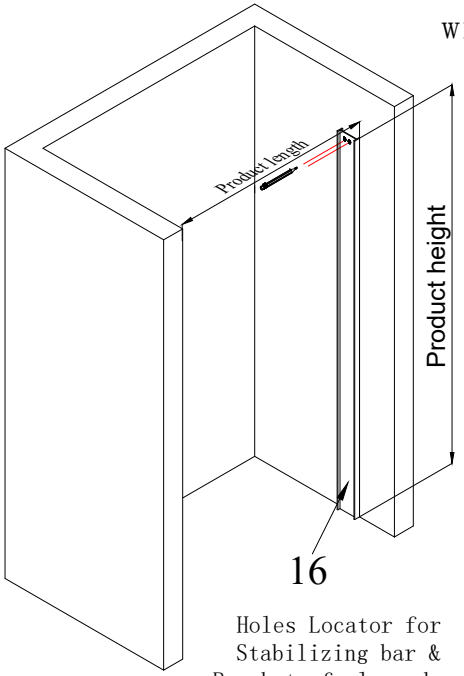

Holes Locator for
Stabilizing bar &
Bracket of glass door

