ASSEMBLY INSTRUCTION GUIDE

MODEL NUMBER: 903

(You can directly browse to the prompt page based on the purchased size)

SIZE:		PAGE NUMBER:
903T-TWIN	----------	2
903F-FULL	----------	2
903Q-QUEEN	----------	2
903K-KING	----------	11

ASSEMBLY INSTRUCTION

MODEL NUMBER:903-1T/F/Q

NOTES:

- Do not skip any step.
- Do not fully tight screws until all the bed parts are assembled.

WARNING:

- WARNIND FOR YOUNG CHILDREN-This product contains small components,please ensure that they are kept away from small children while assembling.

Warranty Information:

- We warranty this product to be free from defects in materials.If u have any query about bed,pls contact our after -sale support email: Pakkahome@outlook.com

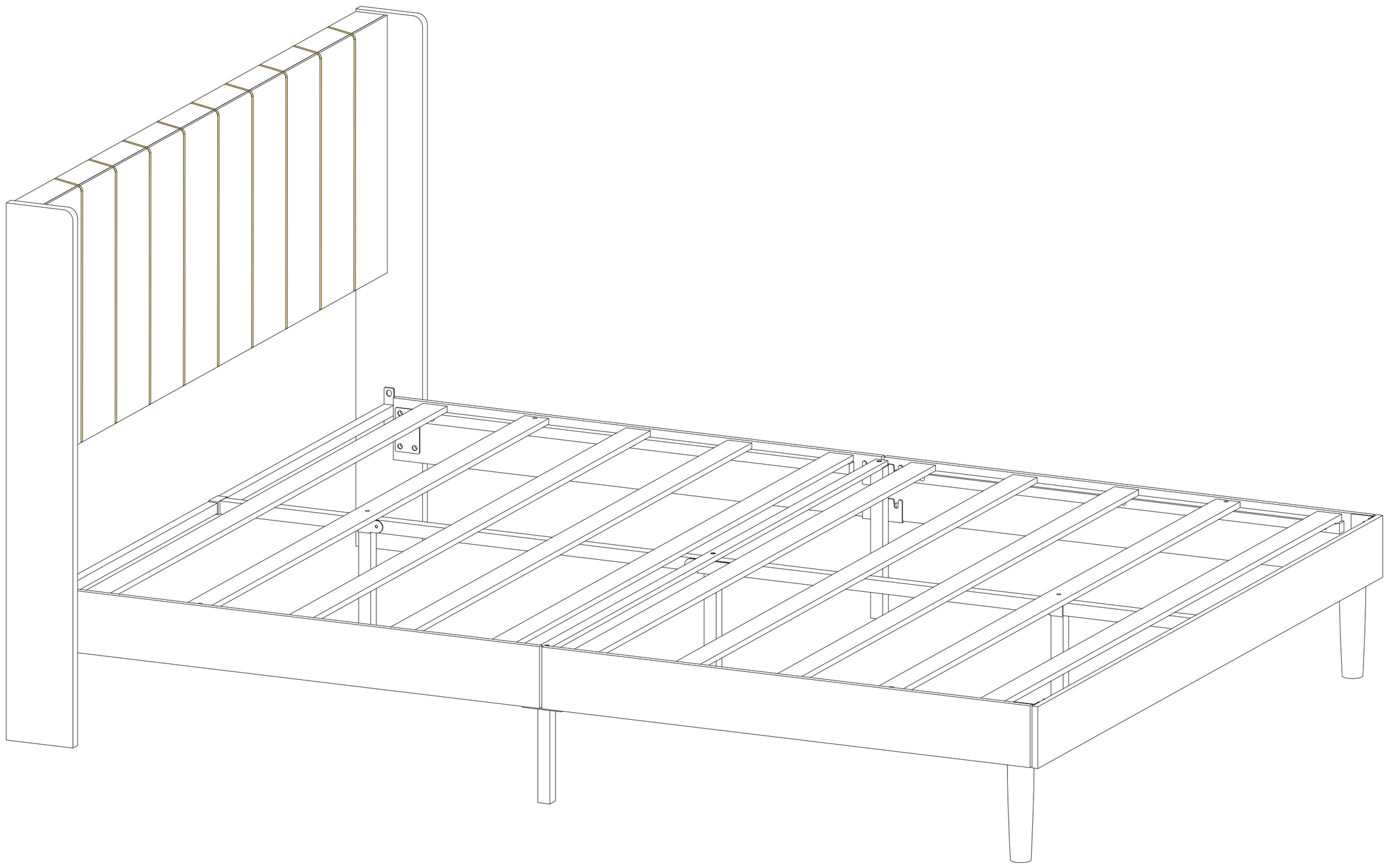

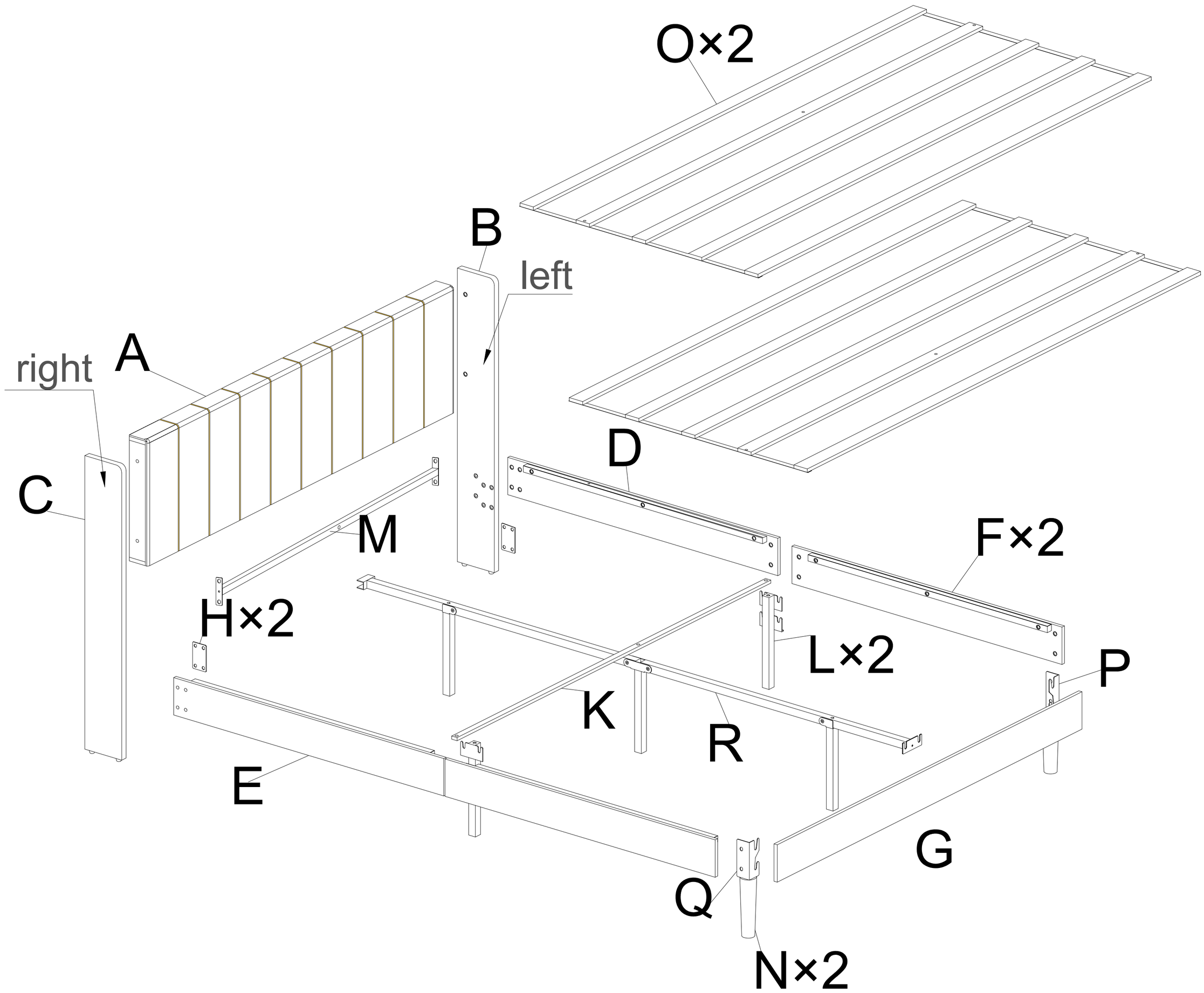
O×2
B
left
right
A
D
C
M
F×2
H×2
L×2
P
K
R
E
G
Q
N×2

A	1PC
B	left 1PC
C	right 1PC
D	1PC
E	1PC
F	2PCS
G	1PC
H	2PCS
K	1PC
L	2PCS
M	1PC
N	2PCS
O	2PCS
P	1PC
Q	1PC
R	1PC

aa	M6*55	4
bb	M8x20	4
cc	M8x32	14
dd	M8x15	18
ee	5mm	1
ff		7

ii		1

SPARE	aa		1
	bb		1
	cc		1
	dd		1
	ff		1

cc	M8x32	4
ee	5mm	1
ff		4

Step 1

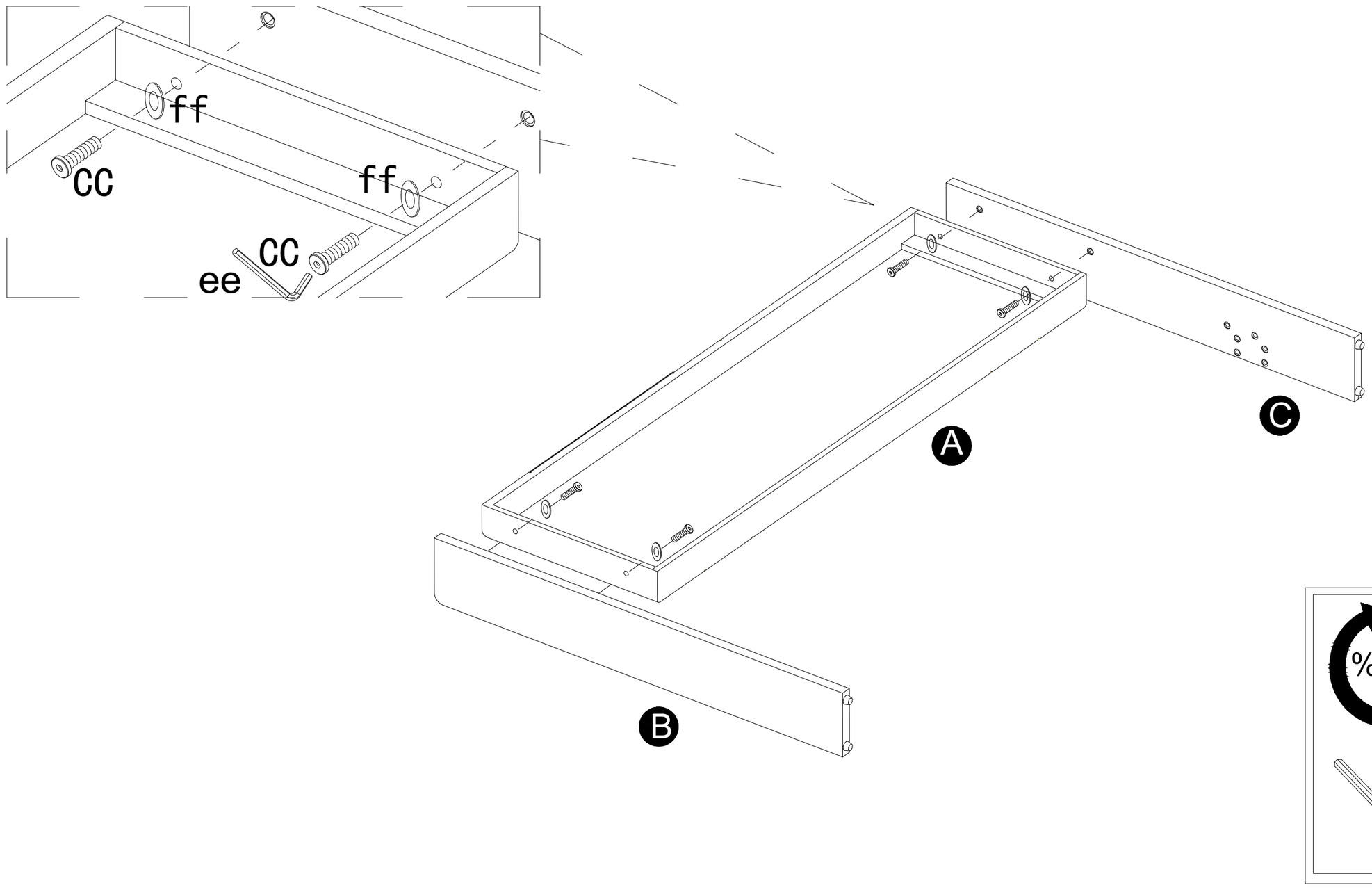

aa	M6x55	2
ee	5mm	1

Step 2

Important: tight screws

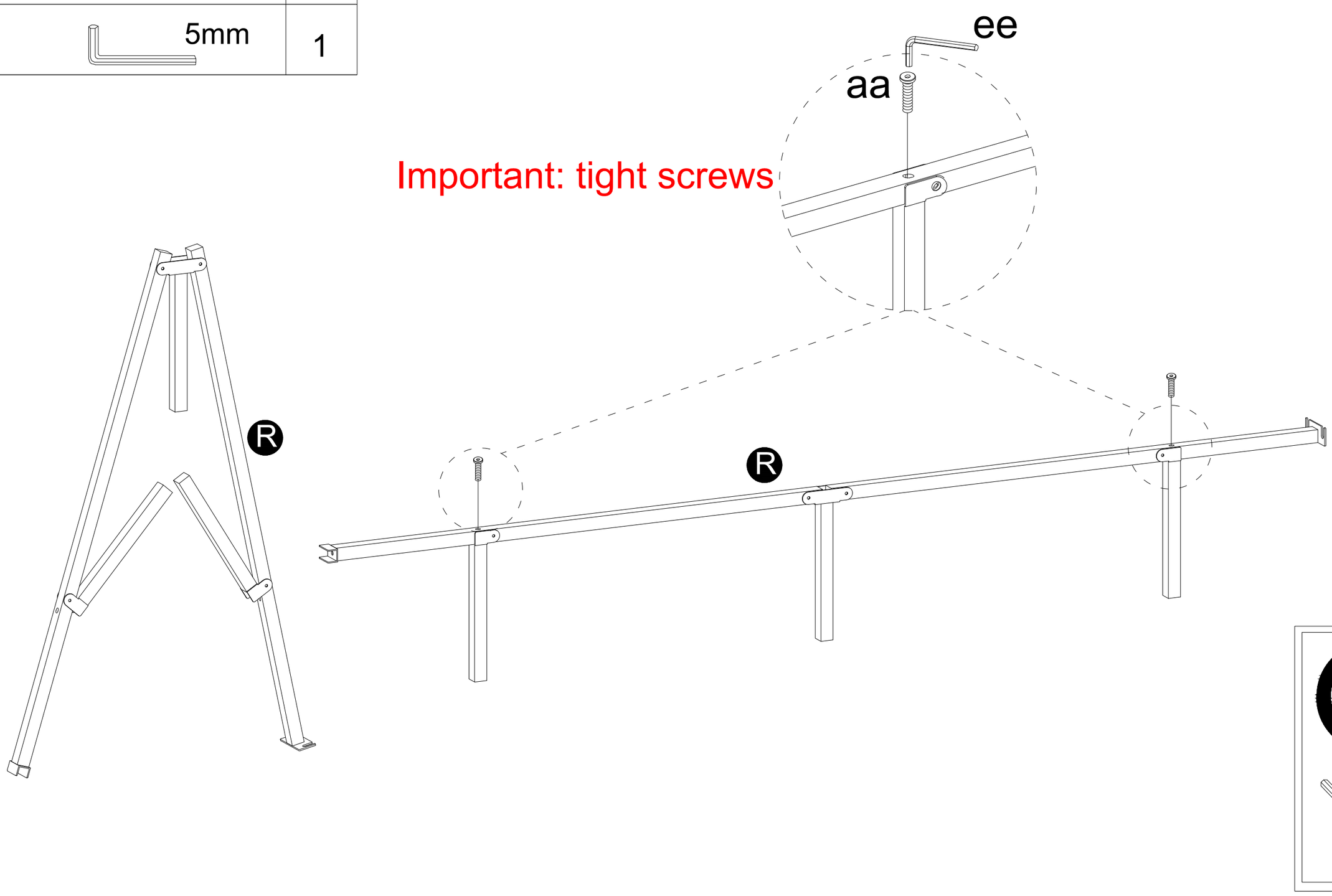

aa	M6x55	1
cc	M8x32	2
ee	5mm	1
ff		3

Step 3

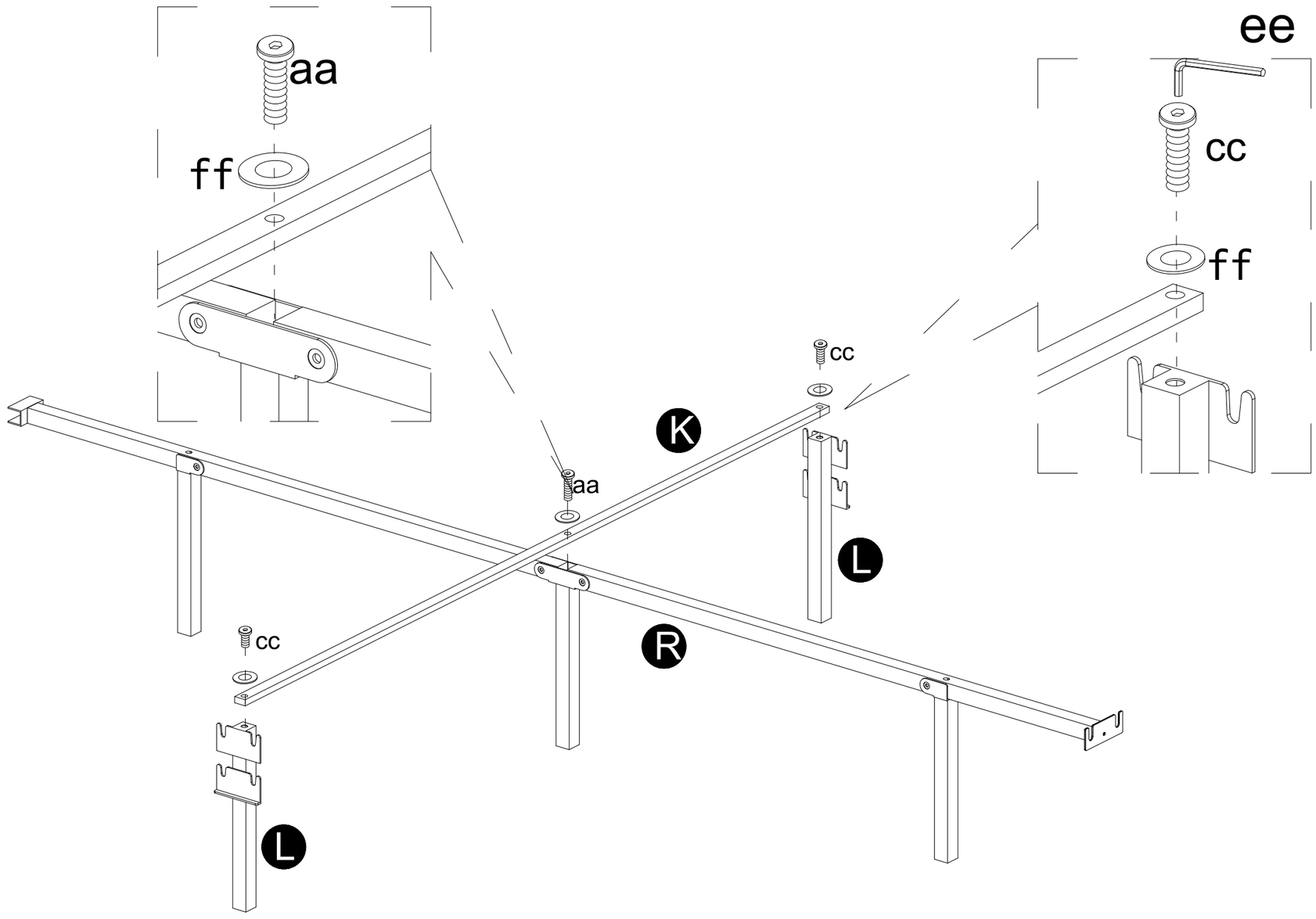

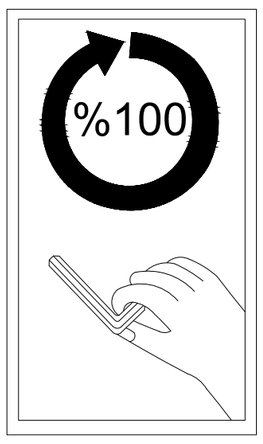

dd	M8x15	8
ee	5mm	1

Step 4

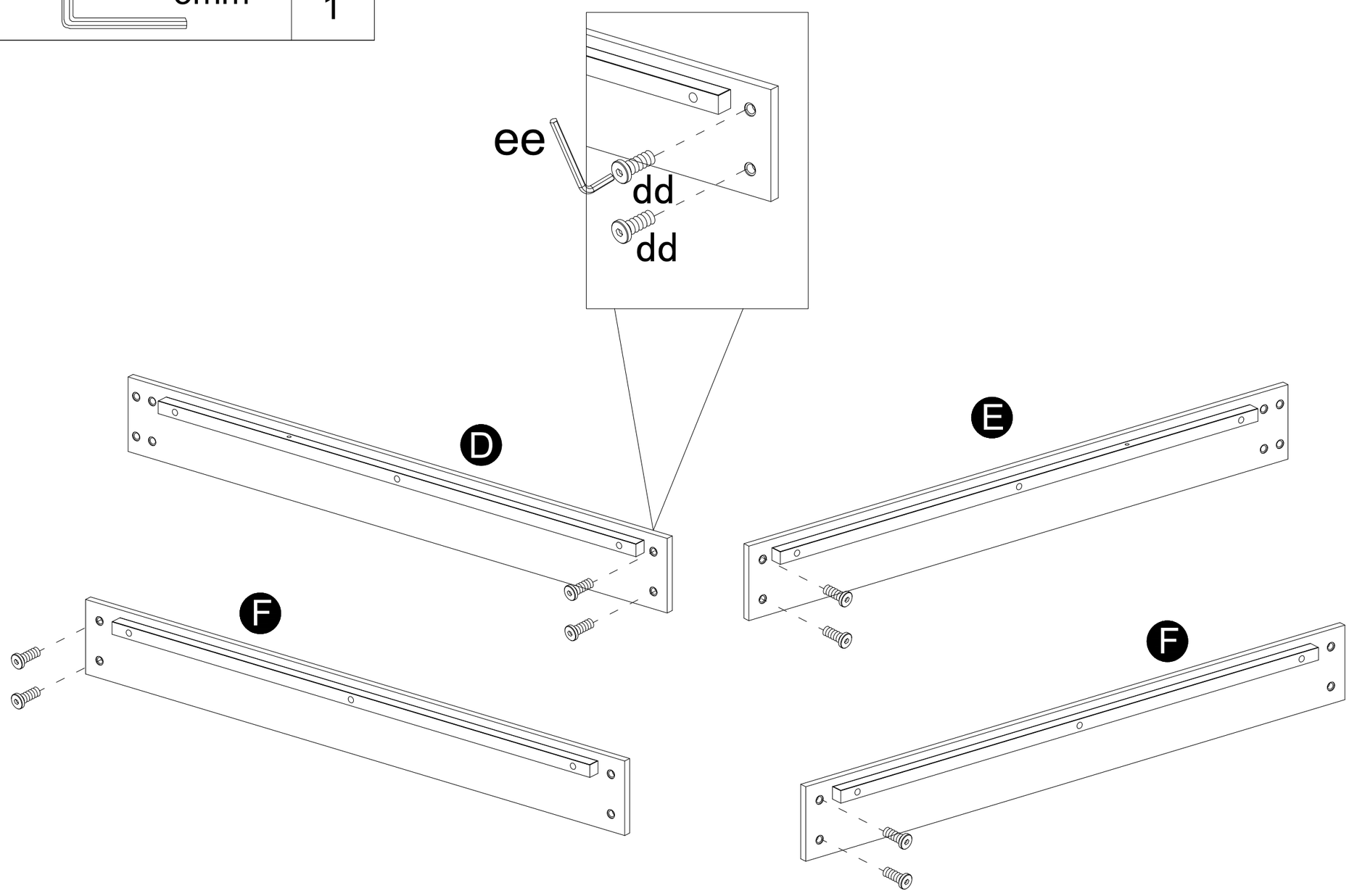

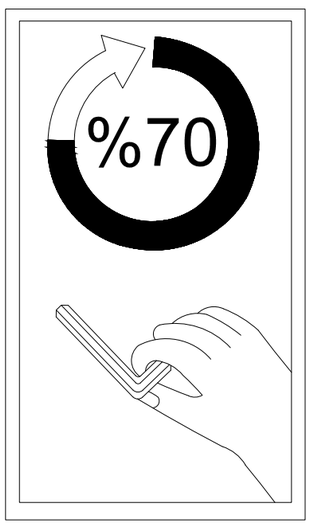

dd	M8x15	6
ee	5mm	1

Step 5

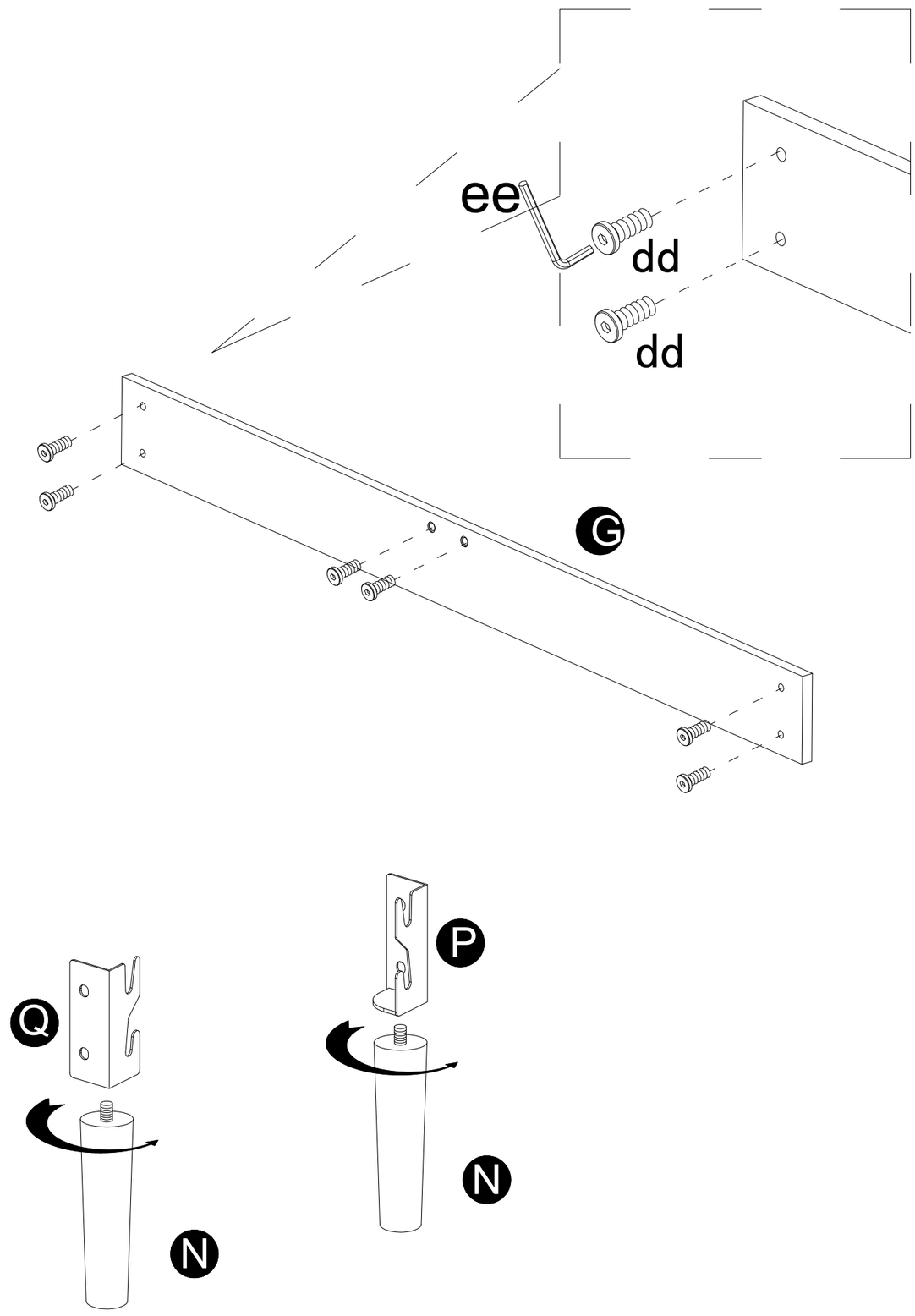

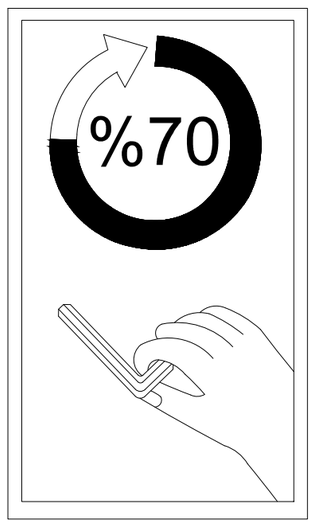

dd	M8x15	4
ee	5mm	1

Step 6

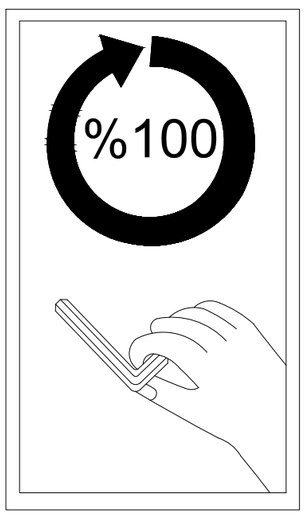

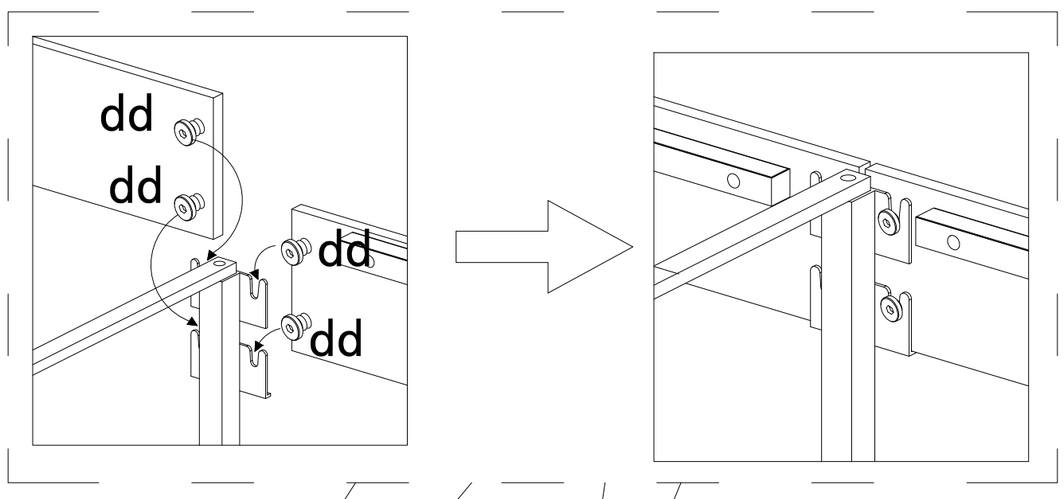

Release screws,put part together,then tight screws

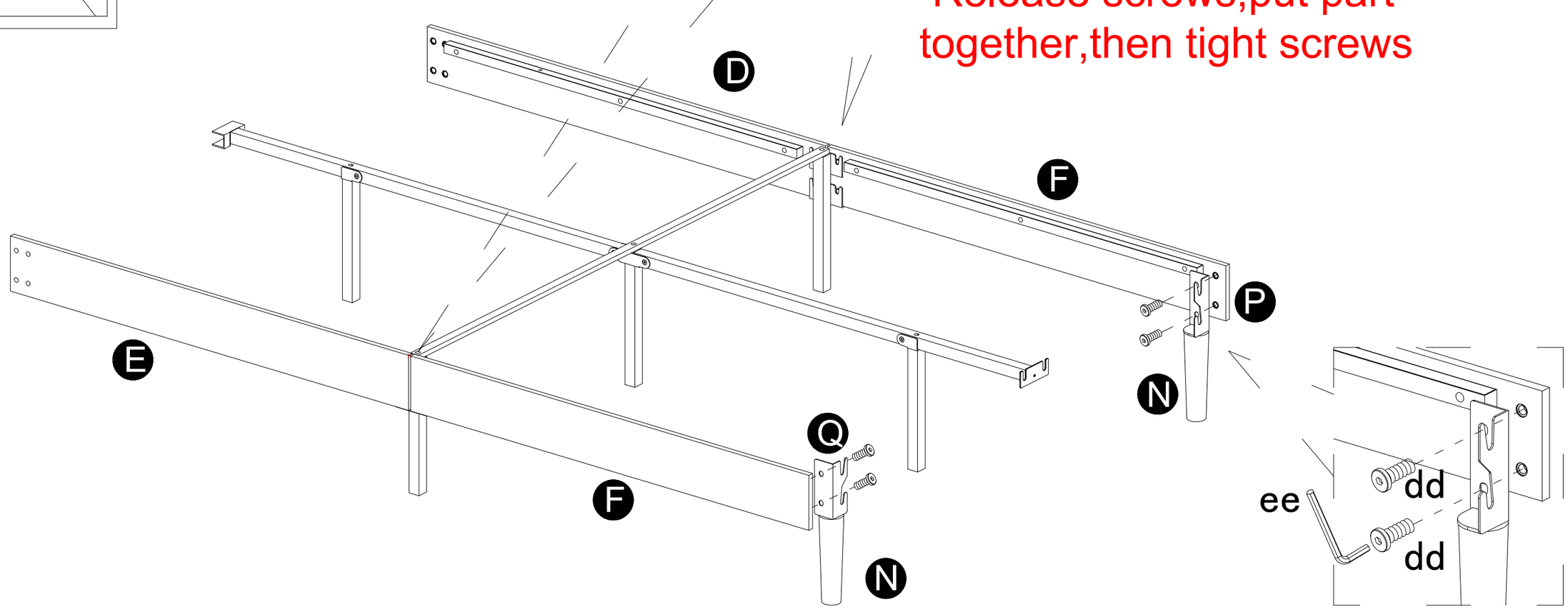

ee	5mm	1
cc	M8x32	8

Step 7

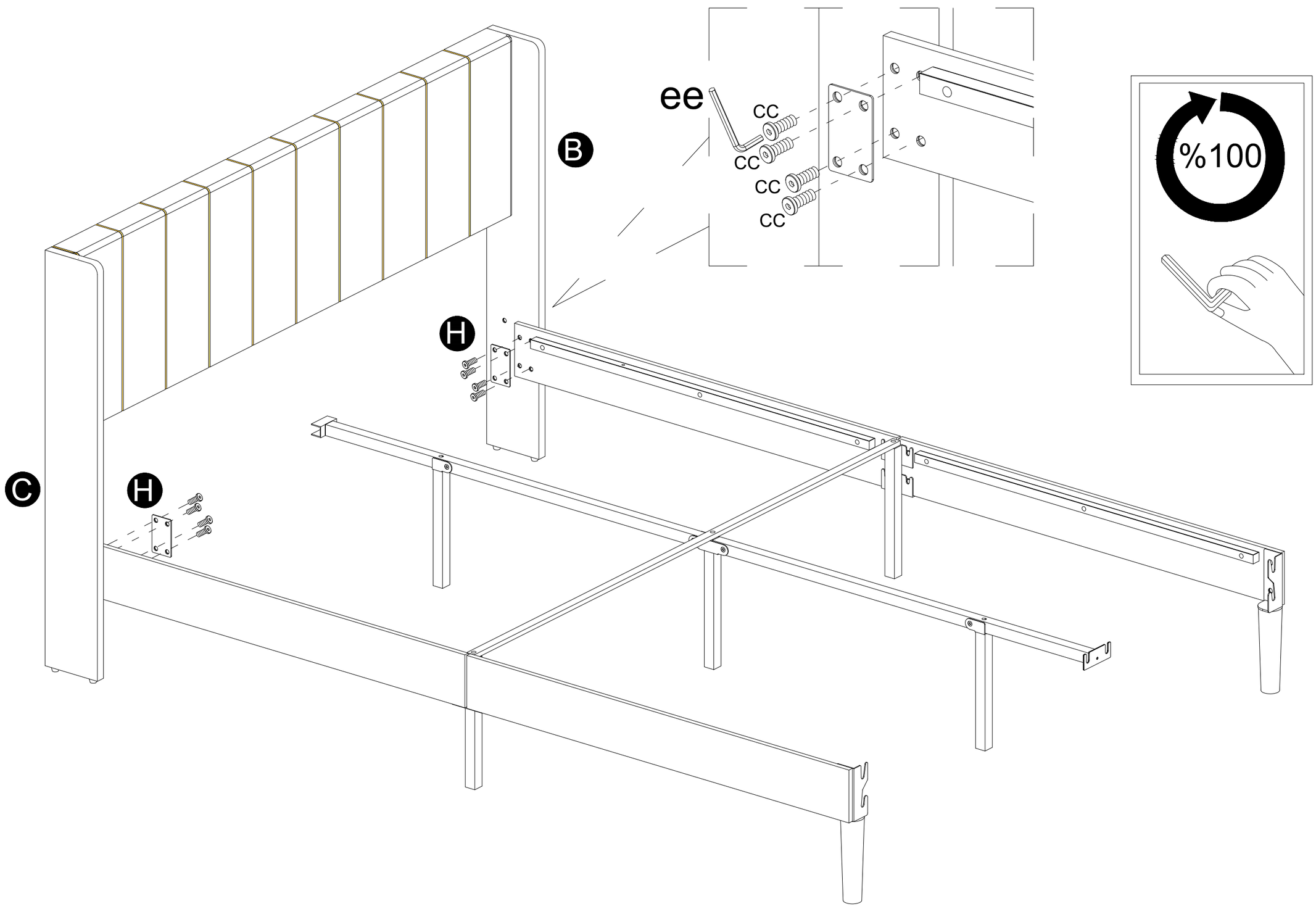

Step 8

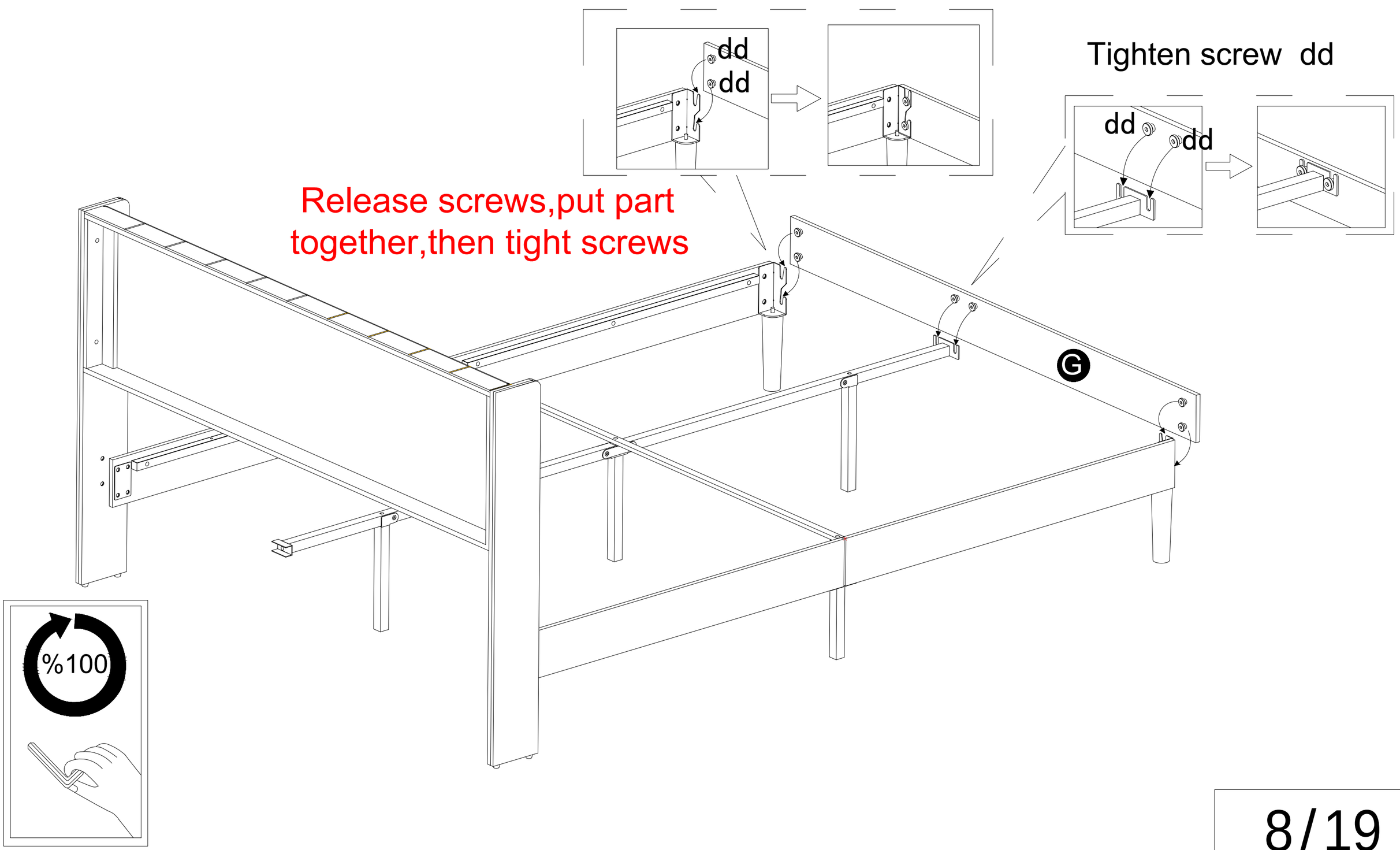

aa	M6x55	1
bb	M8x20	4
ee	5mm	1

Step 9

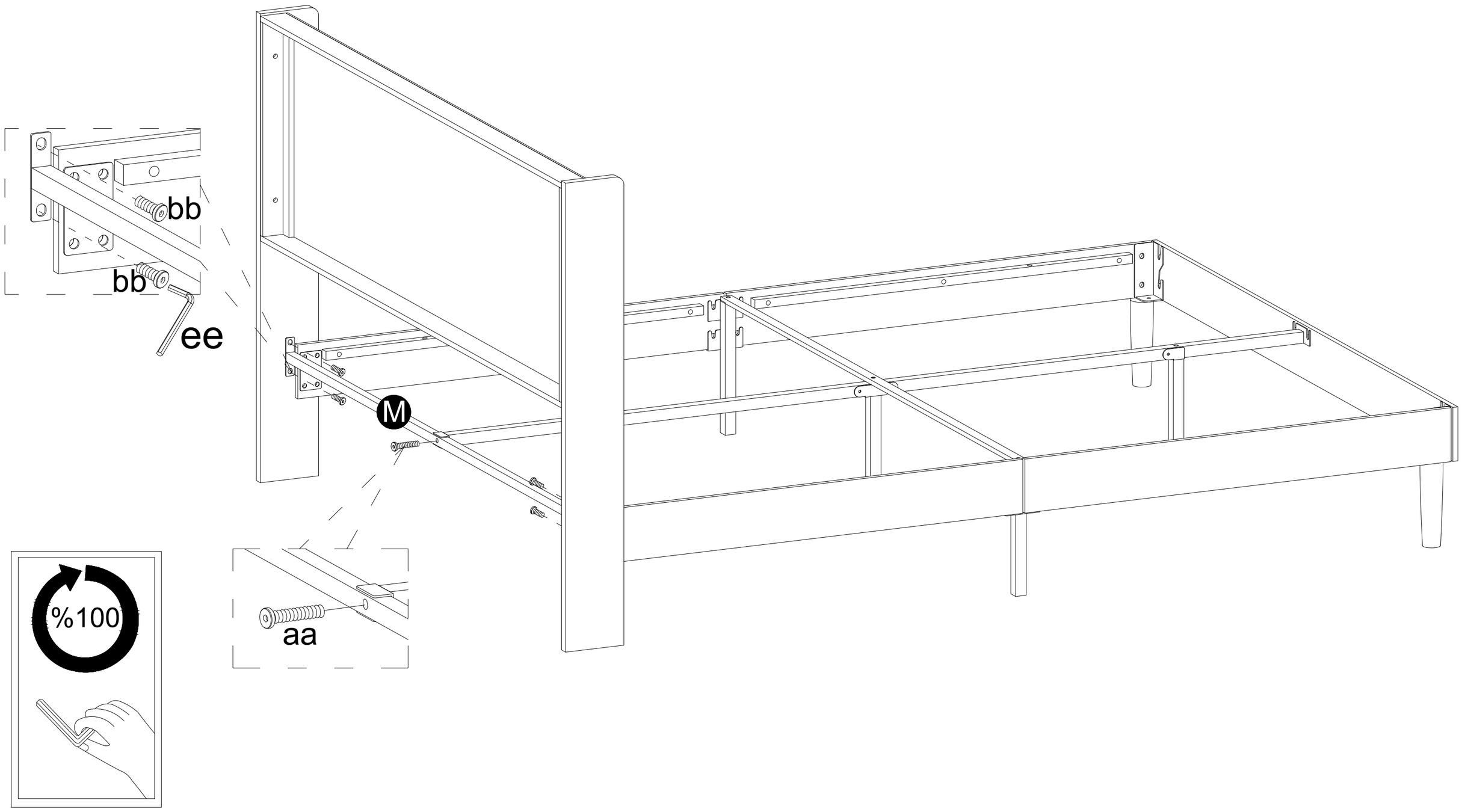

ii		1

Step 10

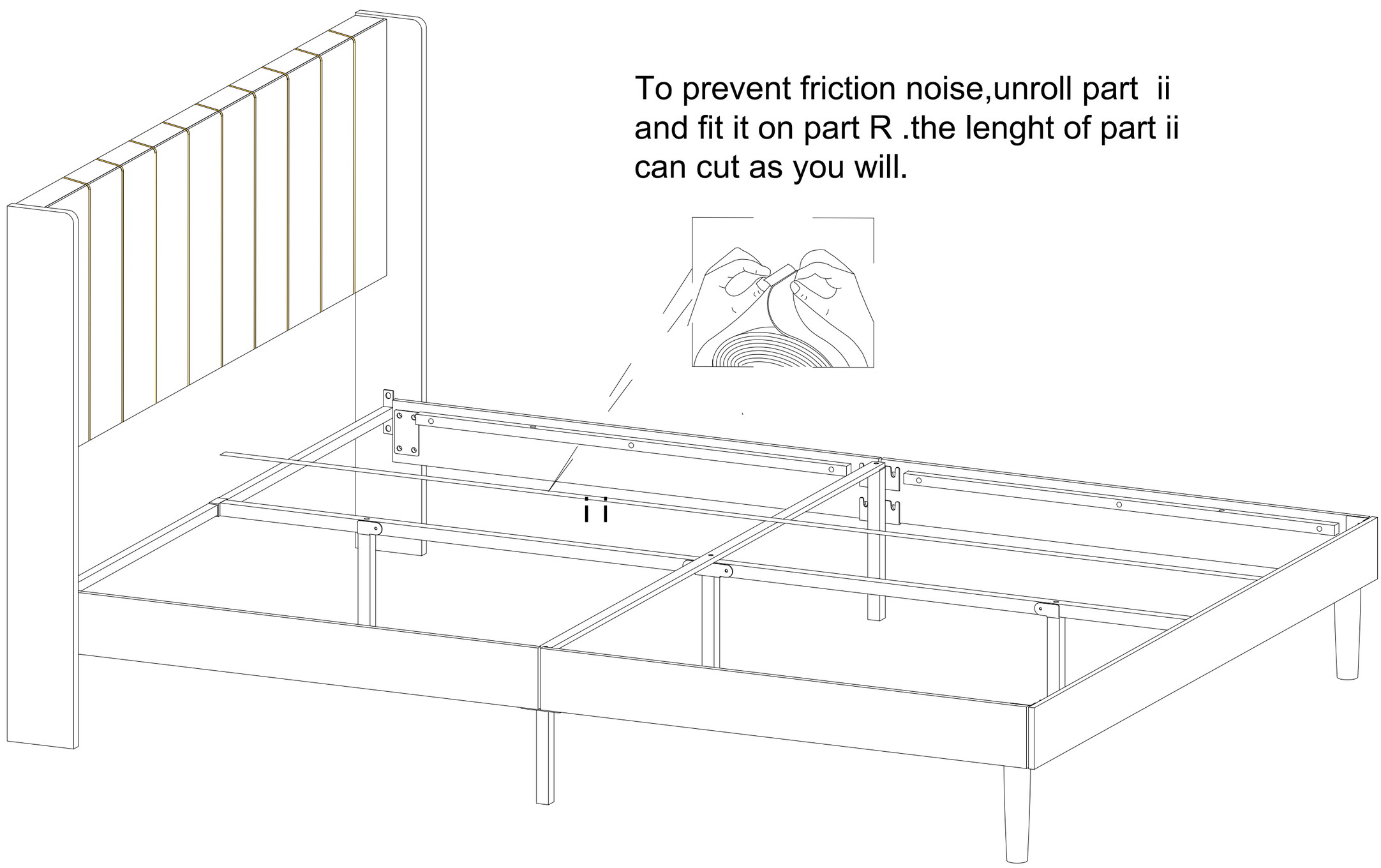

To prevent friction noise,unroll part ii and fit it on part R .the lenght of part ii can cut as you will.

Step 11

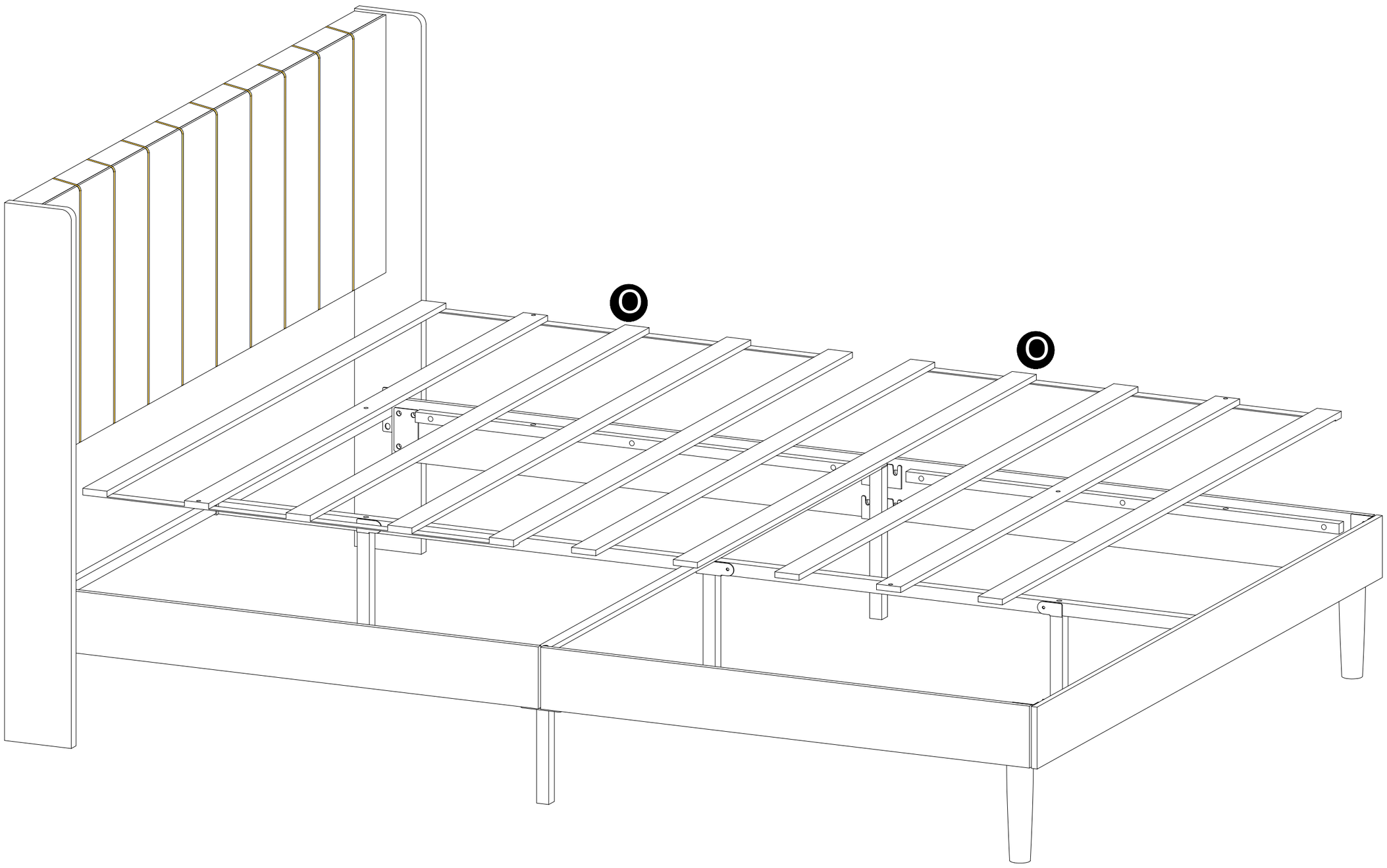

Step 12

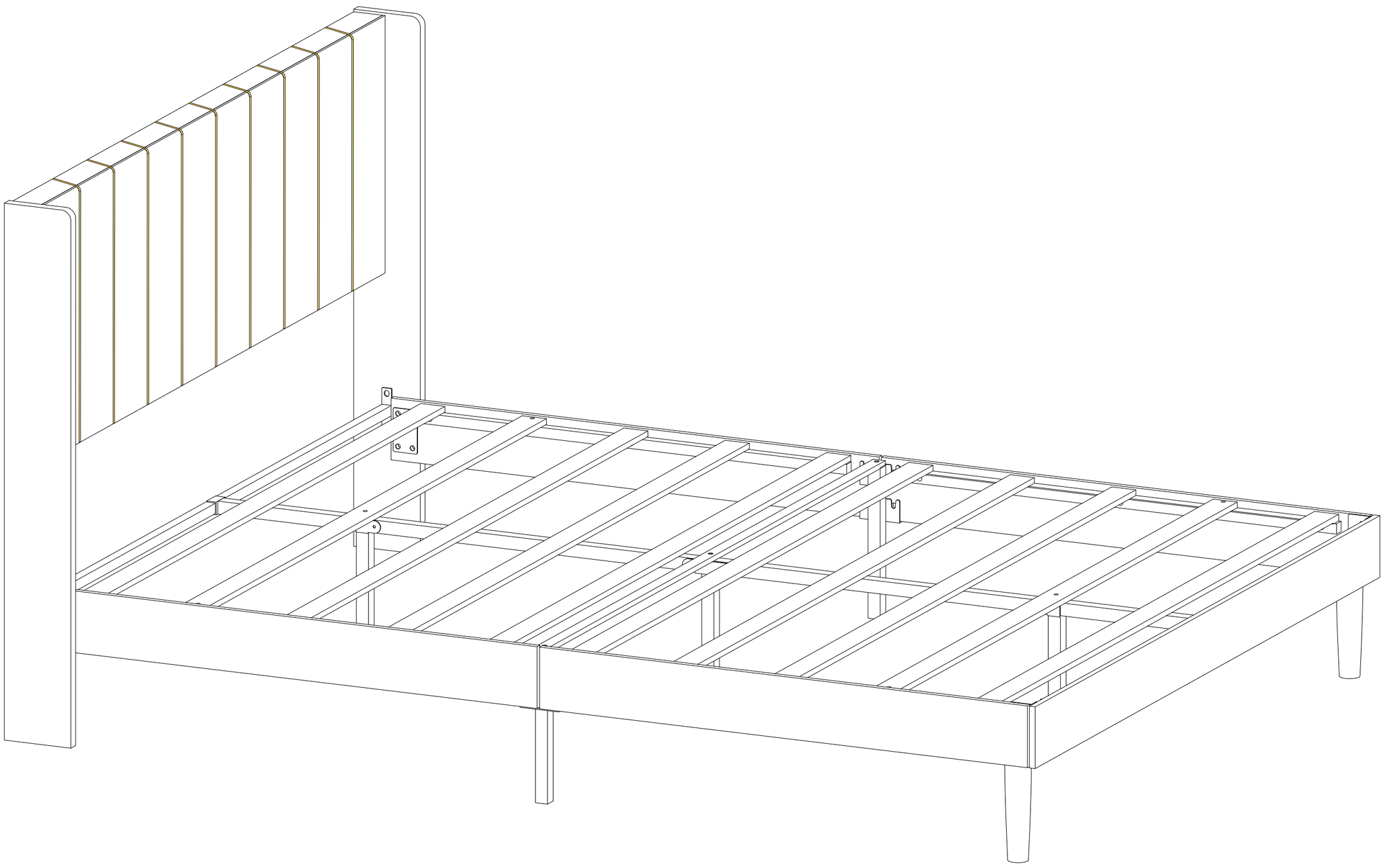

ASSEMBLY INSTRUCTION

MODEL NUMBER:903-1K

NOTES:

- Do not skip any step.
- Do not fully tight screws until all the bed parts are assembled.

WARNING:

- WARNIND FOR YOUNG CHILDREN-This product contains small components,please ensure that they are kept away from small children while assembling.

Warranty Information:

- We warranty this product to be free from defects in materials.If u have any query about bed,pls contact our after -sale support email: Pakkahome@outlook.com

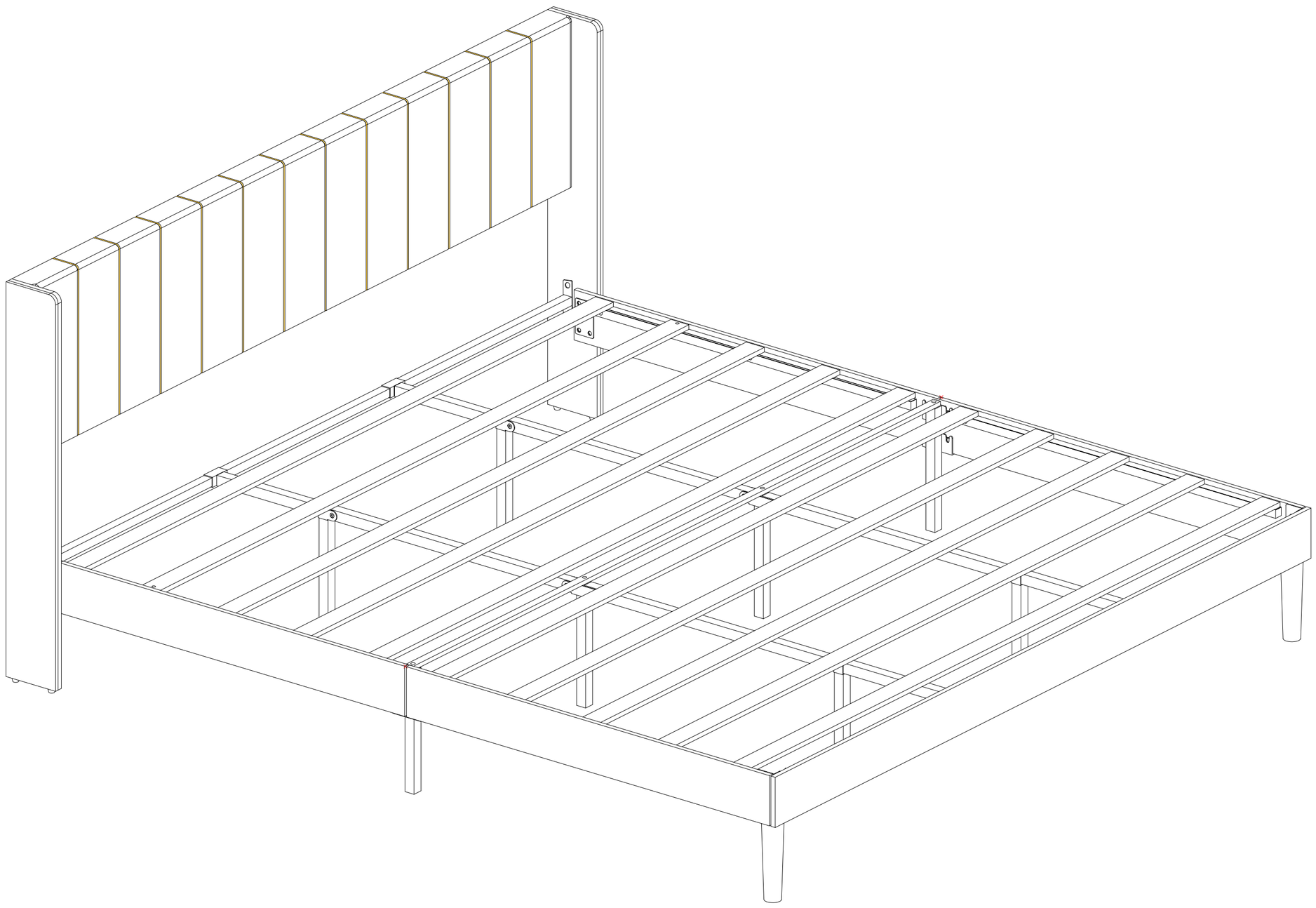

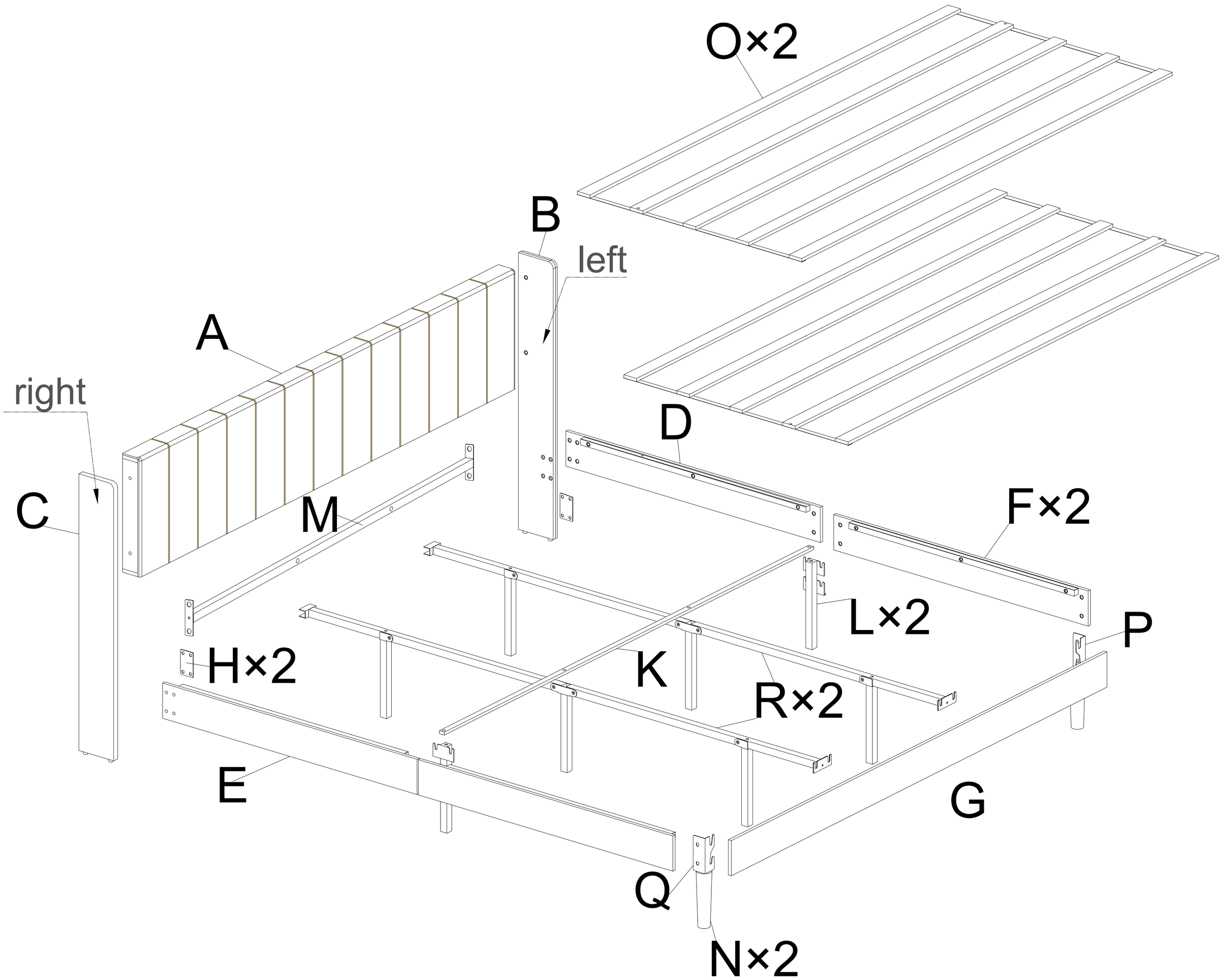
O×2
B
left
A
right
D
C
M
F×2
L×2
P
H×2
K
R×2
E
G
Q
N×2

A	1PC
B	left 1PC
C	right 1PC
D	1PC
E	1PC
F	2PCS
G	1PC
H	2PCS
K	1PC
L	2PCS
M	1PC
N	2PCS
O	2PCS
P	1PC
Q	1PC
R	2PCS

aa	M6*55	8
bb	M8x20	4
cc	M8x32	14
dd	M8x15	20
ee	5mm	1
ff		8
ii		2

SPARE

aa		1
bb		1
cc		1
dd		1
ff		1

cc	M8x32	4
ee	5mm	1
ff		4

Step 1

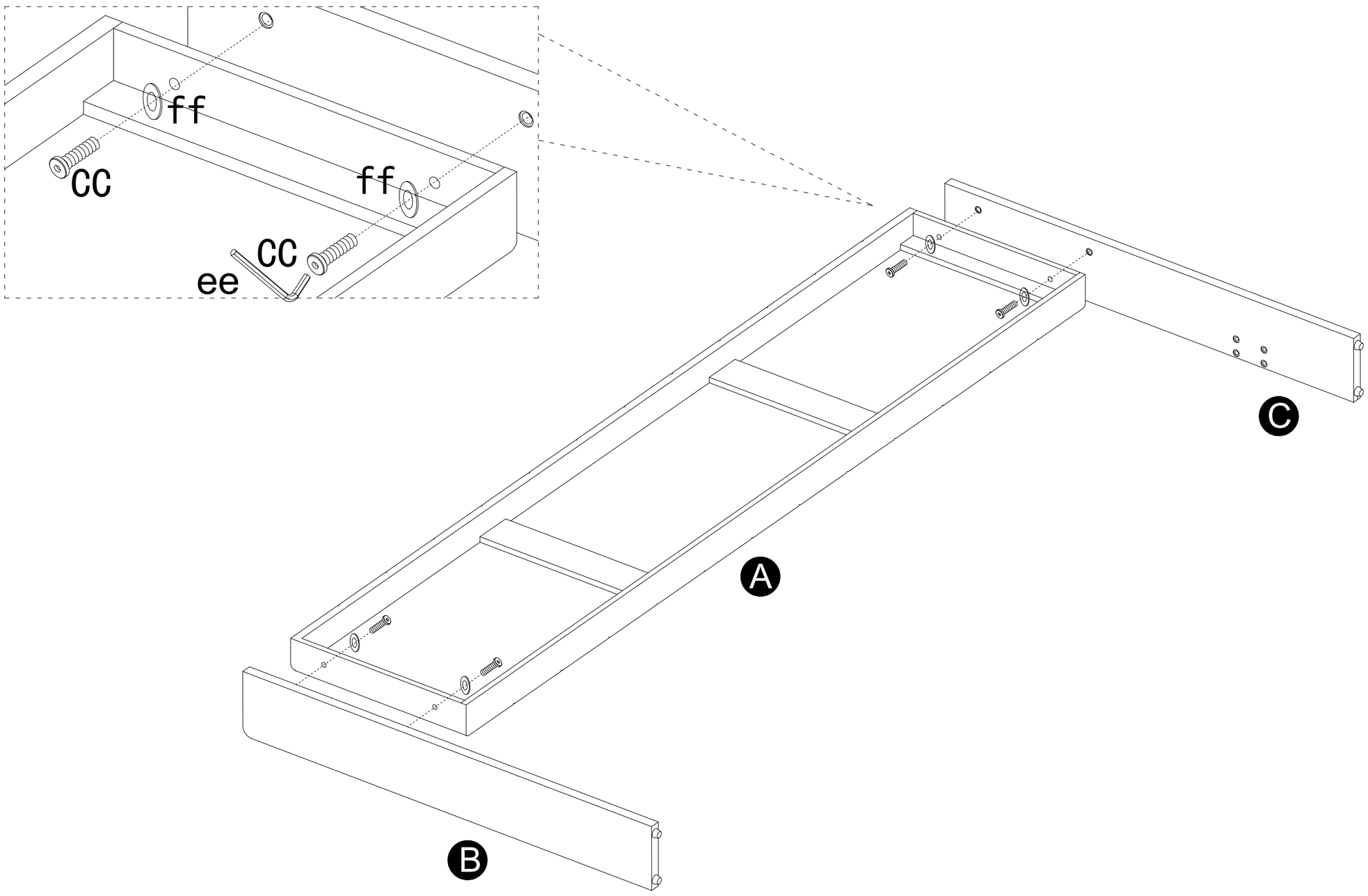

aa	M6x55	4
ee	5mm	1

Step 2

Important: tight screws

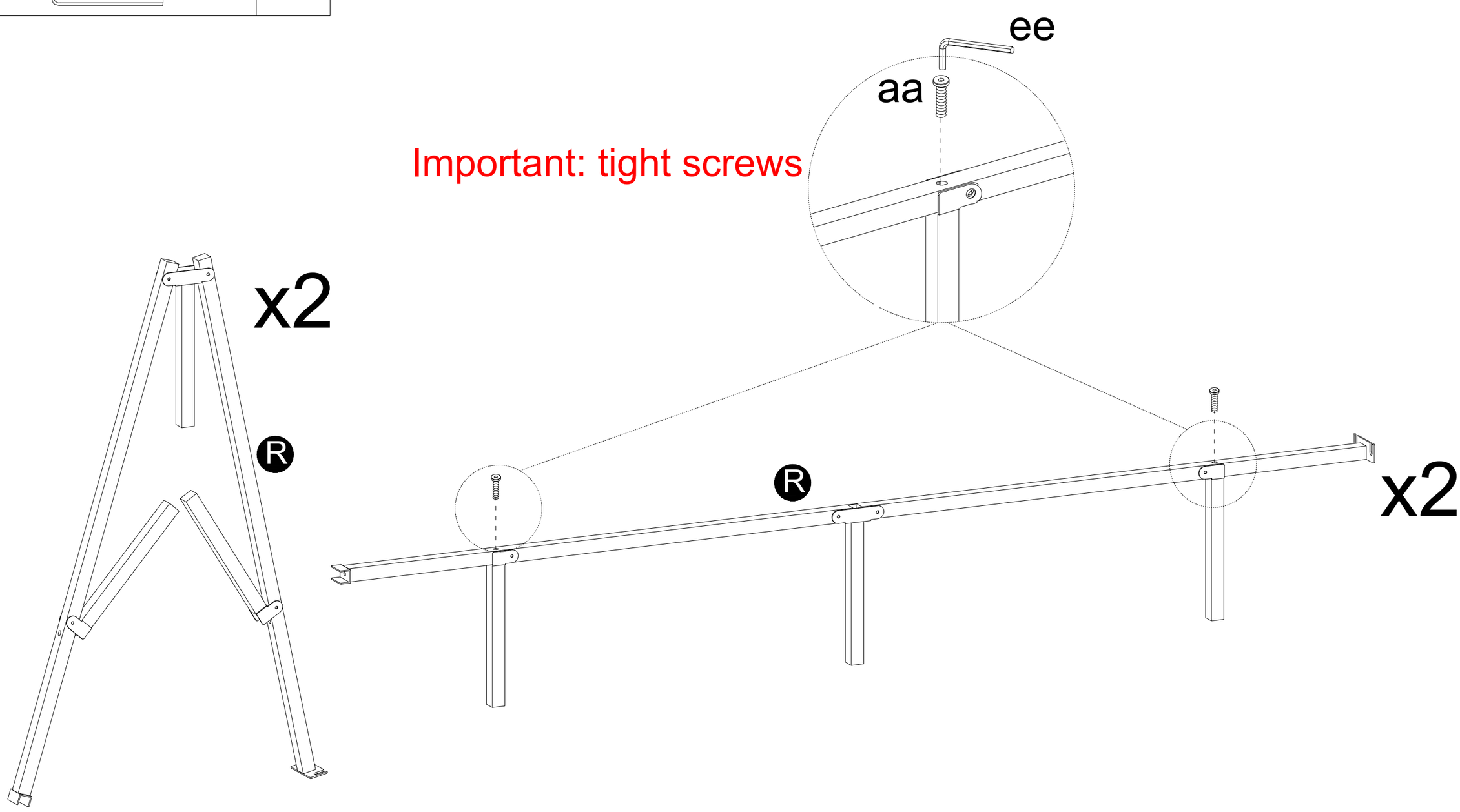

aa	M6x55	2
cc	M8x32	2
ee	5mm	1
ff		4

Step 3

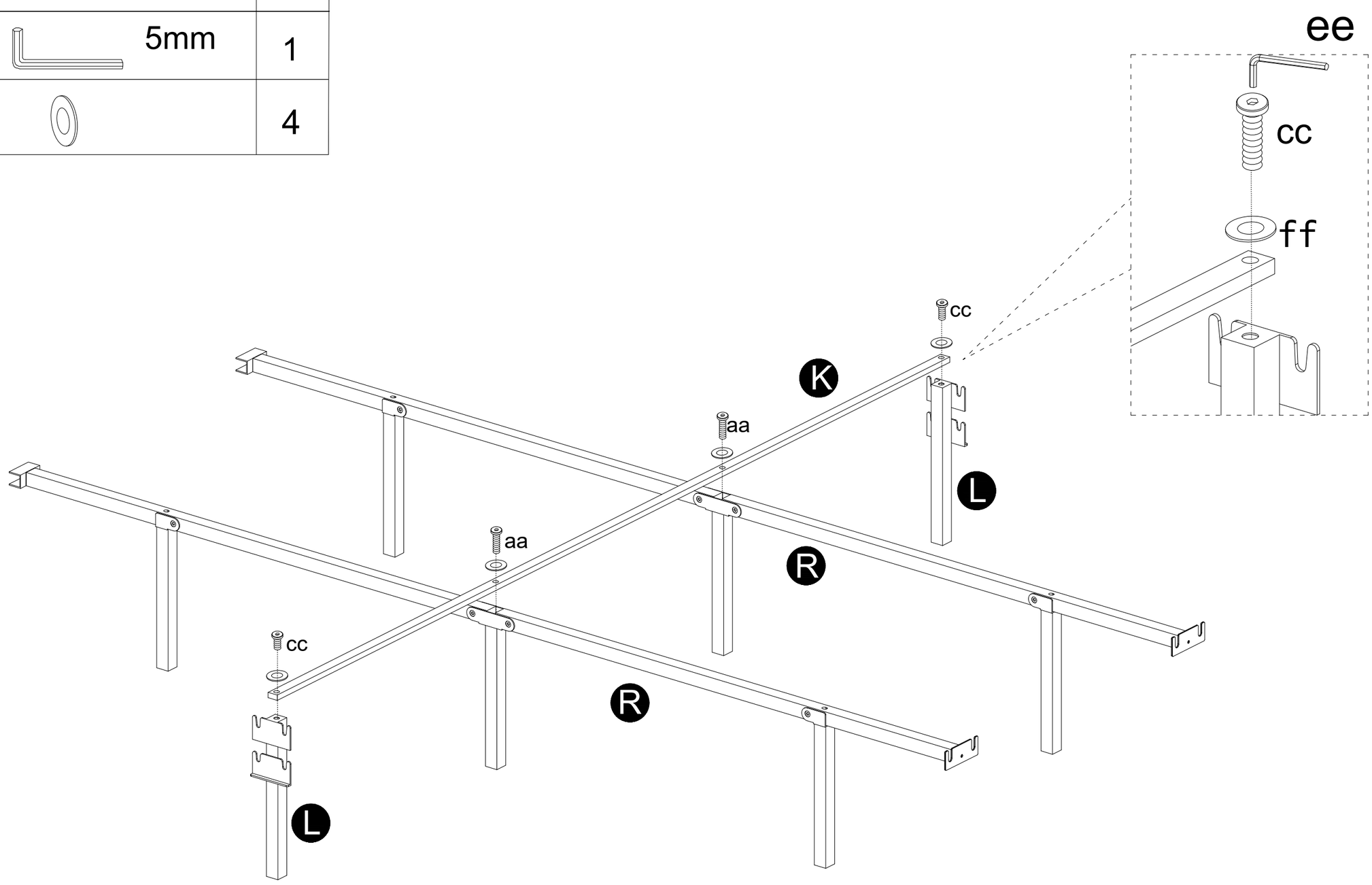

dd	M8x15	8
ee	5mm	1

Step 4

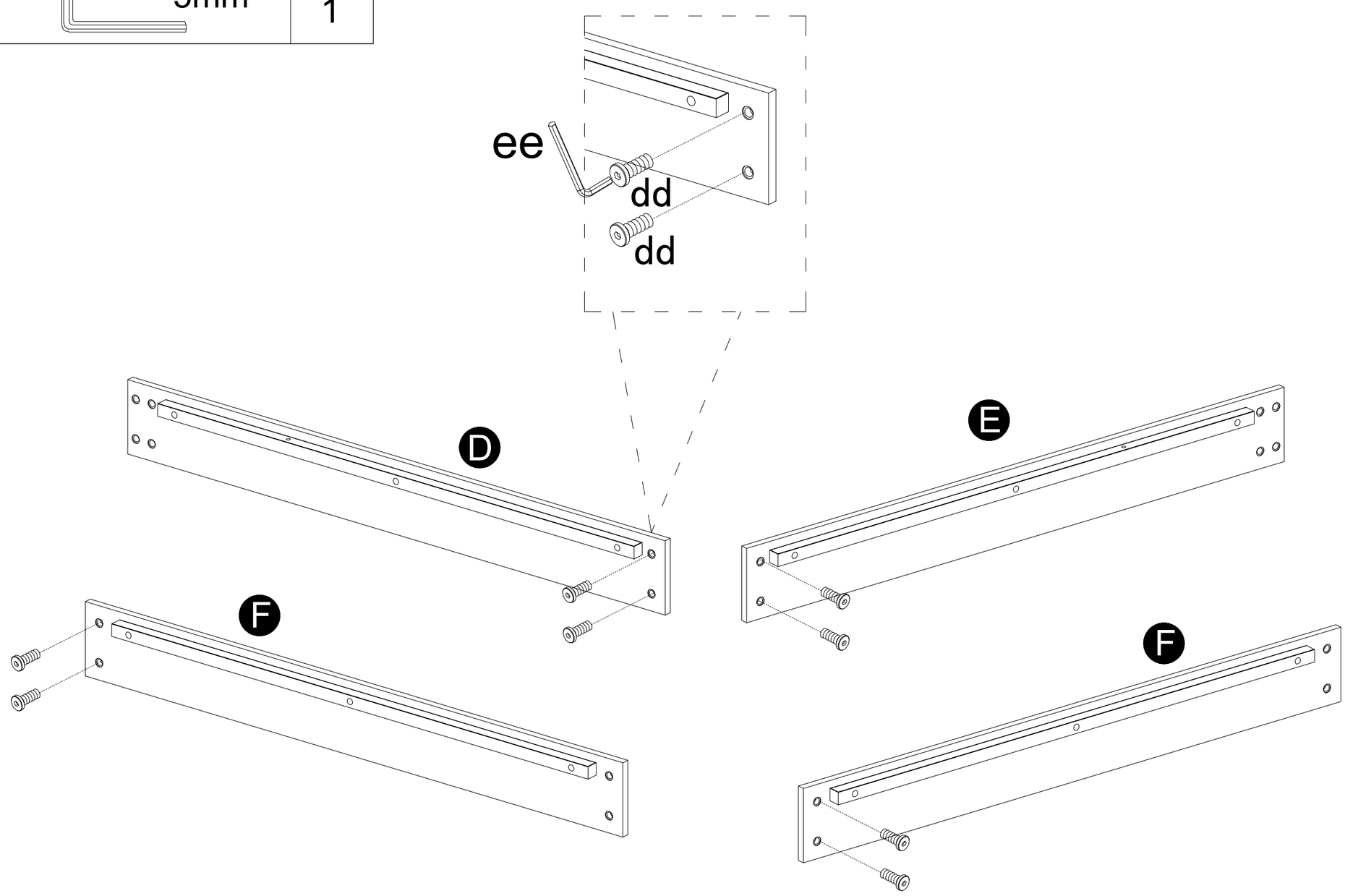

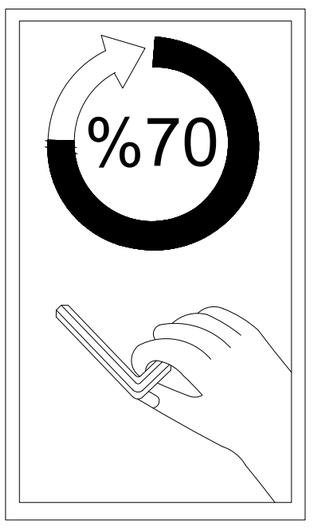

dd	M8x15	8
ee	5mm	1

Step 5

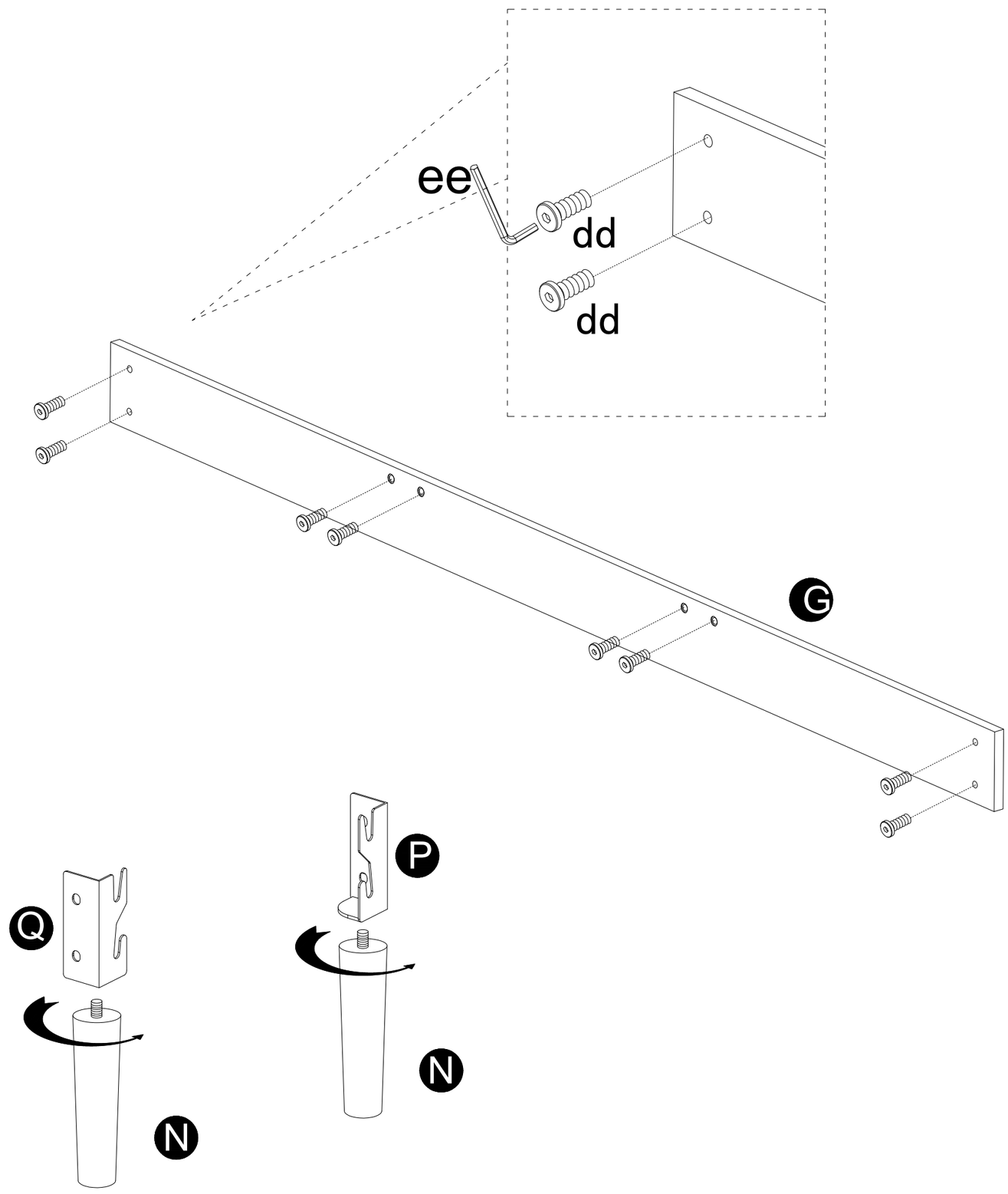

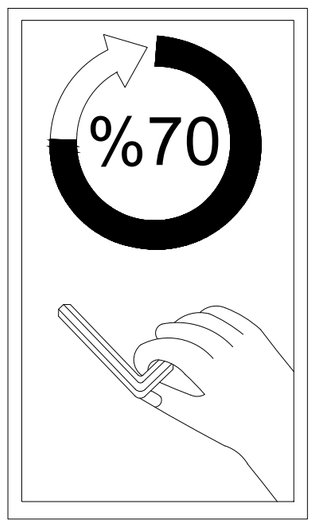

dd	M8x15	4
ee	5mm	1

Step 6

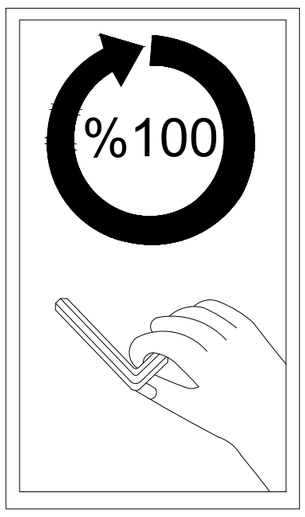

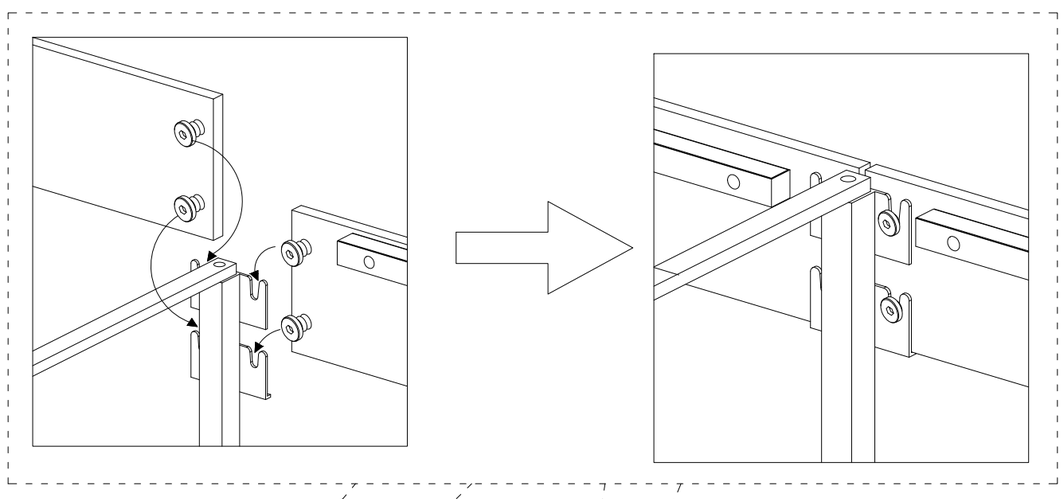

Release screws,put part together,then tight screws

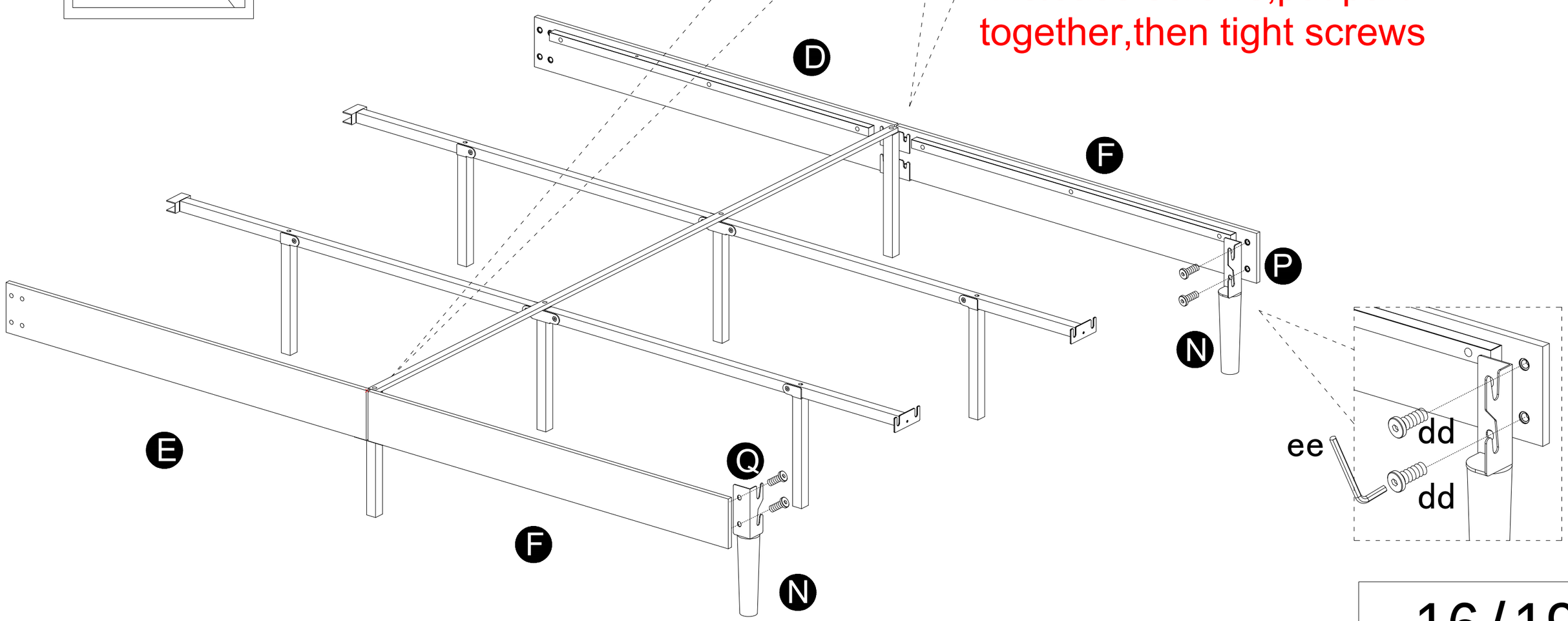

ee	5mm	1
cc	M8x32	8

Step 7

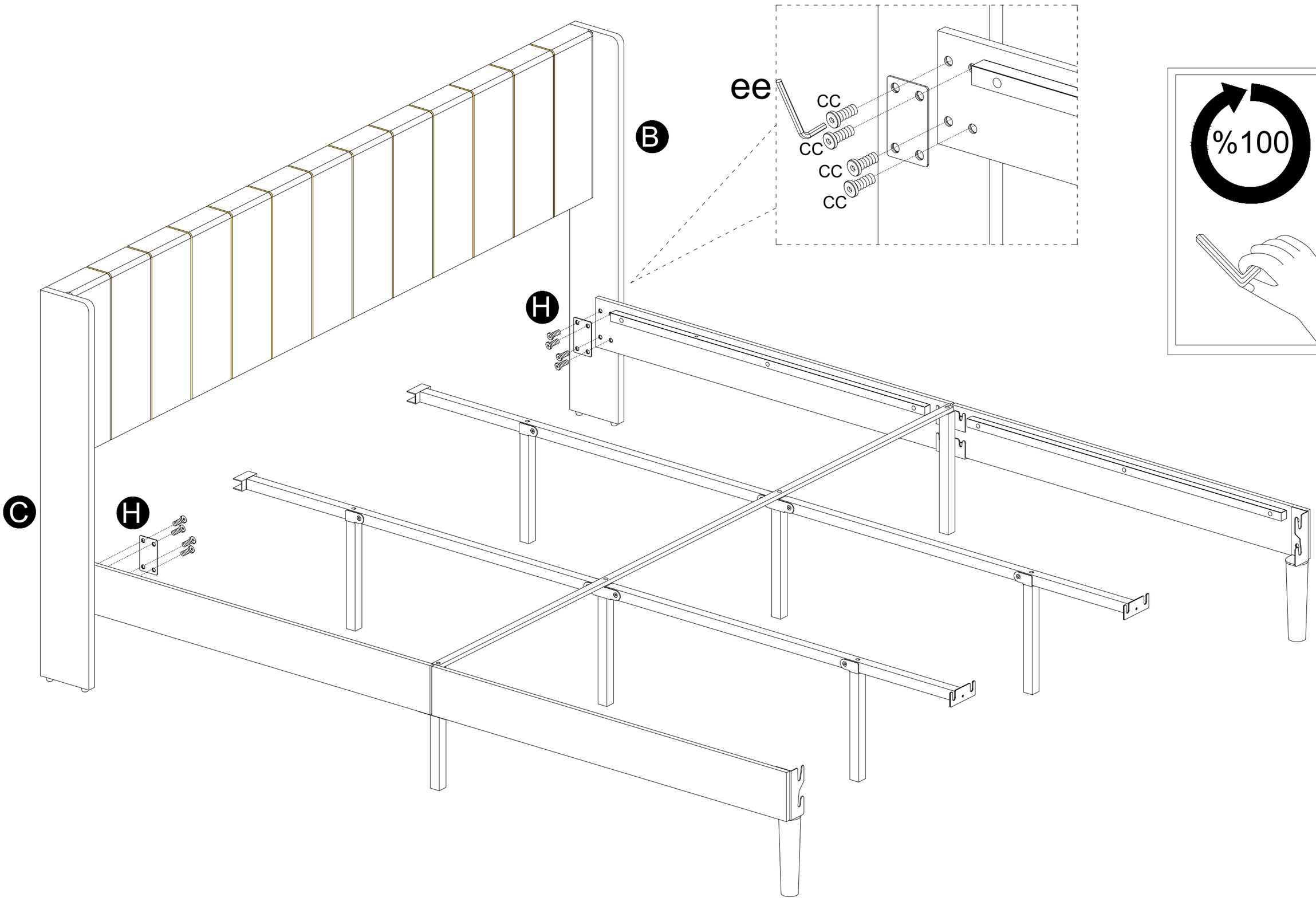

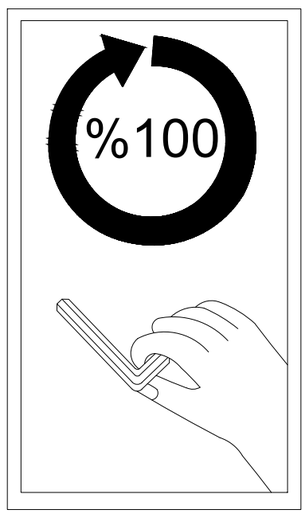

Step 8

1.Tighten screw dd

Release screws,put part together,then tight screws

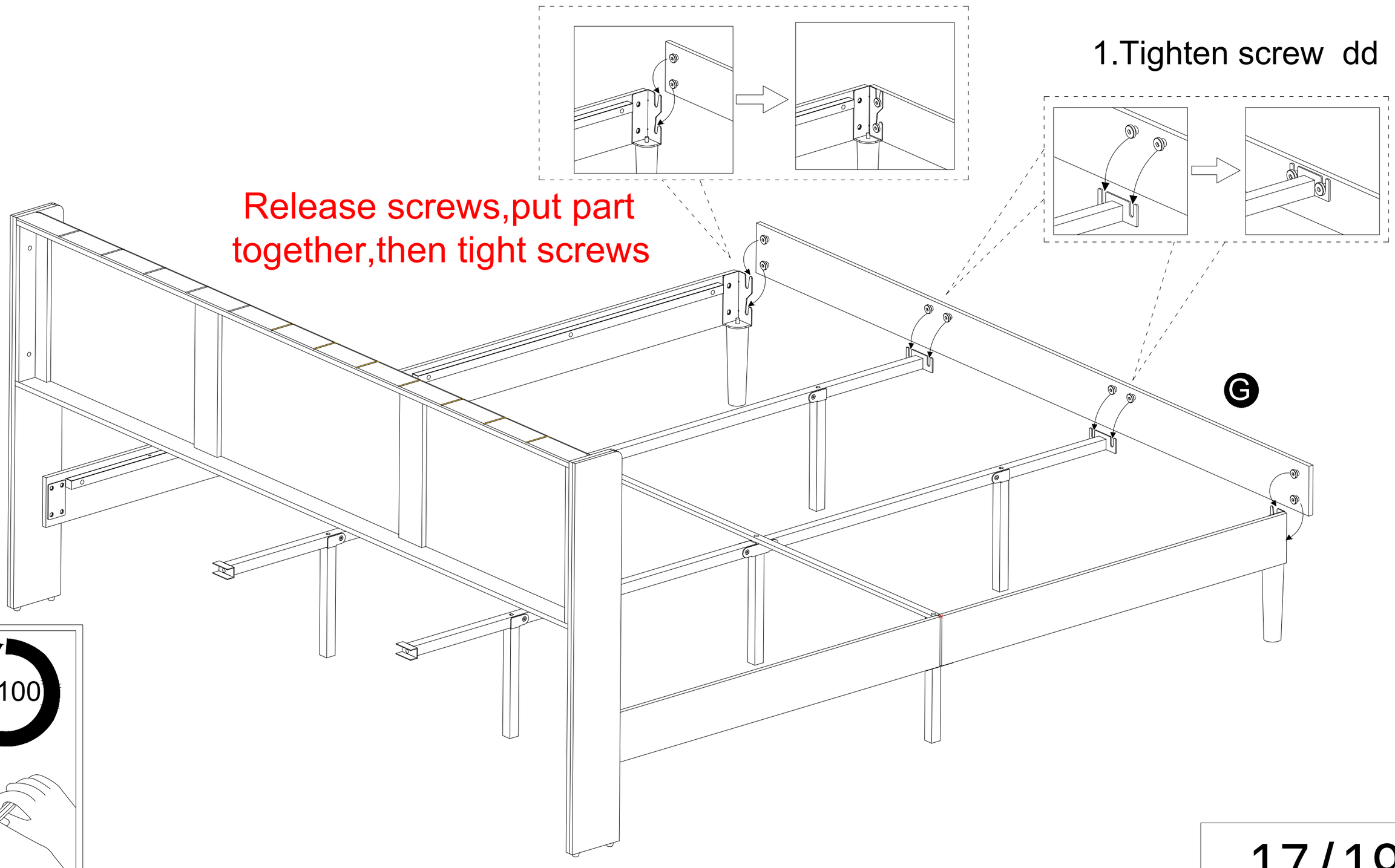

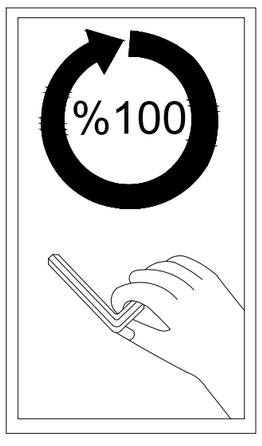

aa	M6x55	2
bb	M8x20	4
ee	5mm	1

Step 9

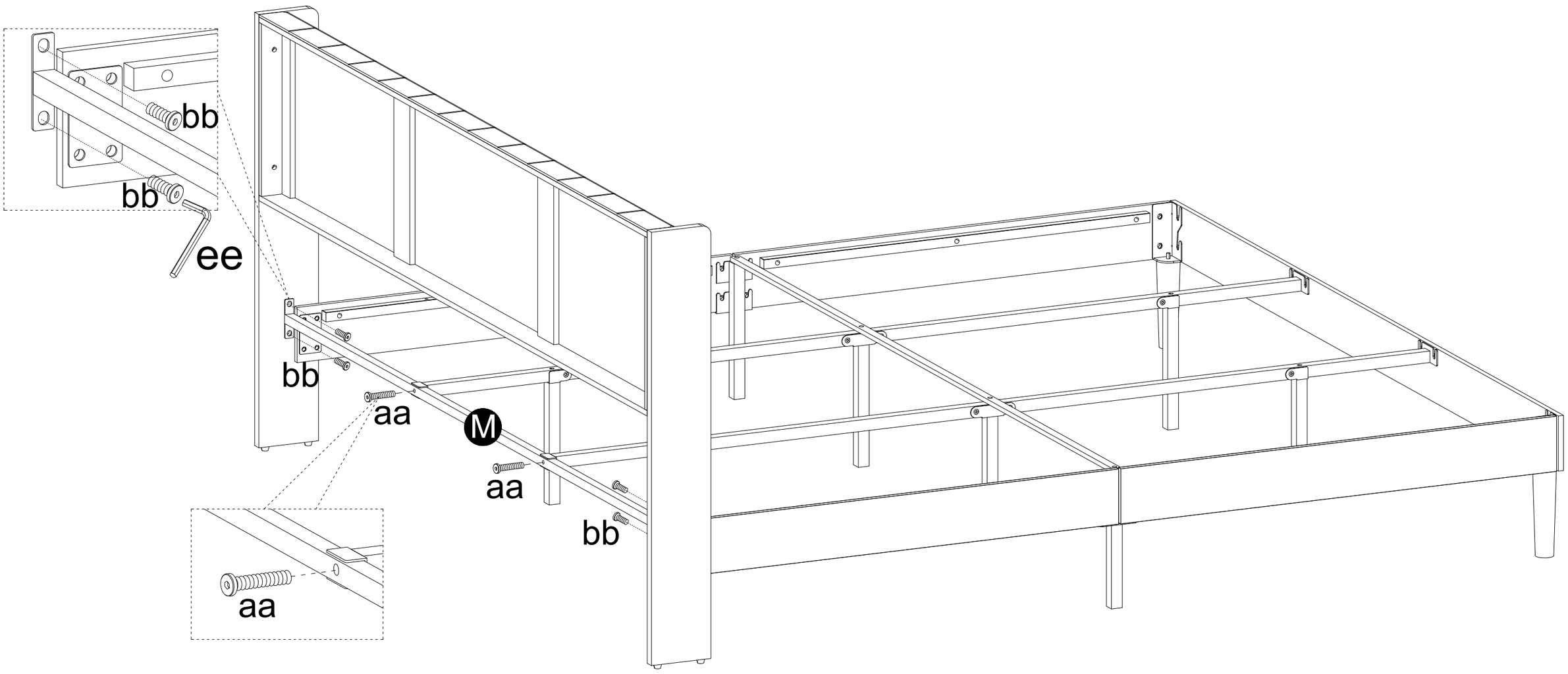

ii		2

To prevent friction noise,unroll part ii and fit it on part R .the lenght of part ii can cut as you will.

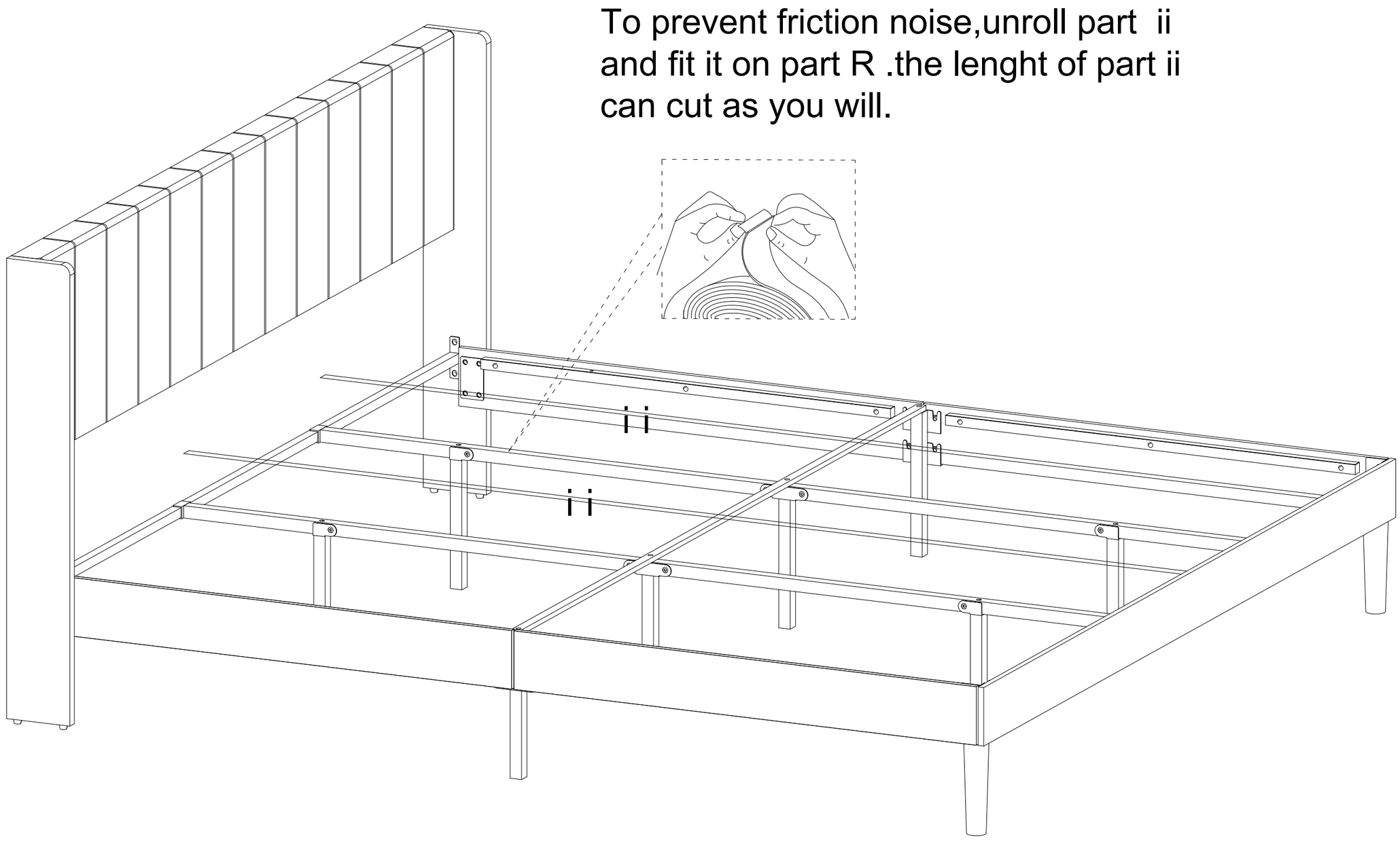

Step 11

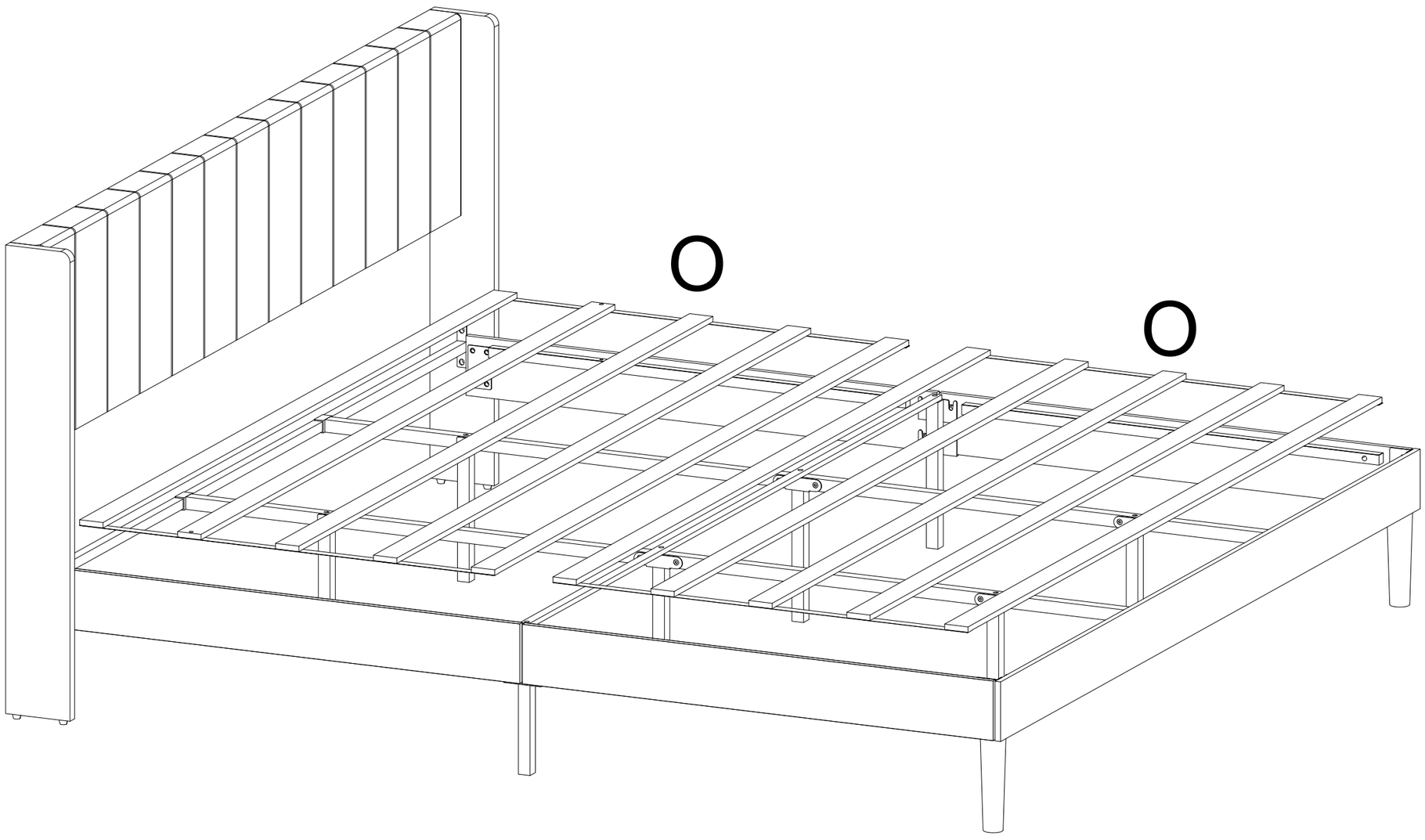
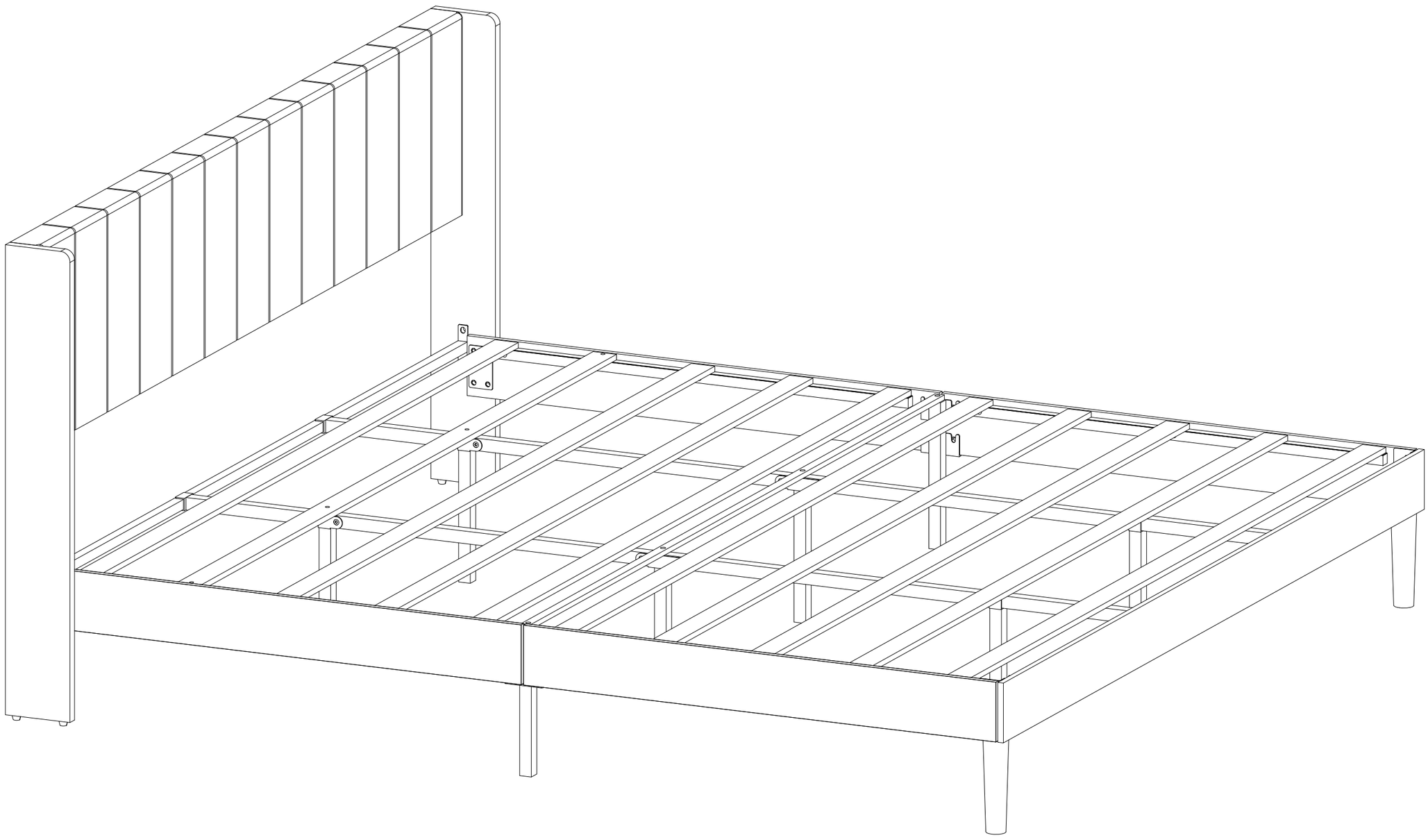
Step 12