INSTALLATION INSTRUCTION

Table of Contents

Points to Note--------page1

Installation accessories and installation exploded diagram---------page2

Metal Louge chair installation------page3-4

Metal Louge chair with Ottoman installation------page5-7

WARNING

-To avoid the risk of suffocation and foreign-body ingestion, keep children under three years old and pets away from plastic bags and small parts during assembly. Please dispose of the packaging materials correctly before use.
- Before sit on the seat, ensure it has been well settled and securely positioned.
- DO NOT leave children unattended on or beside the chair.
- DO NOT use the chair as a step stool.
- DO NOT sit on the edge of the seat, armrests or the backrest as this could make the chair tip over.
- Requires 2 people for ease of assembly!
- The chair can bear a weight of 227kg/500lbs. Sitting on the footstool is prohibited

WARRANTY

-We offer every customer every chair 1-year warranty.
-Any questions or advice, welcome to contact us every email will receive a satisfied & prompt response.

CARE & MAINTENANCE

-Do not wash, bleach, tumble dry,iron,dry clean.
-Vacuum clean.
-Wipe clean with a damp cloth.
-To prevent fading, keep fabric out of direct sunlight.

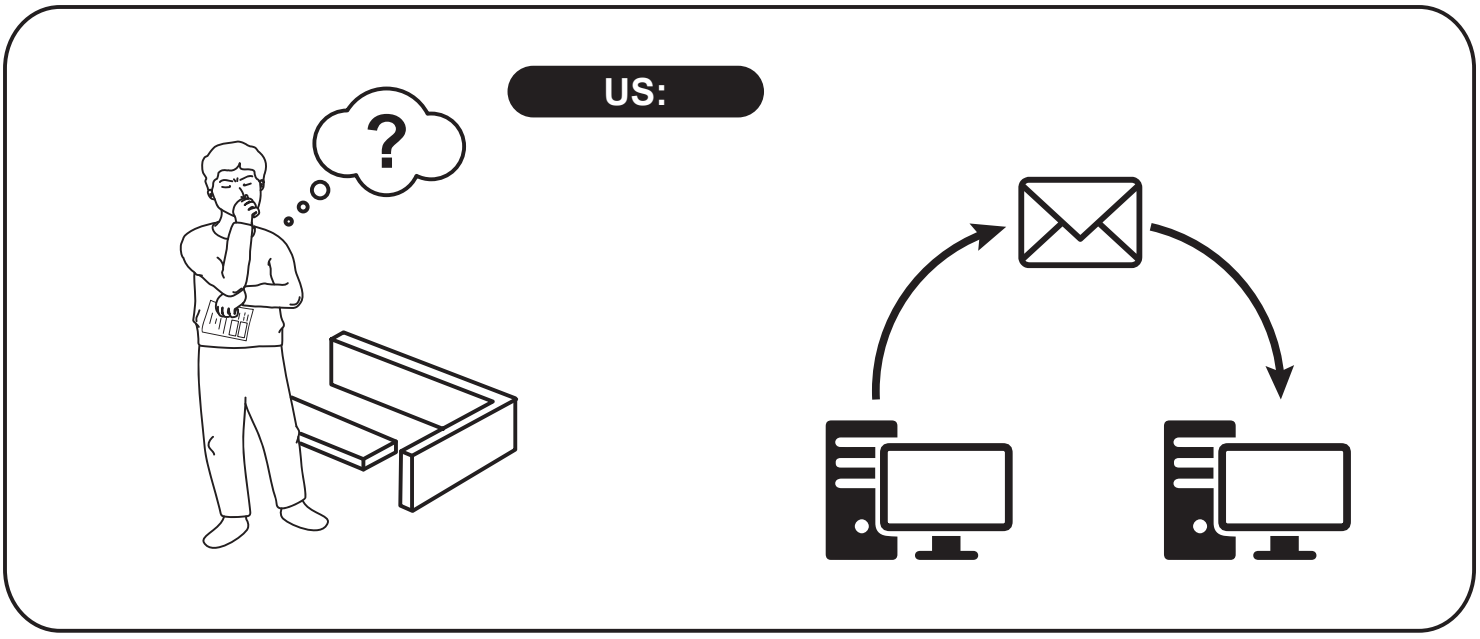

Assembly Instruction Manual

A 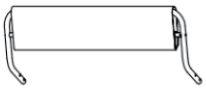 Head Frame with cloth×1	B 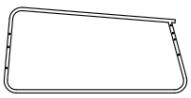 Upright Frame×2	C  Strengthened Link Tube×1	D  Link Tube×3	E  Bolt×12+1
F  Flange Nut×4+1	G  Washer×4+1	H  Allen Wrench×1	I  Flat Wrench×1	J  M8*40 full-tooth inner hexagon×4+1
K  footstool frames×2	L  mesh fabric for footstool ×1	M  footstool connecting tubes×2		

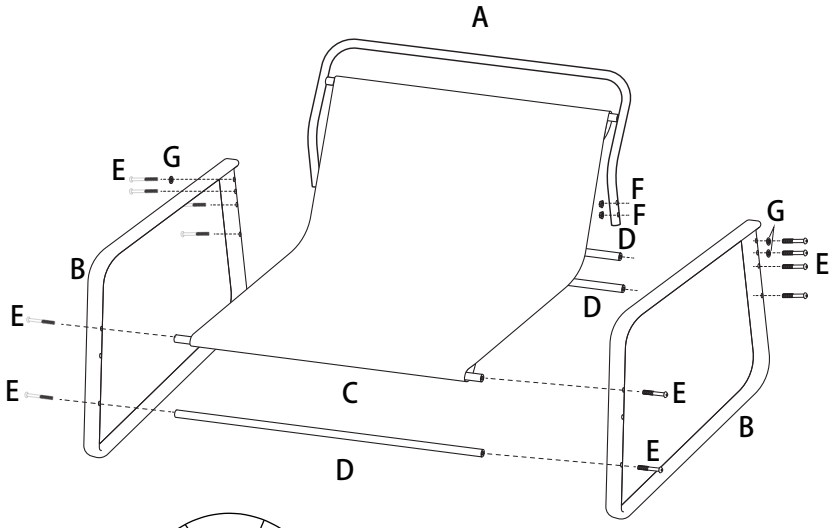

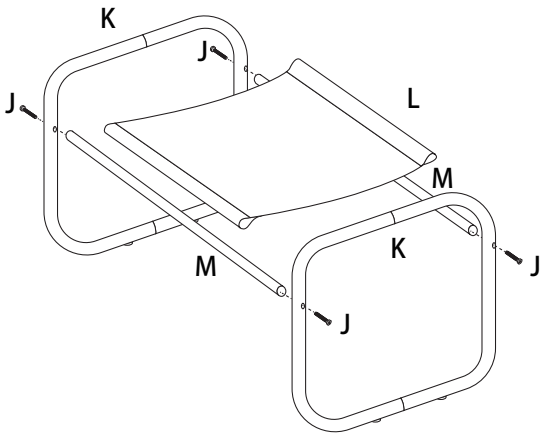

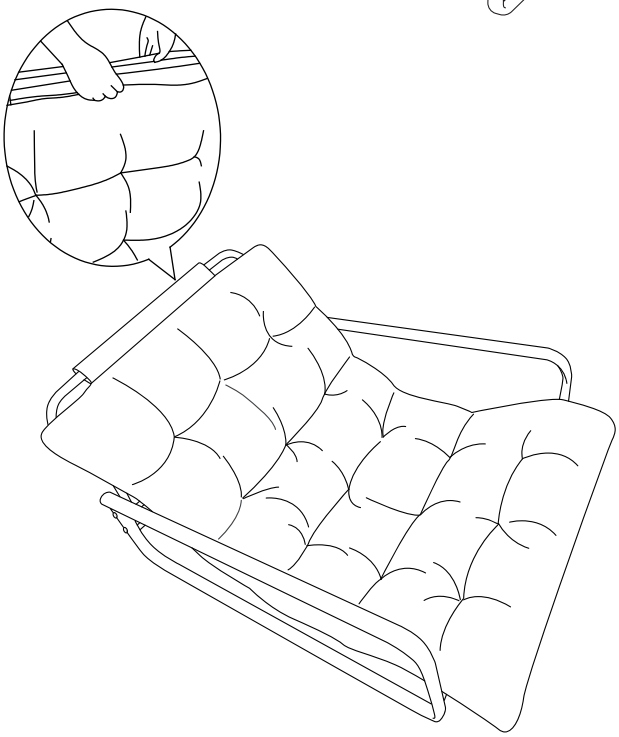

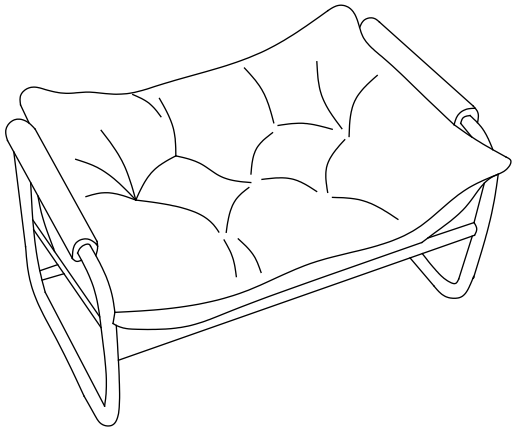

1

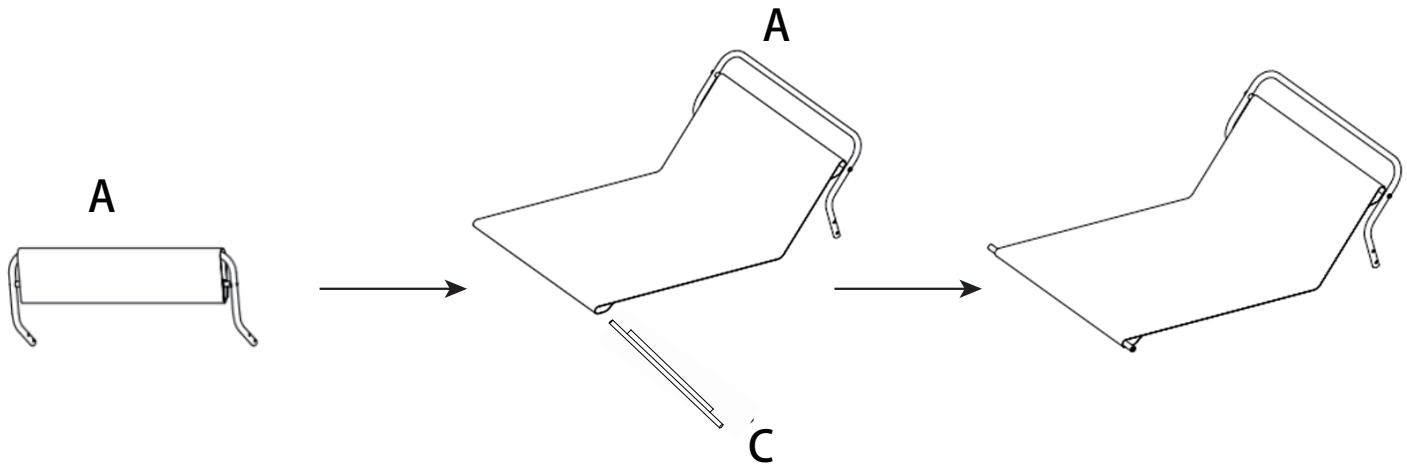

2

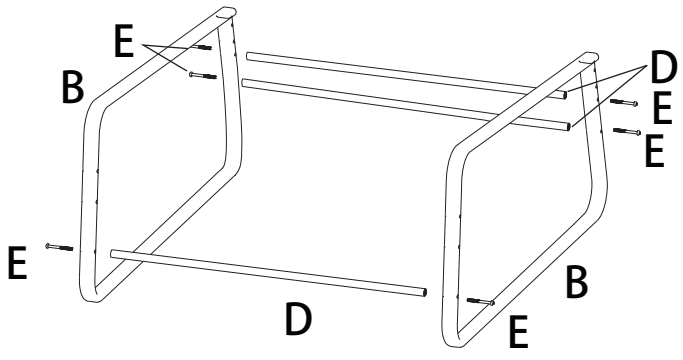

US Attention: Please screw all screws in 80% and then screw them to 100% when assembling.

3

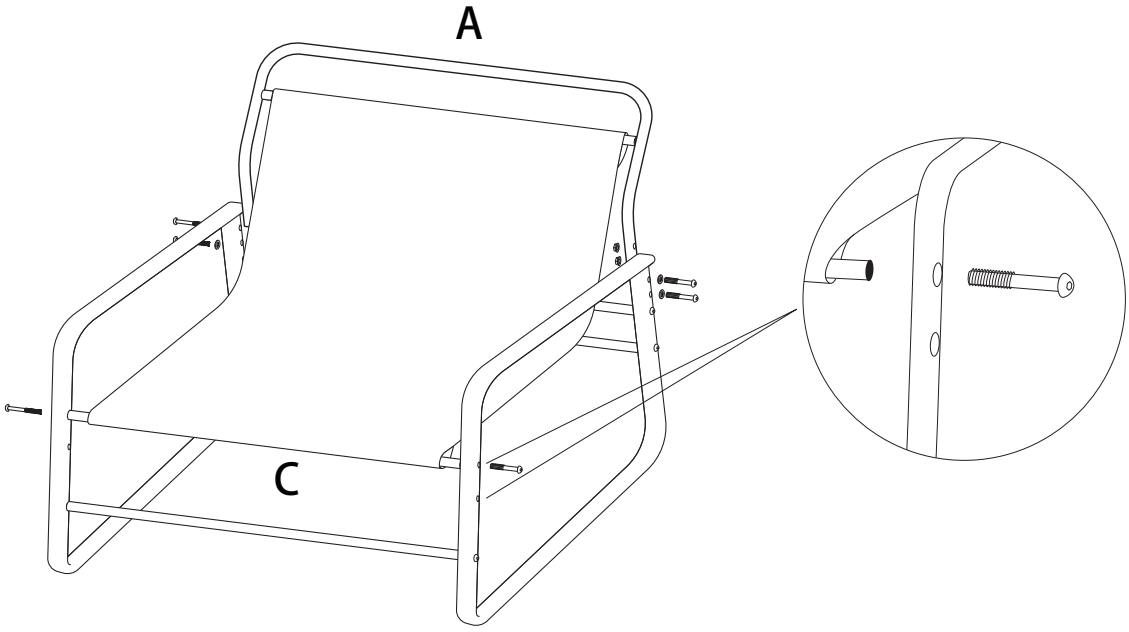

US You can choose different height of holes to assemble according to your favors.

4

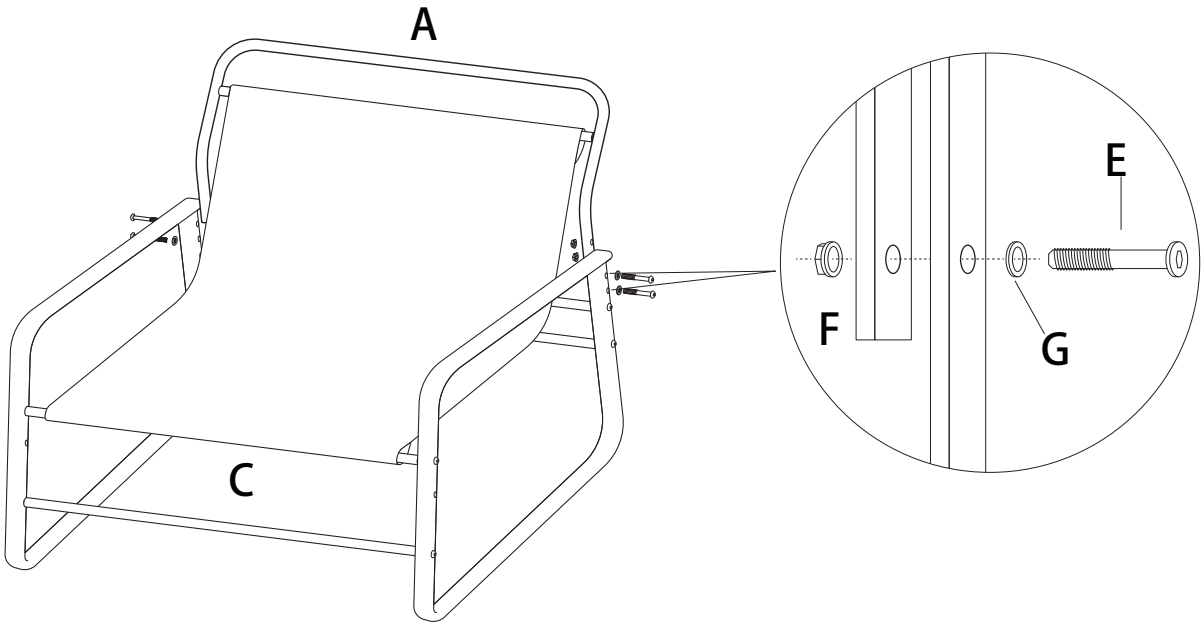

US **Attention: Please screw all screws in 80% and then screw them to 100% when assembling.**

1

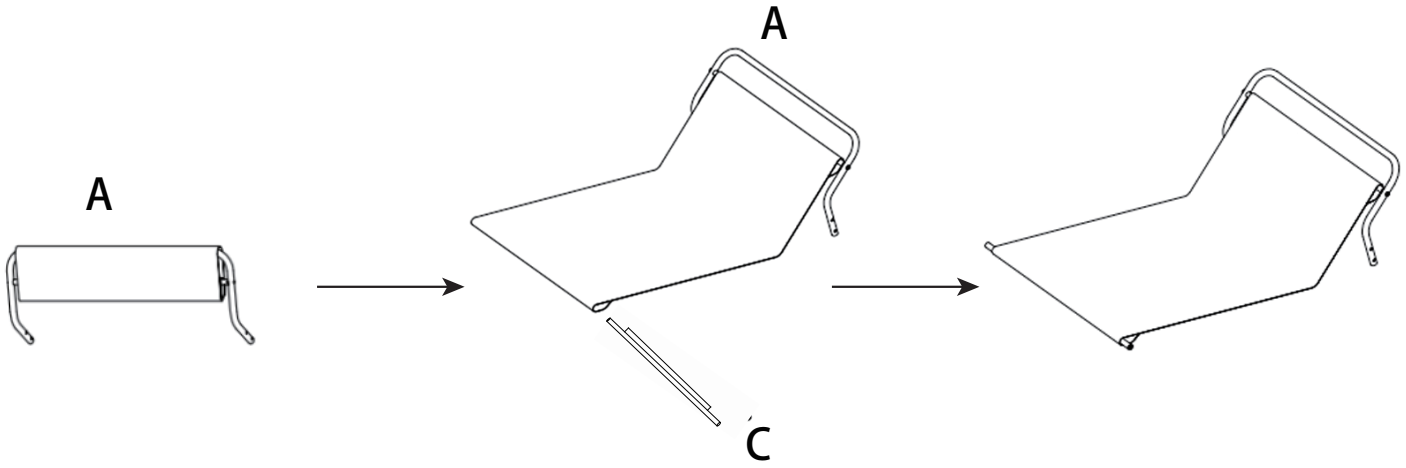

2

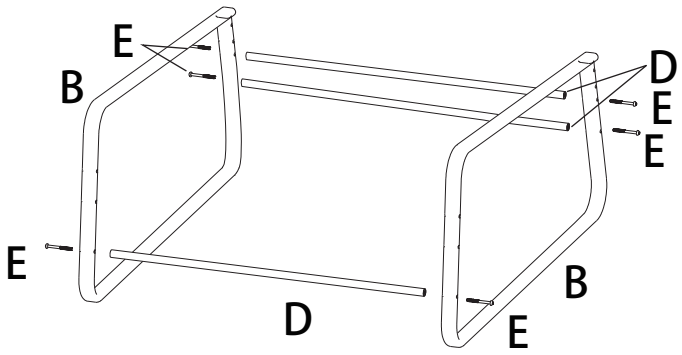

US Attention: Please screw all screws in 80% and then screw them to 100% when assembling.

3

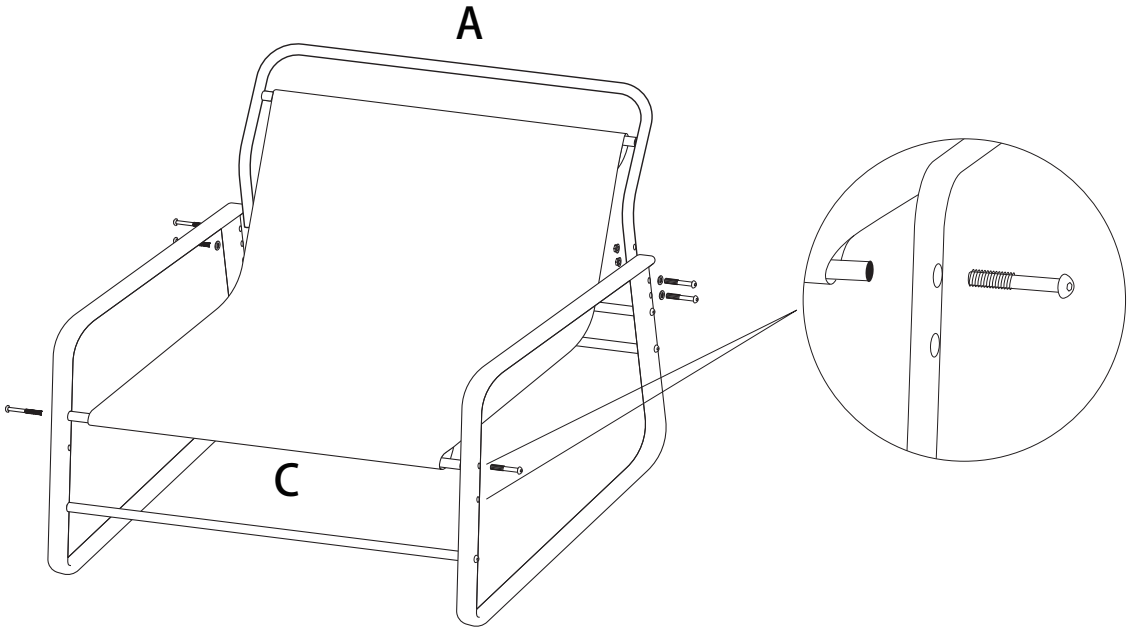

US You can choose different height of holes to assemble according to your favors.

4

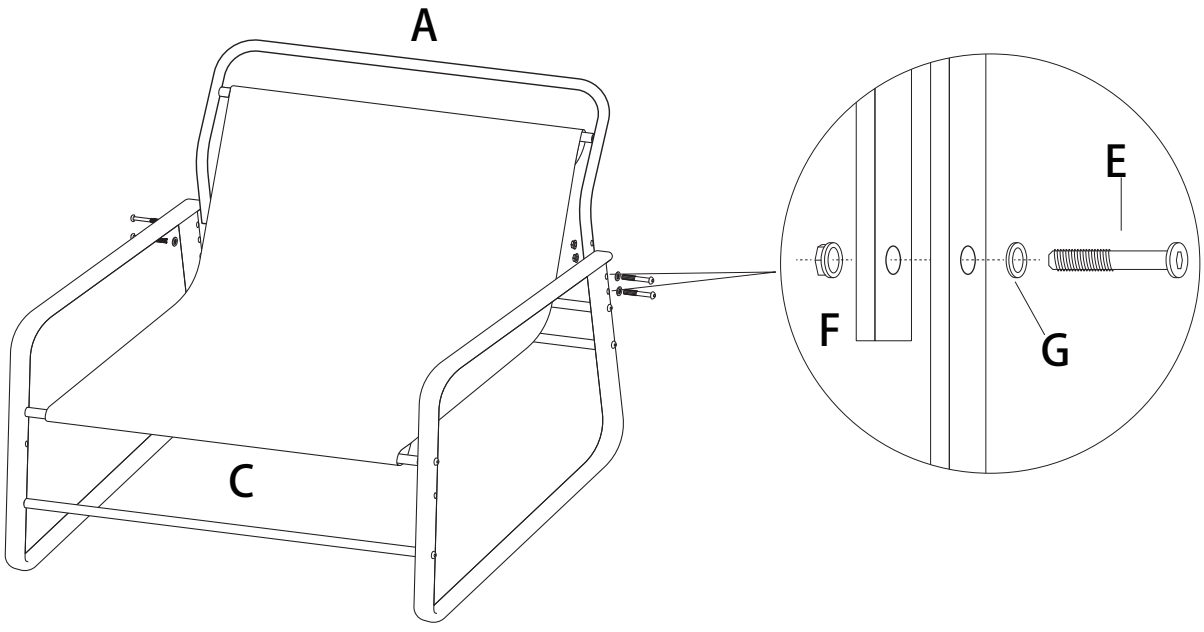

US **Attention: Please screw all screws in 80% and then screw them to 100% when assembling.**

5

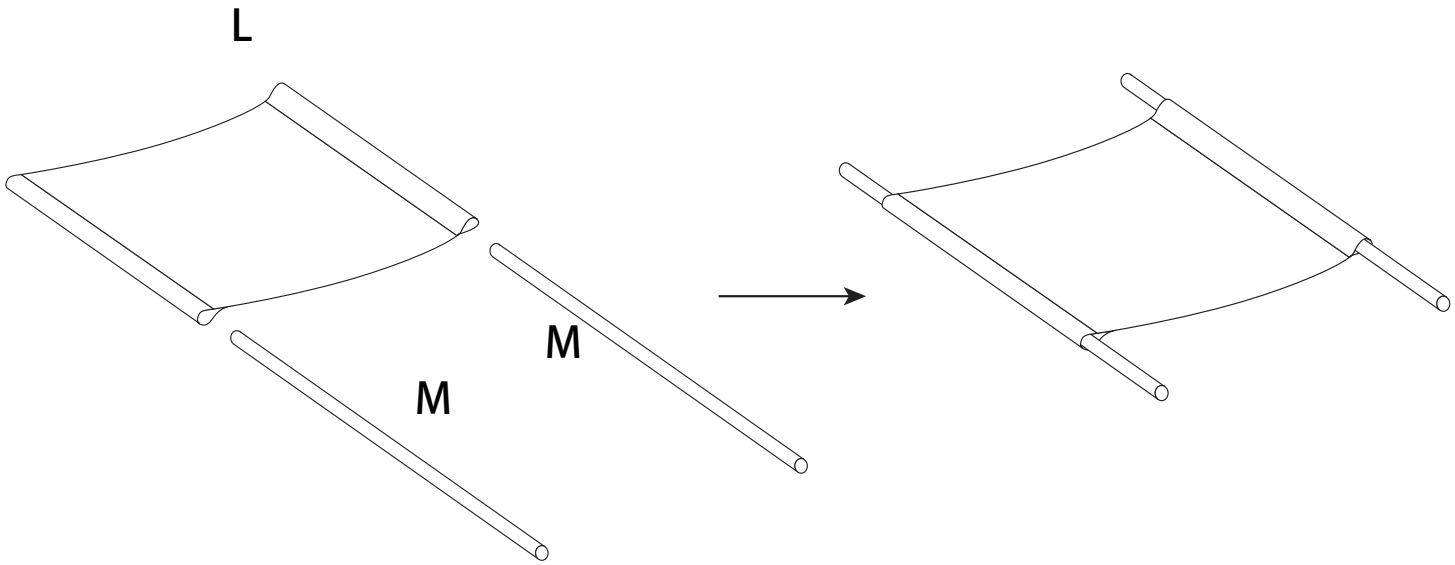

6

