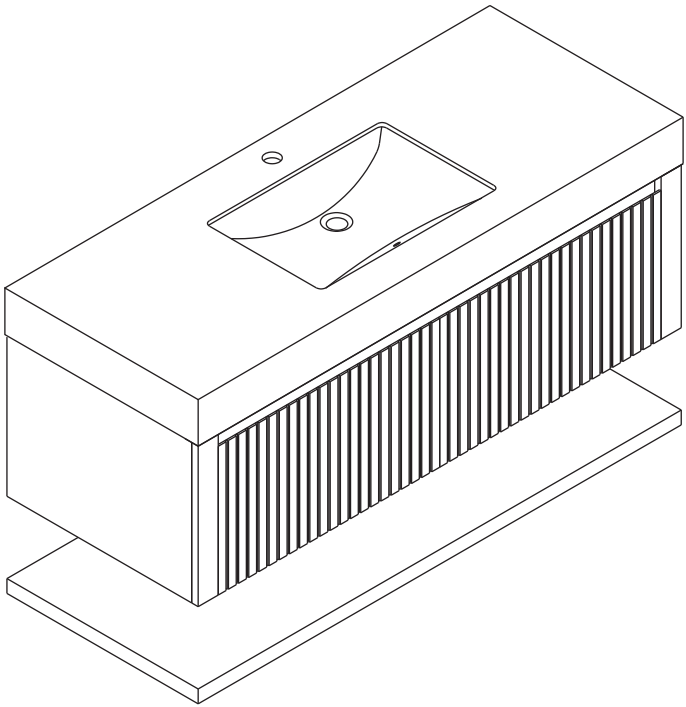

Bathroom Vanity

Notice:

1.Follow the installation instructions. Please confrm all accessories are preset before installation.

2. Do not fully tighten the screws during initial assembly. Fully tighten screws only once all pieces which are correctly assembled.

3. If you encounter any problems during installation, please contact our customer service.

4. Please unbox the item from the side with an open-label and put a carpet on the foor to avoid scratching it.



Recommended installers : 2

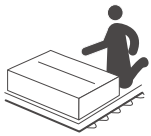

Put a carpet on the floor before unpacking

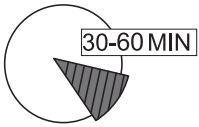

Estimate installation time: 30 minutes

Item no.	Reference Image	Qty
A	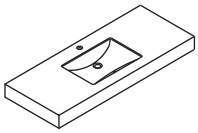	x1
B	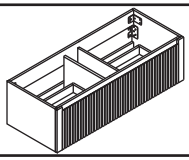	x1
C	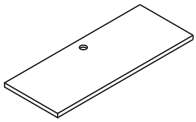	x1
D	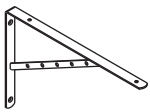	x2
1	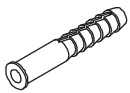	x8

Item no.	Reference Image	Qty
2		x8
3	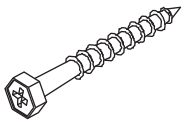	x4
4	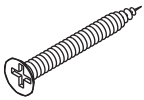	x4
5		x6
6		x1

1

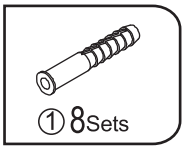
①8Sets

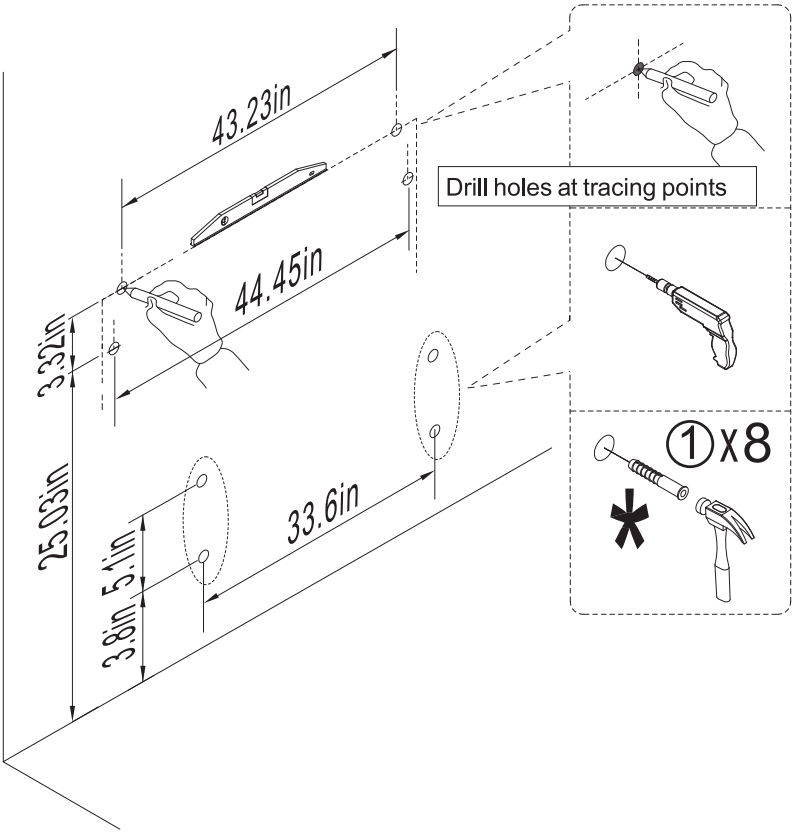
43.23in
44.45in
3.32in
25.03in
3.8in
5.1in
33.6in
Drill holes at tracing points
①x8
*

2

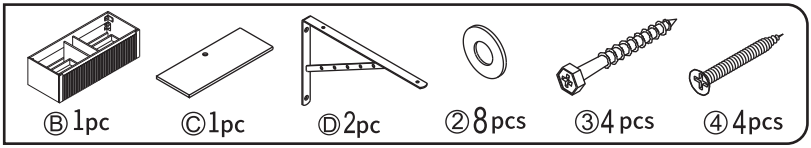

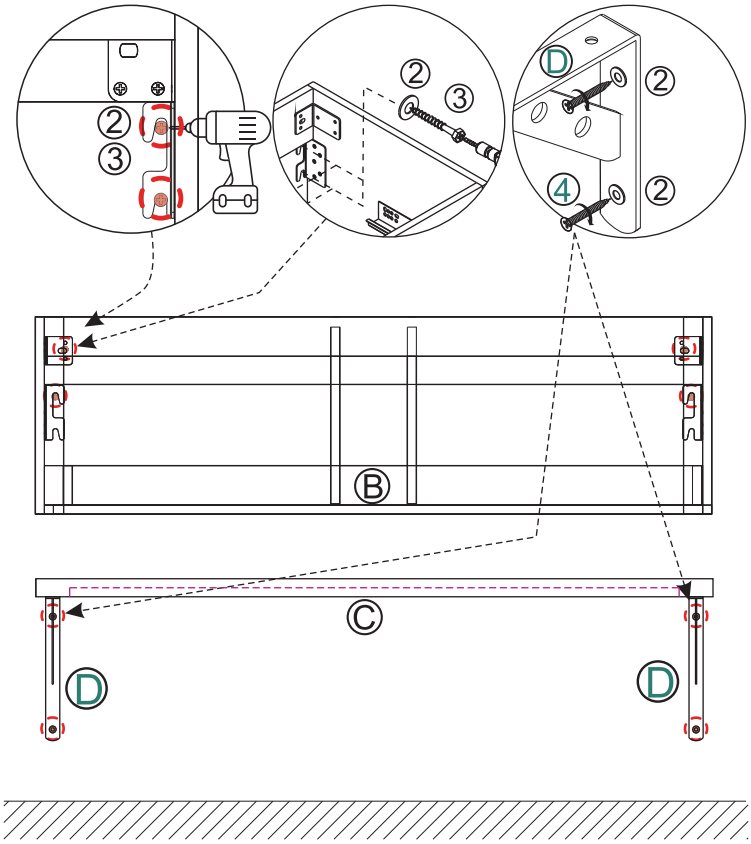

3

Ⓐ x1

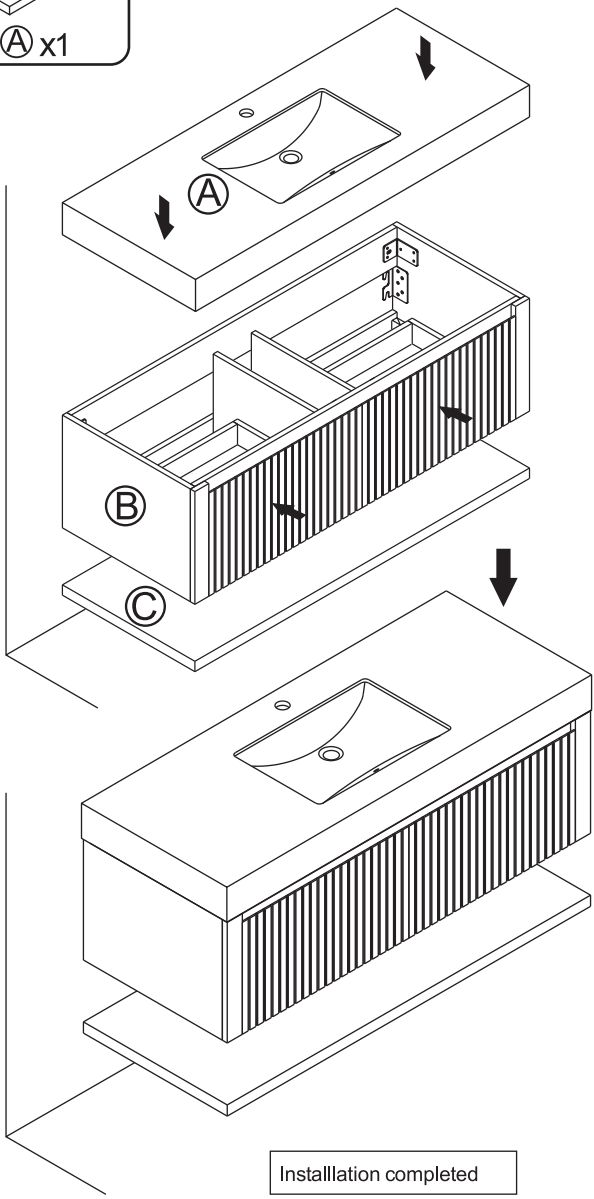

Installlation completed

4

Installation of drain assembly

Turn the screw at the bottom of the guide rail counterclockwise!

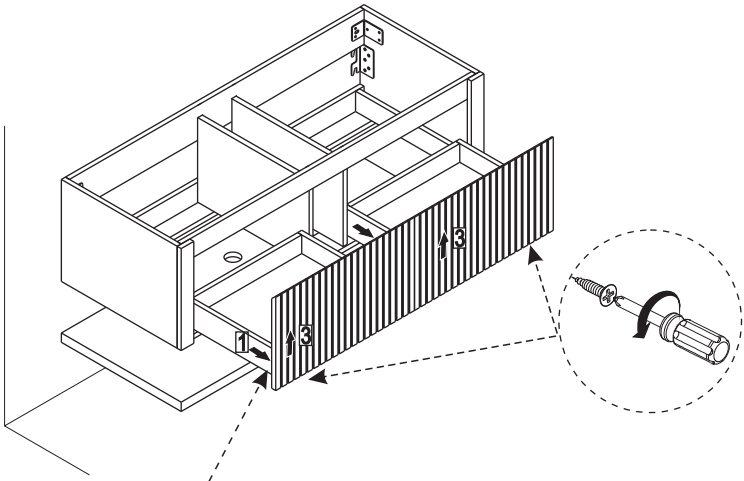

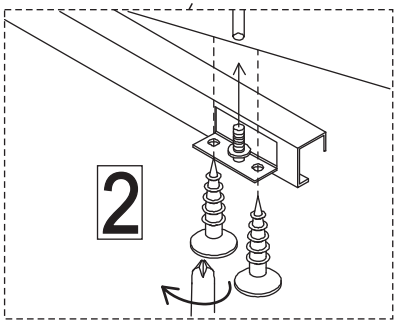

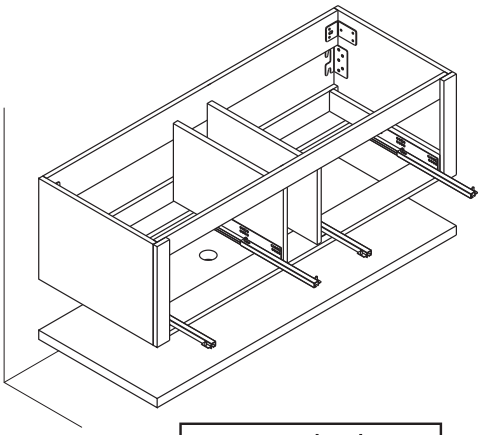

Move out the drawer

5

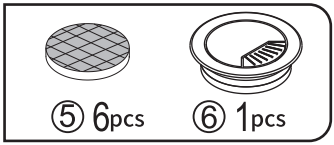

Installation of drain assembly

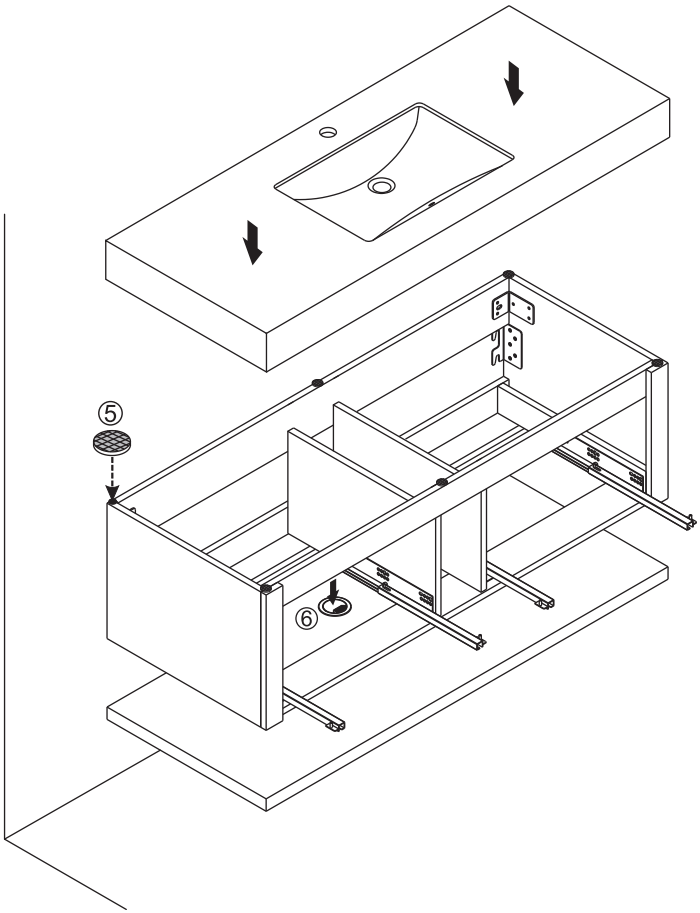

6

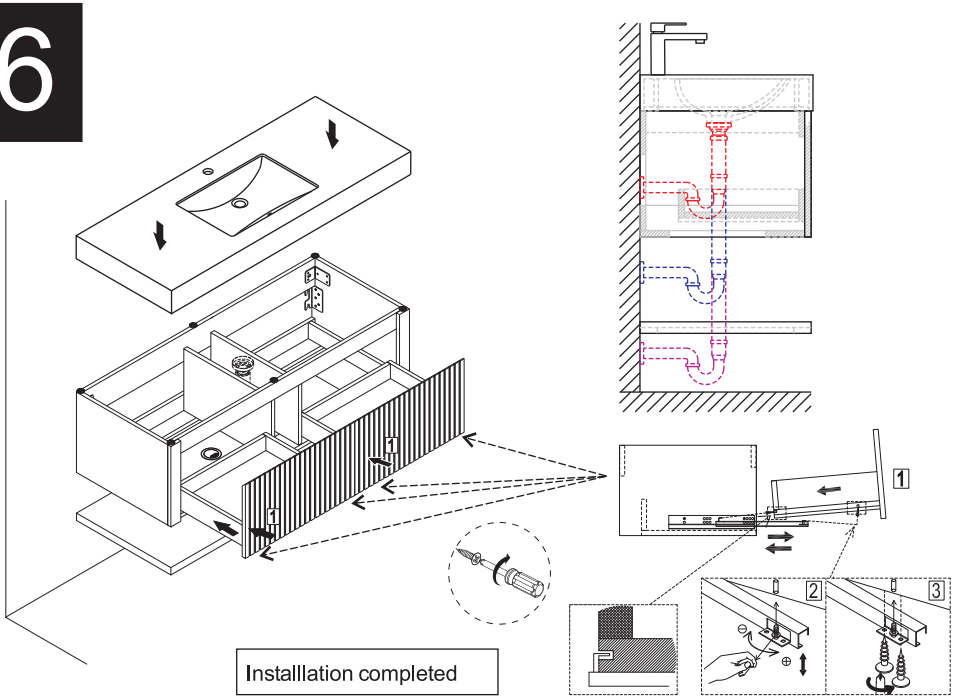

Installlation completed

Pop-up Waste Installation

STEP 1
Install Pop-up Waste with over flow.

STEP 2
Connect the drain pipe.

This product does not include faucet and drainage accessories. The content on this page is provided as installation suggestions only. Please carry out the installation according to the requirements of the product you actually purchased.

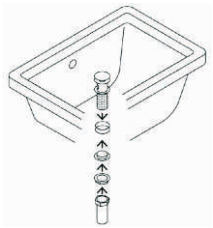

Always fully close the faucet after use!
Failure may cause:

Water Overflow
Continuous flow with blocked drain floods cabinetry, floors, and ceilings below, causing property damage and liability for compensation.

Personal Injury
Water accumulation significantly increases slip/fall risks (especially for children/elderly).

Cabinetry Damage
Water infiltration leads to swelling, warping, hardware corrosion, and countertop cracks.

Hidden Hazards
Persistent leakage erodes wall structures, breeds mold, and incurs high repair costs.

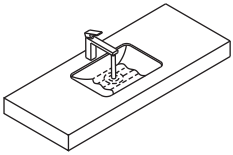

We strongly recommend that you:
- ☑ Confirm faucet is fully closed after each use;
- ☑ Regularly inspect faucet/hoses for leaks;
- ☑ Shut off angle valve immediately and seek repair if malfunction occurs;
- ☑ Cut off main water supply when leaving home long-term.

Disclaimer: Users bear full responsibility for damages caused by faucet left open or delayed repairs.