ASSEMBLY INSTRUCTIONS

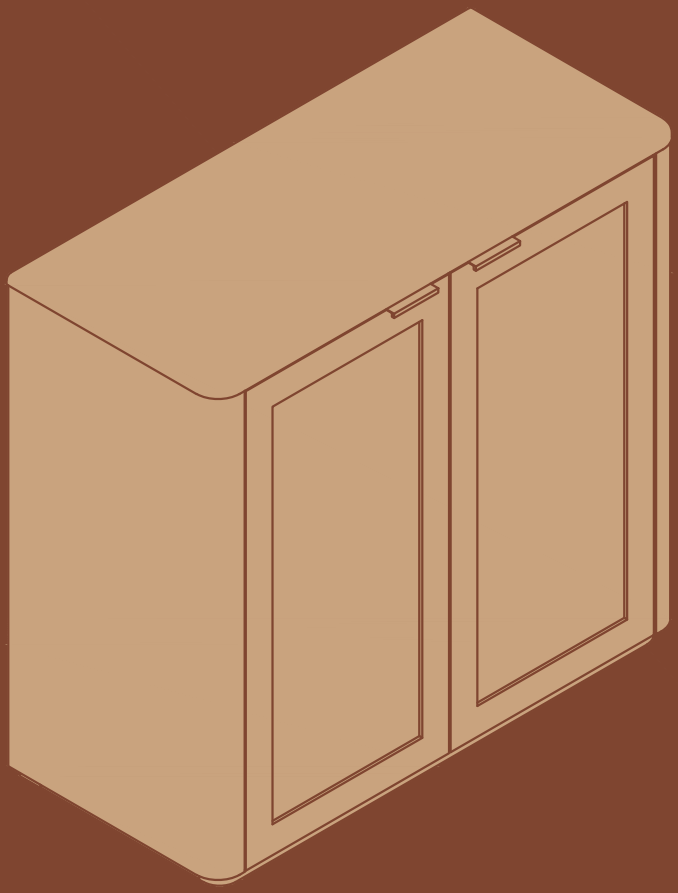

Cabinet

CONTENTS

Safety Precautions 01

Parts List 02

Hardware List 03

Tools Required 04

Assembly Instructions 05-25

INTRODUCTION

Thank you for your purchase. Please read all instructions carefully prior to assembly and retain this manual for future reference. If you require assistance, please contact our Customer Support team.

IMPORTANT SAFETY GUIDELINES

1. This package contains multiple components and hardware. Verify all items against the Parts List prior to beginning assembly.
WARNING: Choking hazard. Keep small parts away from children.

2. **NOTICE:** Assemble the unit on a clean, non-abrasive surface (such as carpet or flattened cardboard) to prevent scratching the finish.

3. **CAUTION:** Heavy components. Two-person assembly is highly recommended to prevent injury or product damage.

4. **WARNING:** Tip-over hazard. The unit may be unstable during assembly. Do not move or use the product until assembly is complete and all fasteners are securely tightened.

5. Should you encounter issues during assembly, contact our Customer Support team for immediate assistance.

WARNING: Failure to strictly follow these assembly instructions may result in product damage or serious personal injury.

Parts List

ID	Description	QTY
1	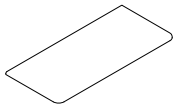	1
2	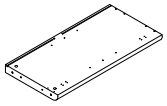	1
3	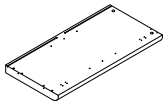	1
4	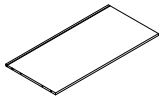	1
5		1
6	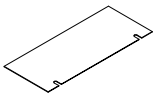	1
7	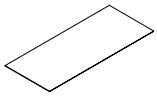	1
8	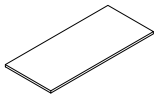	1
9	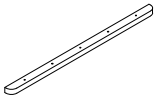	1
10		2

ID	Description	QTY
11	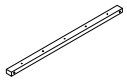	1
12	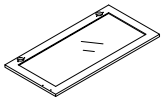	1
13	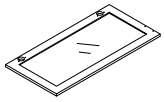	1
14	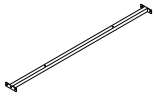	1

Hardware List

ID	Description	QTY
A	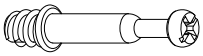	16+1
B	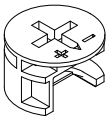	16+1
C	 Ø6*30mm	12+1
D	 Ø4*15mm	4
E	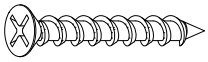 Ø4*30mm	6
F	 Ø3.5*12mm	4
G	 Ø3*16mm	10+1
H	 Ø4*14mm	26+2
I	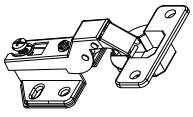	4
J		10+1

ID	Description	QTY
K	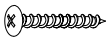 Ø4*25mm	2
L	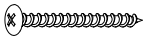 Ø4*35mm	2
M	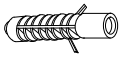	2
N	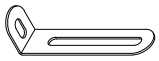	2
O	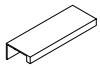	2
P		8+2
Q		1
R	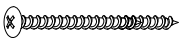 Ø4*50mm	4
S		4
T	 Ø4*13mm	2

Tools Provided

ID	Description	QTY
Z1	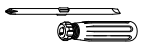	1

Tools Required (Not Included)

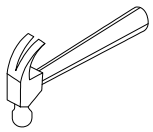	

NOTICE: These tools are required for wall mounting only.

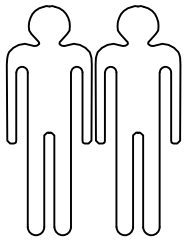

Multi-person installation

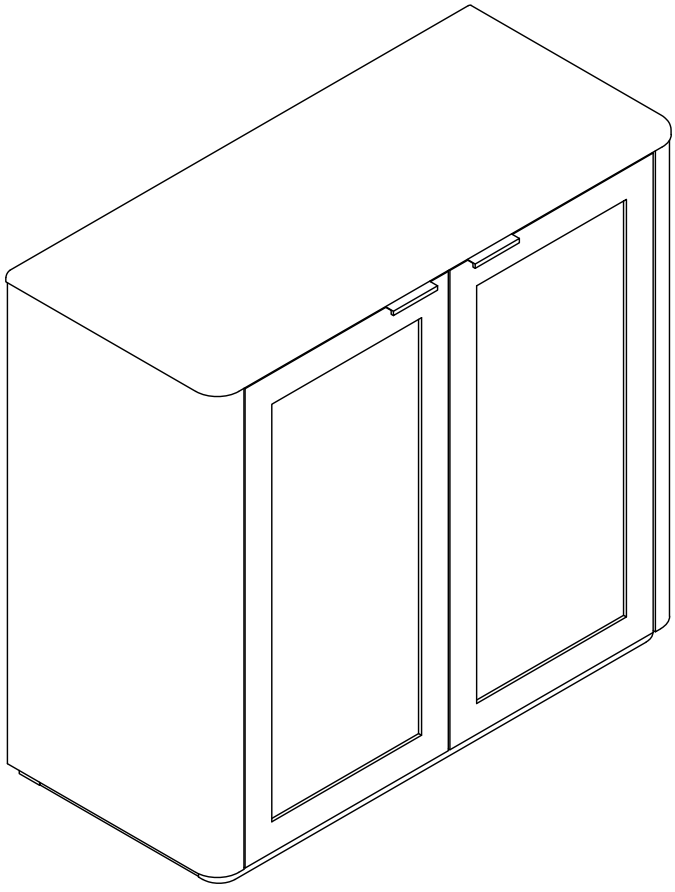

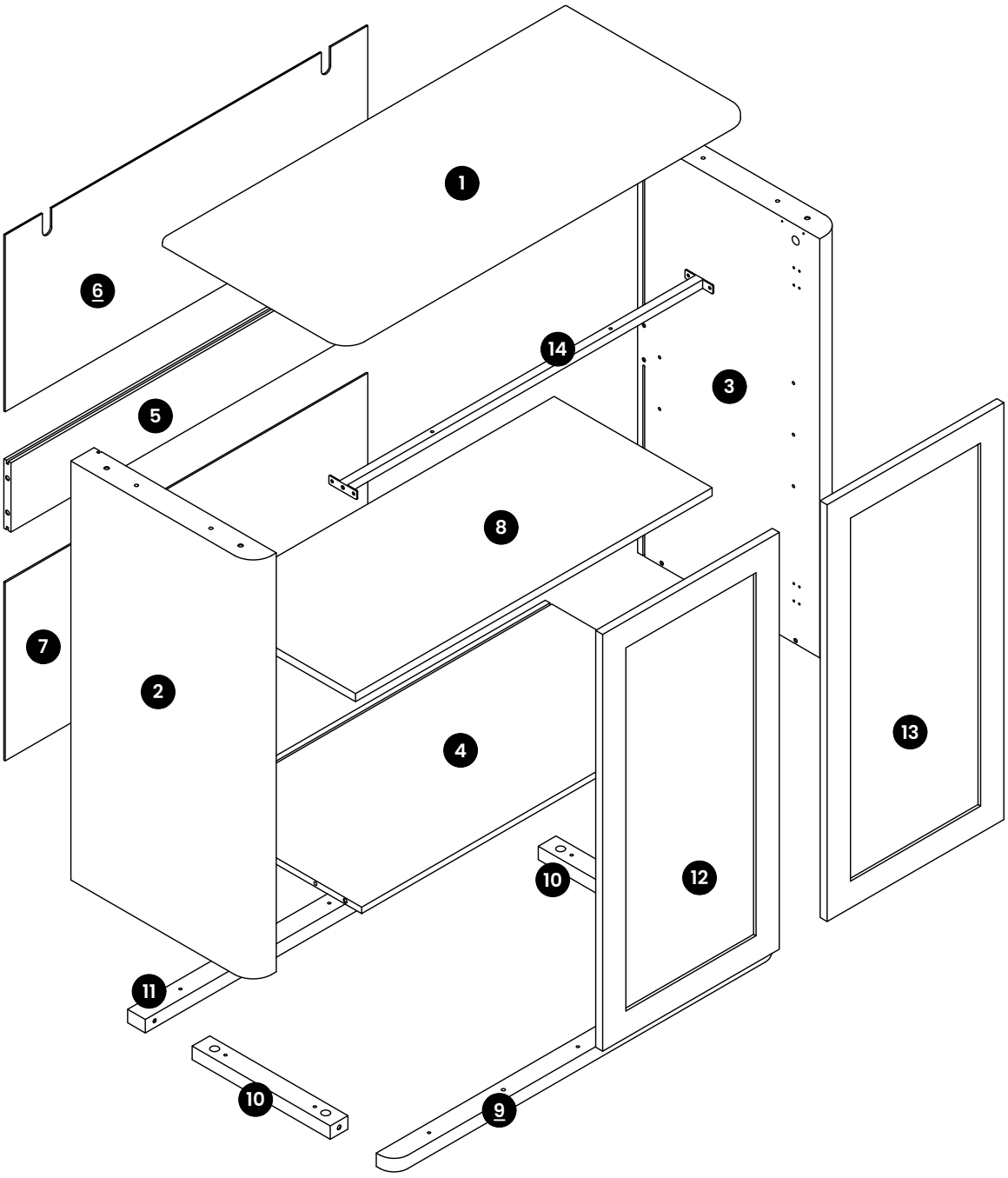
1
6
14
3
5
8
7
2
4
13
10
12
11
10
9

STEP 1

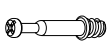

A X12

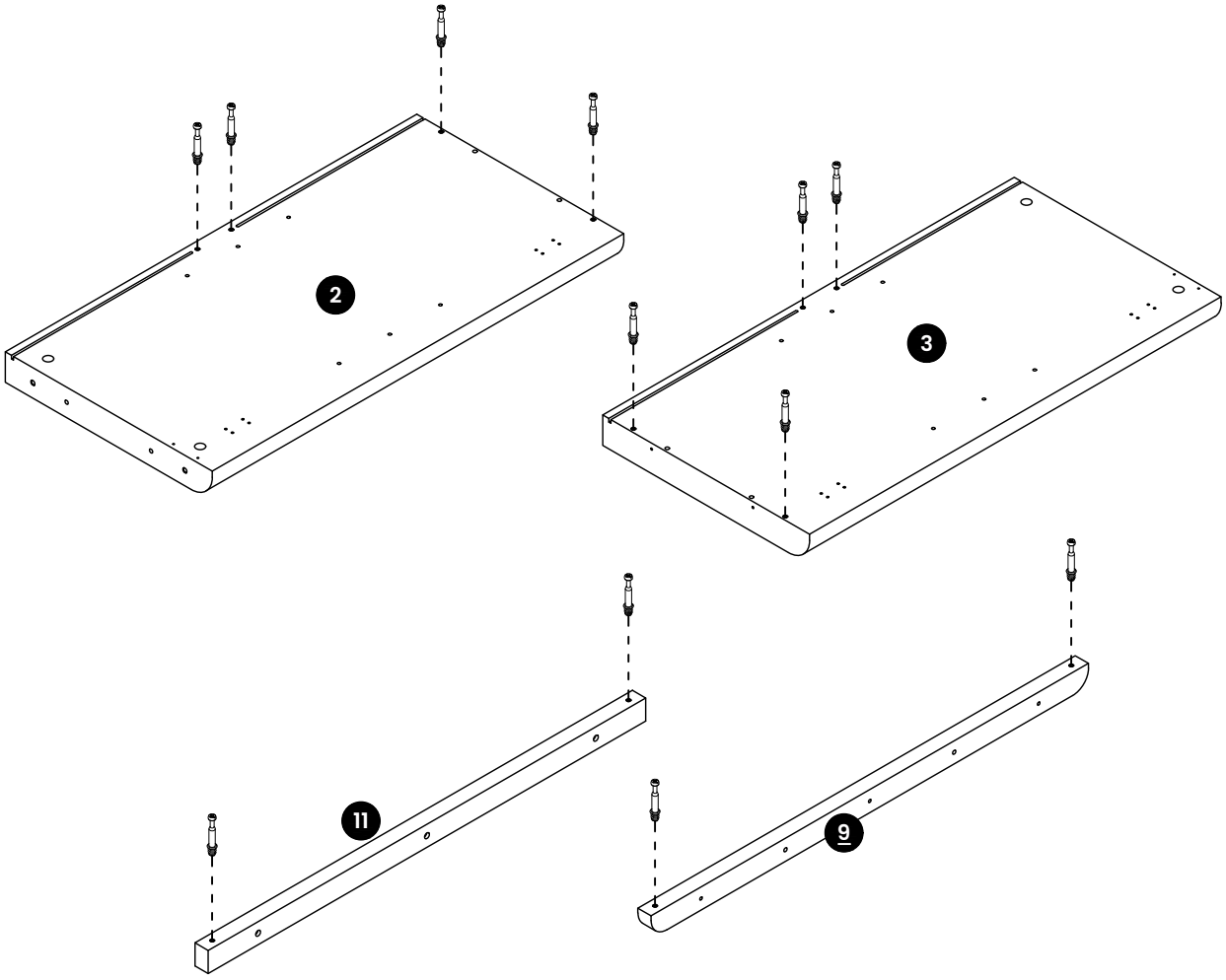

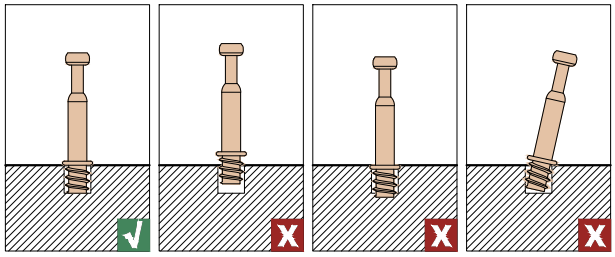

NOTICE: Ensure the cam bolts are installed vertically and at the correct depth to ensure a secure connection.

STEP 2



B X 4

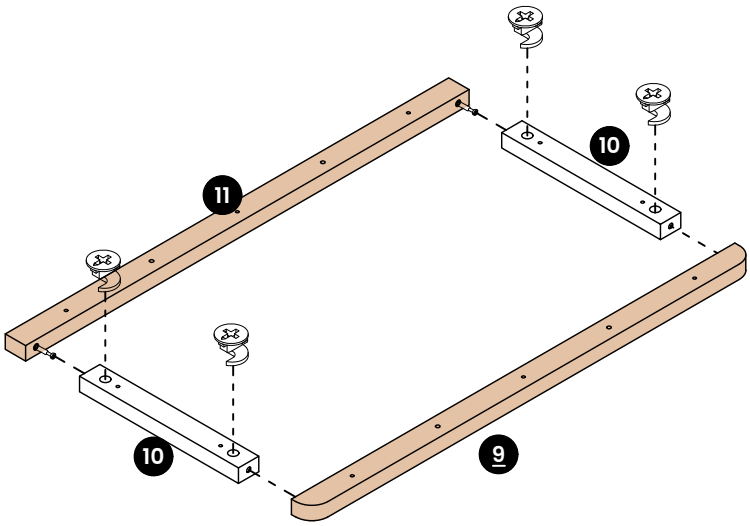

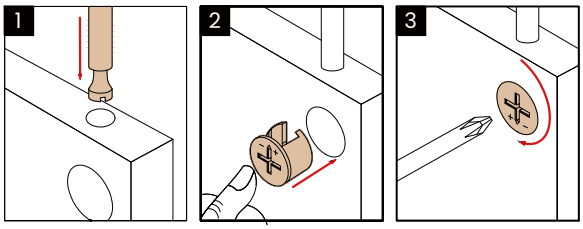

STEP 3



B X4



C X2

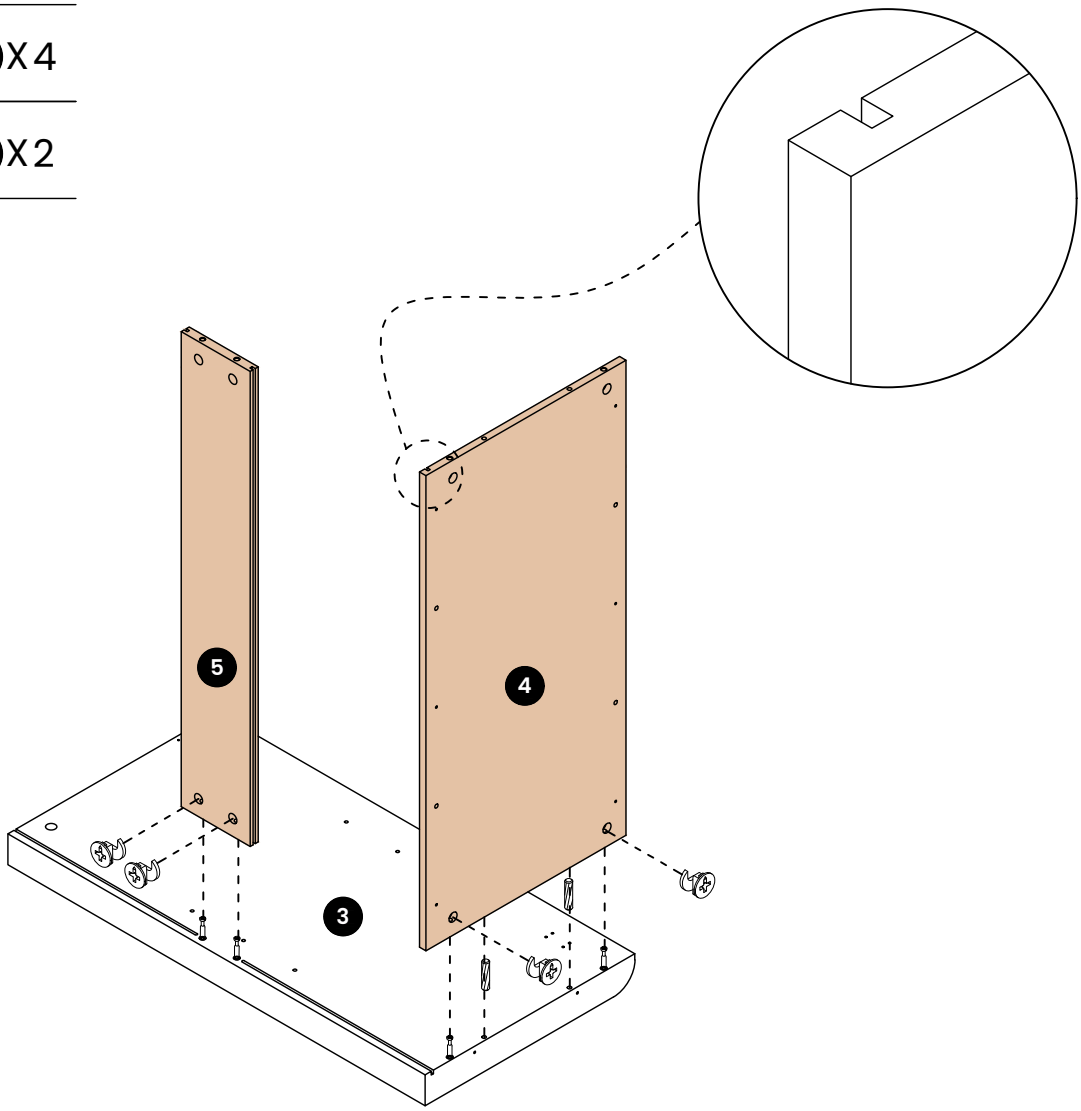

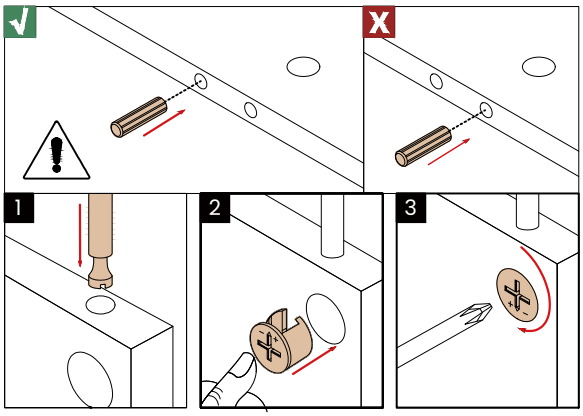

STEP 4

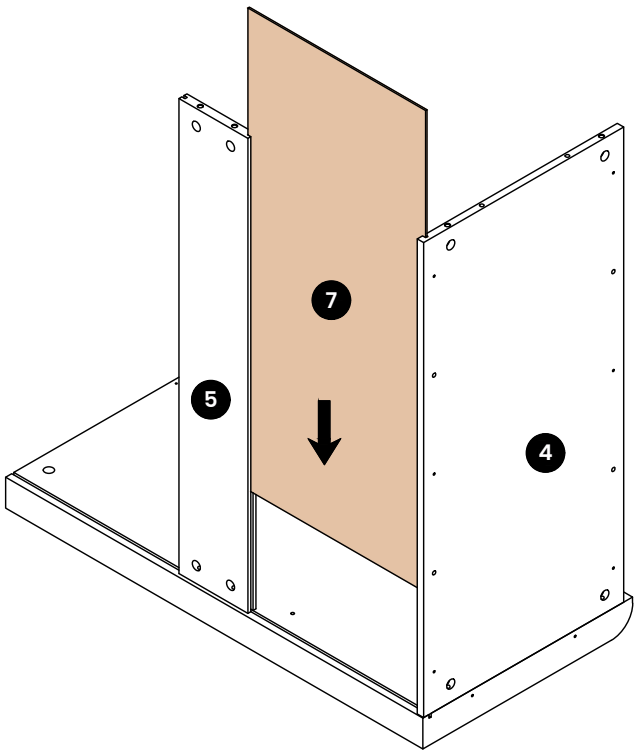

STEP 5



B X 4



C X 2

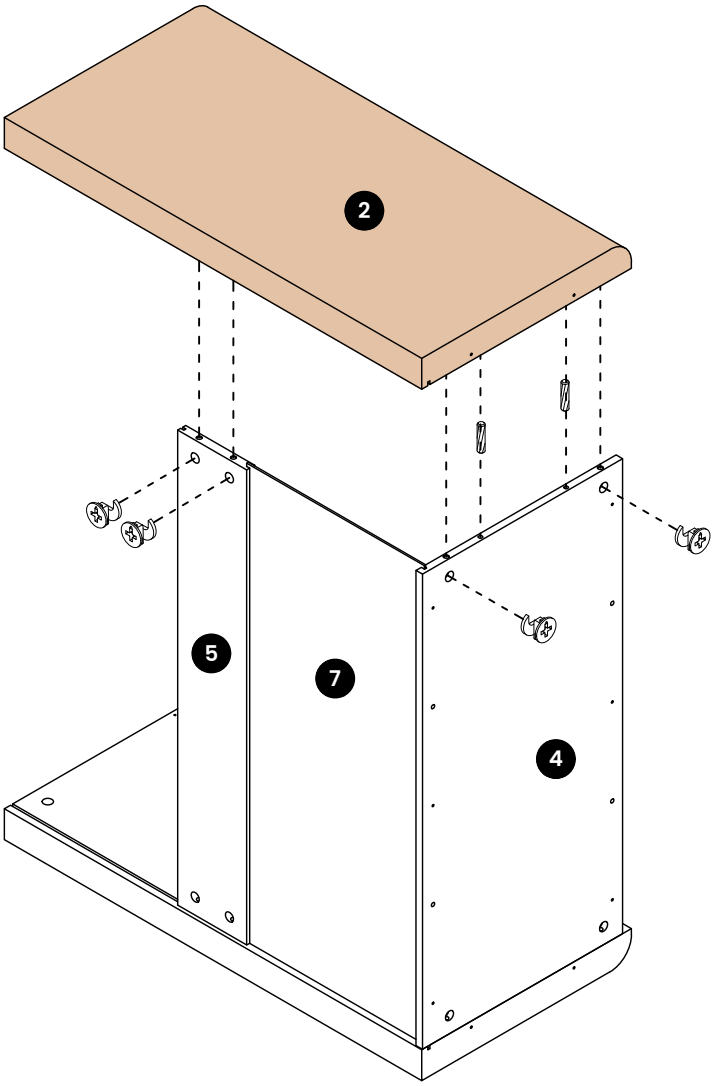

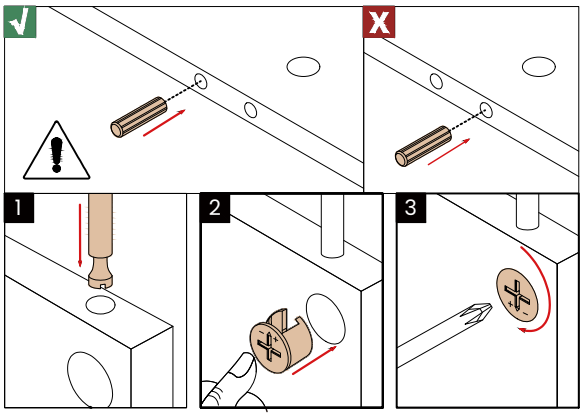

STEP 6

 C X 4

 E X 6

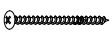 R X 4

Notice:
Secure the left and right side panels with the 4 long screws (R).
Do NOT fasten them to the base plate.

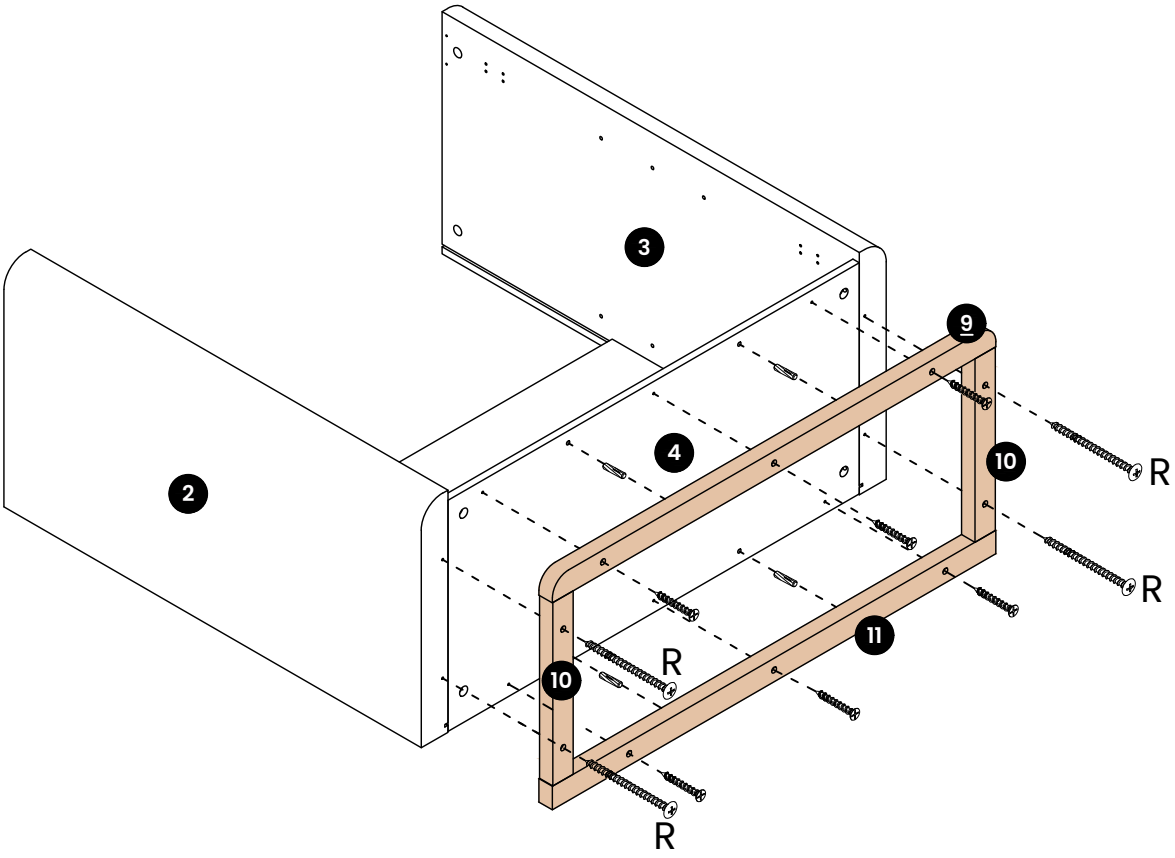

STEP 7

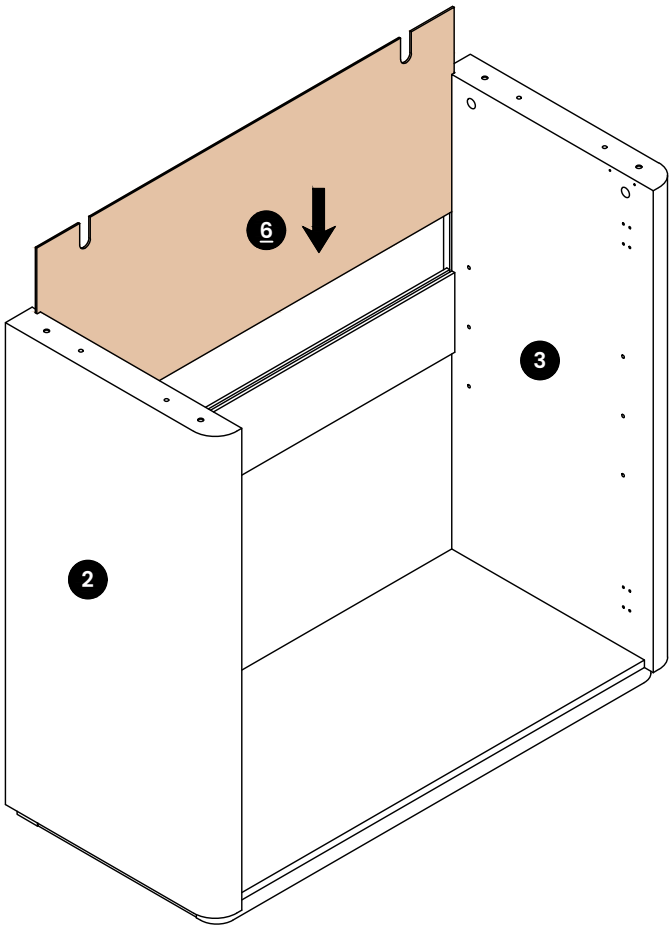

STEP 8



D X 4

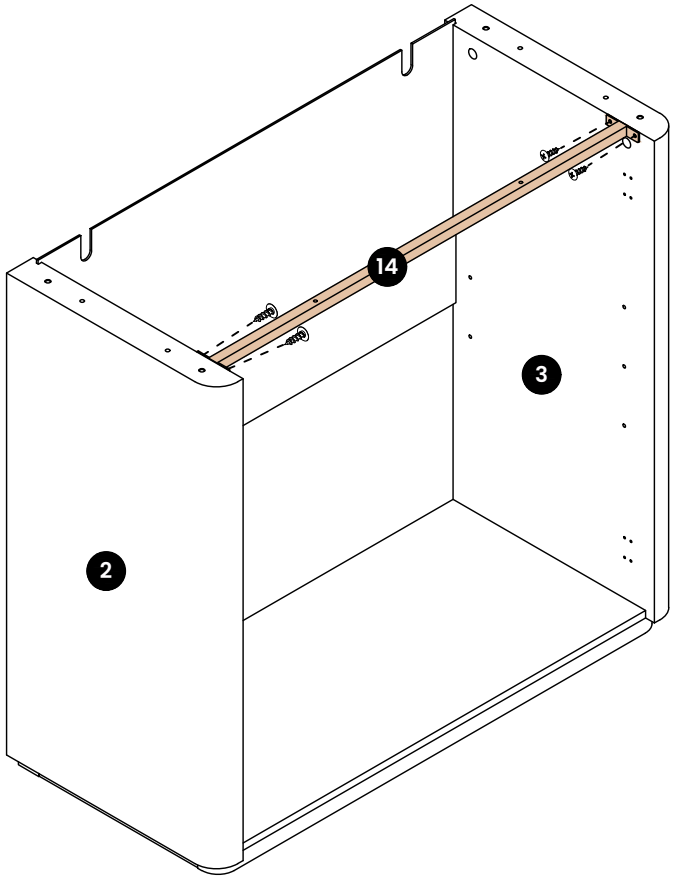

STEP 9

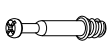

A X 4

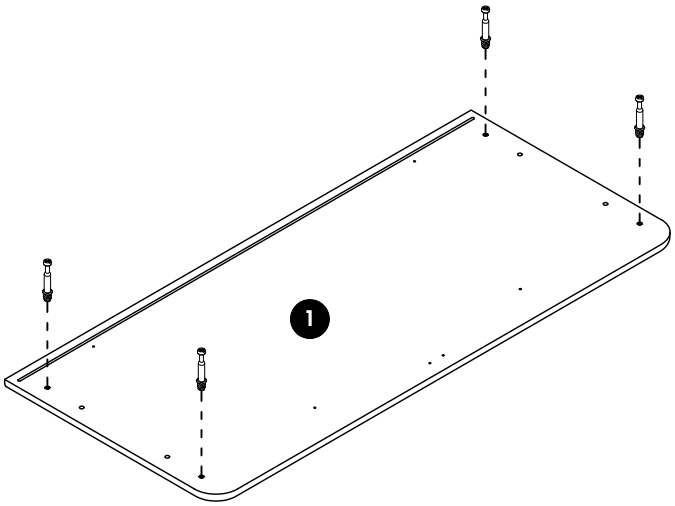

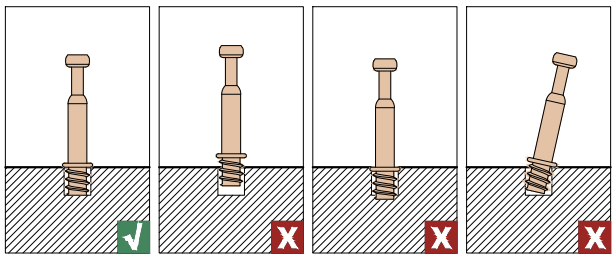

NOTICE: Ensure the cam bolts are installed vertically and at the correct depth to ensure a secure connection.

STEP 10


N X2


T X2


Q X1


H X2

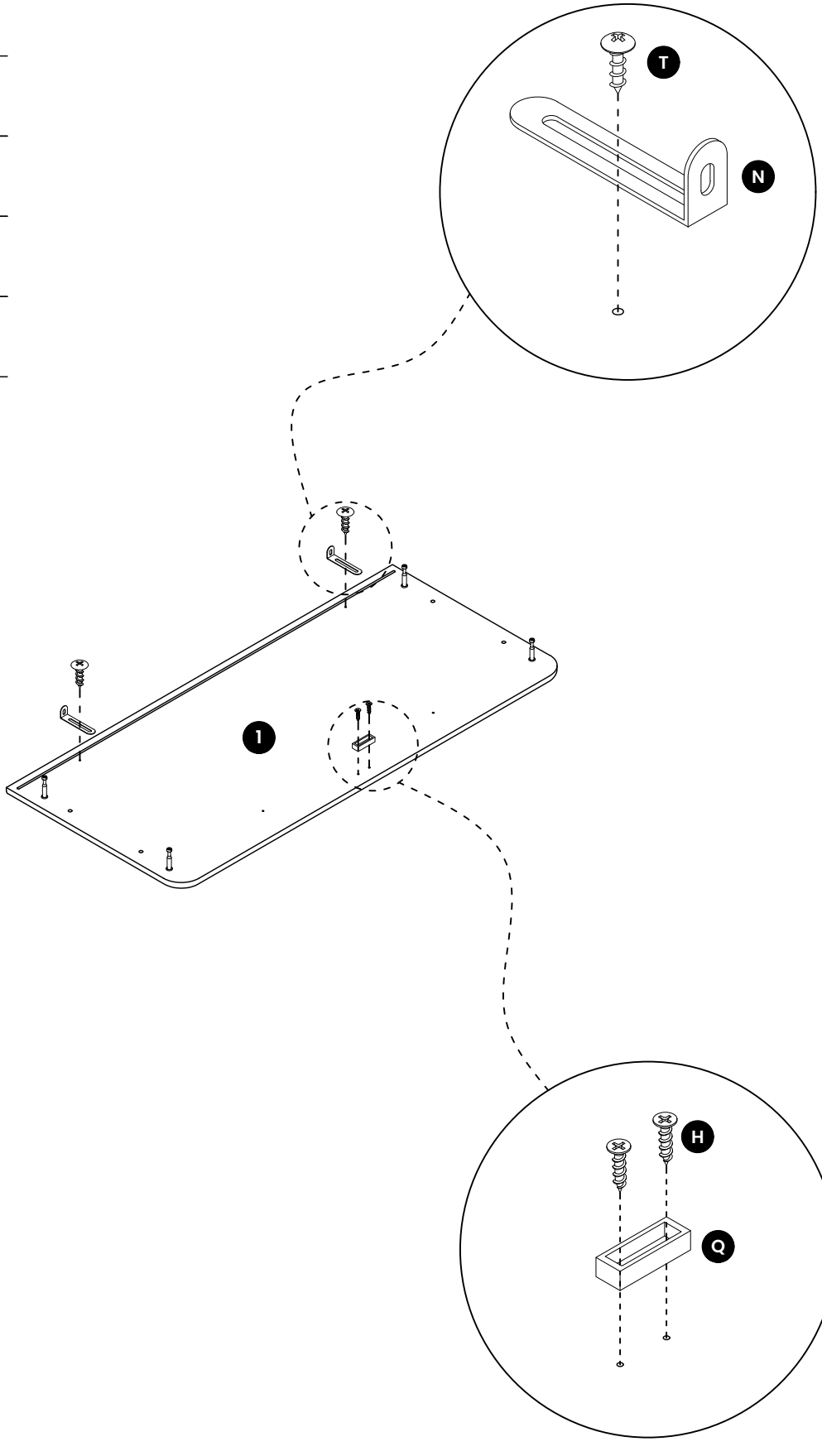

STEP 11


B X 4


C X 4


K X 2

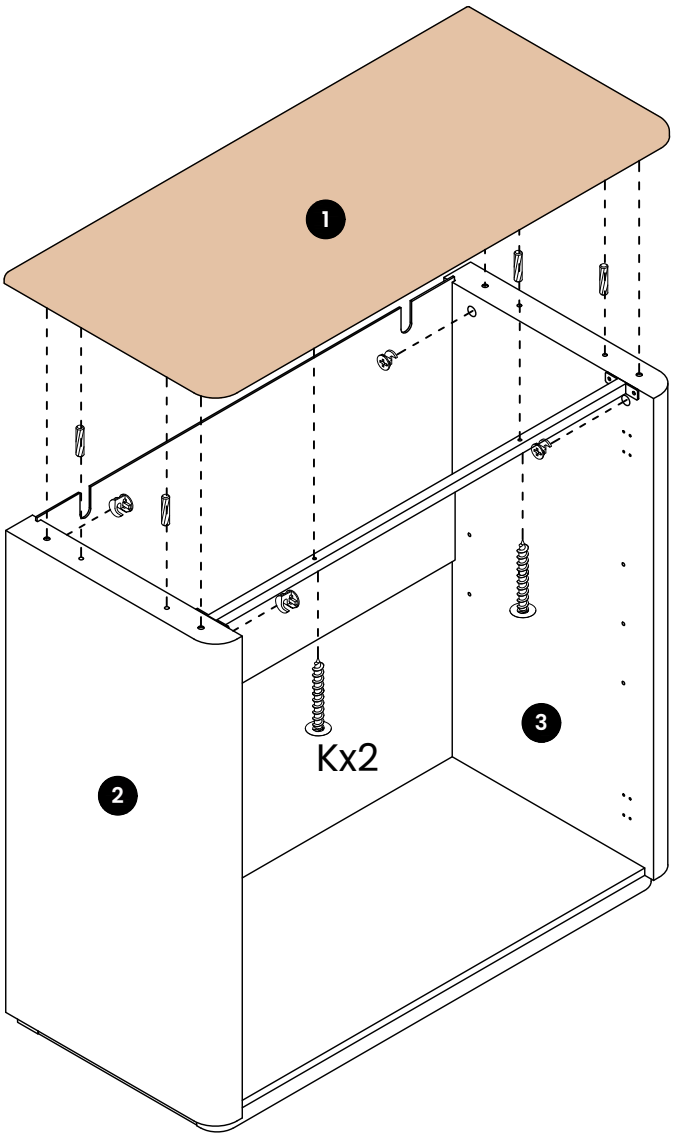

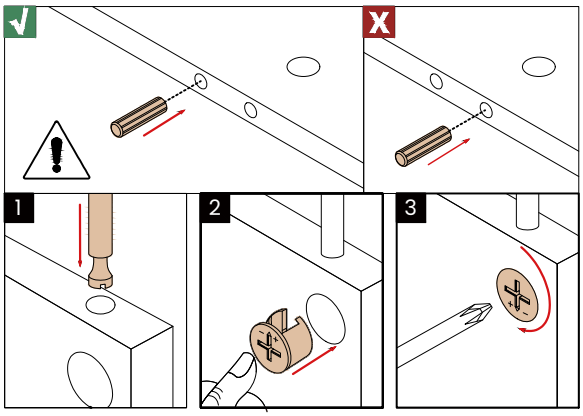

STEP 12


G X10


J X10

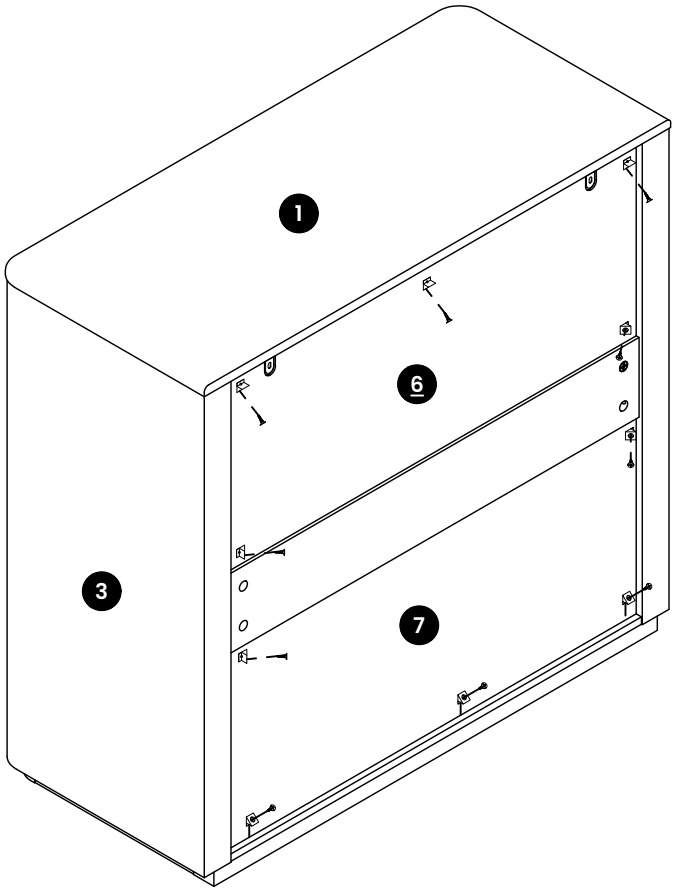

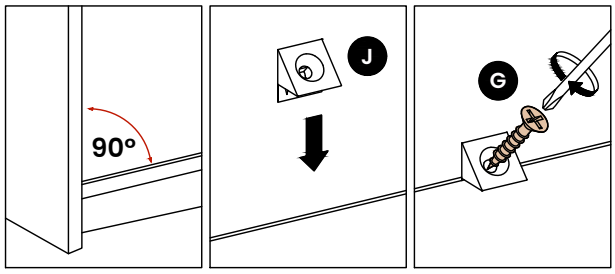

STEP 13

L X2

M X2

Wall-Mounted Installation
Step 1: Identify the correct location for the anti-tipping device on the wall and make a clear mark.
Step 2: Drill a hole, then fix the expansion plug firmly in the wall.
Step 3: Use screws to attach the L-shaped angle bracket to the wall.

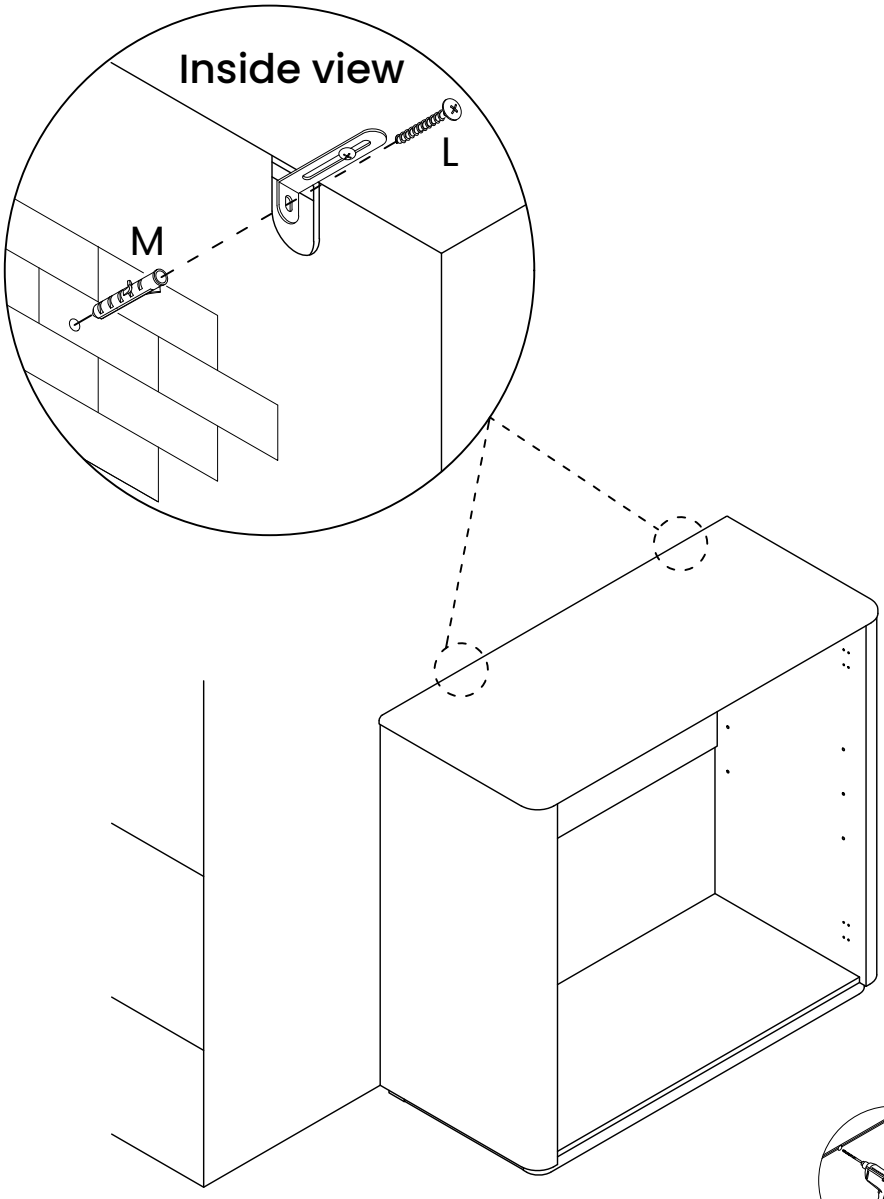

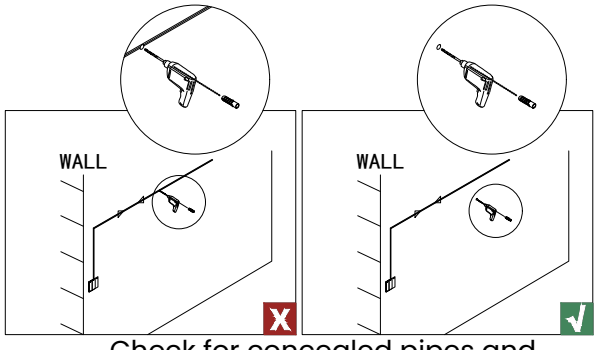

Check for concealed pipes and electrical wiring before drilling into the wall.

STEP 14

	H X8
	I X4
	F X4
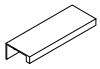	O X2

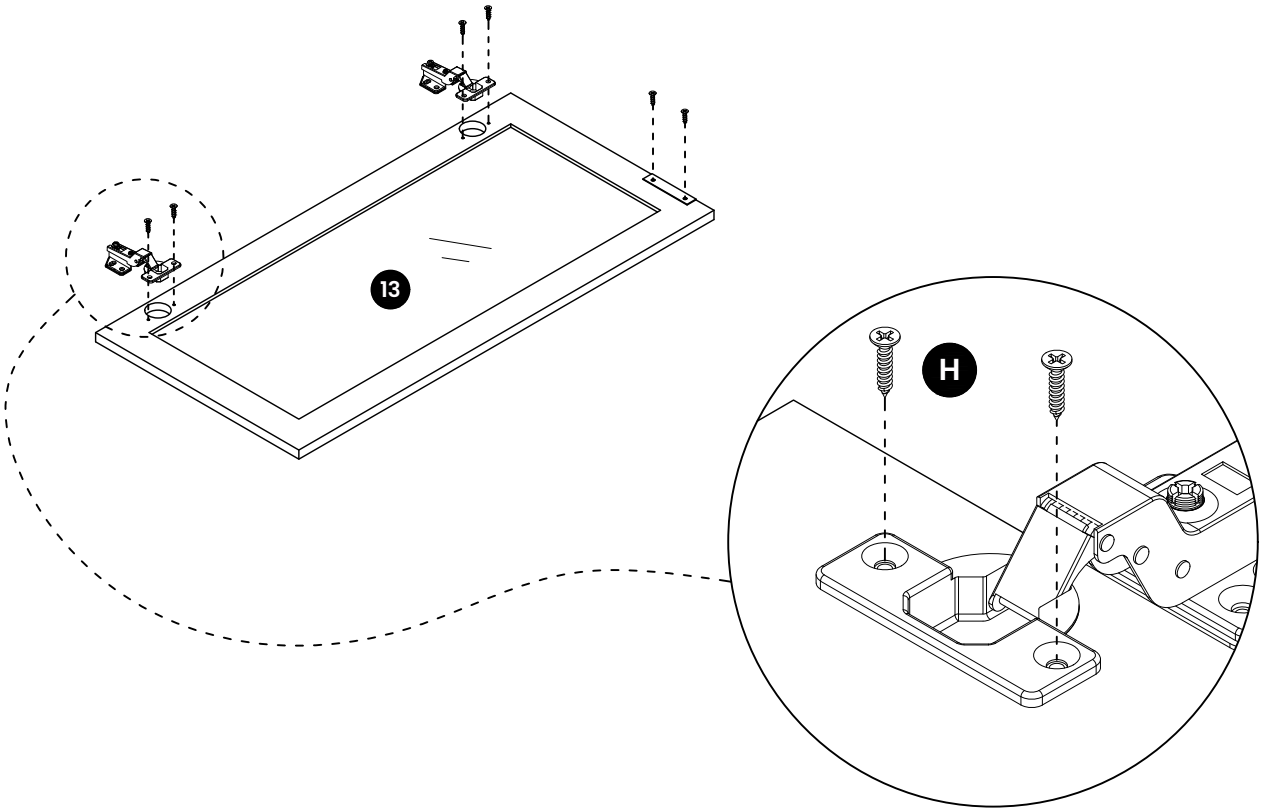

STEP 15



H X16



P X8

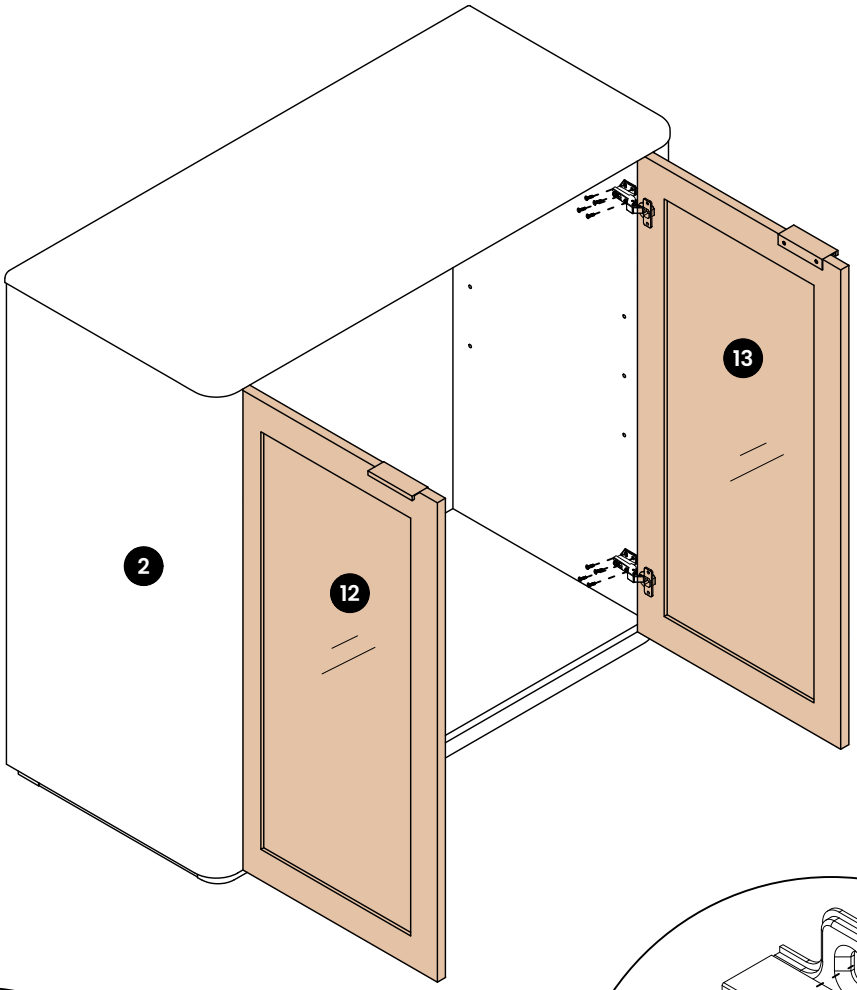

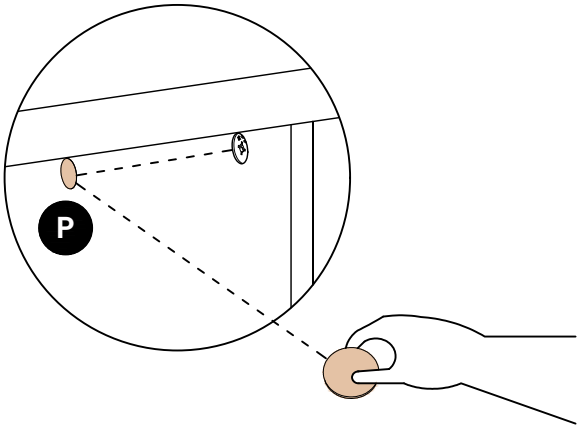

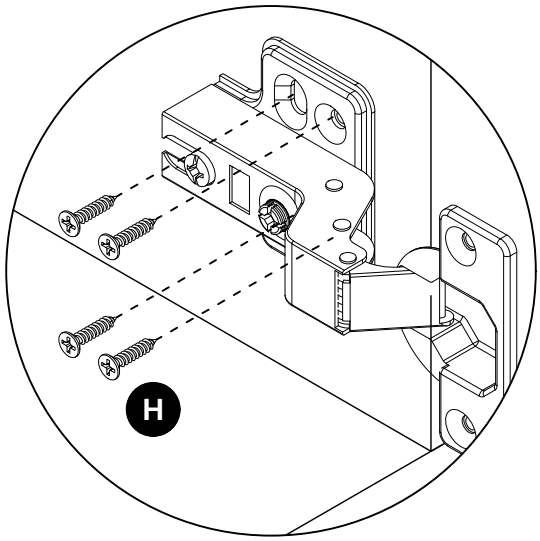

STEP 16



S X 4

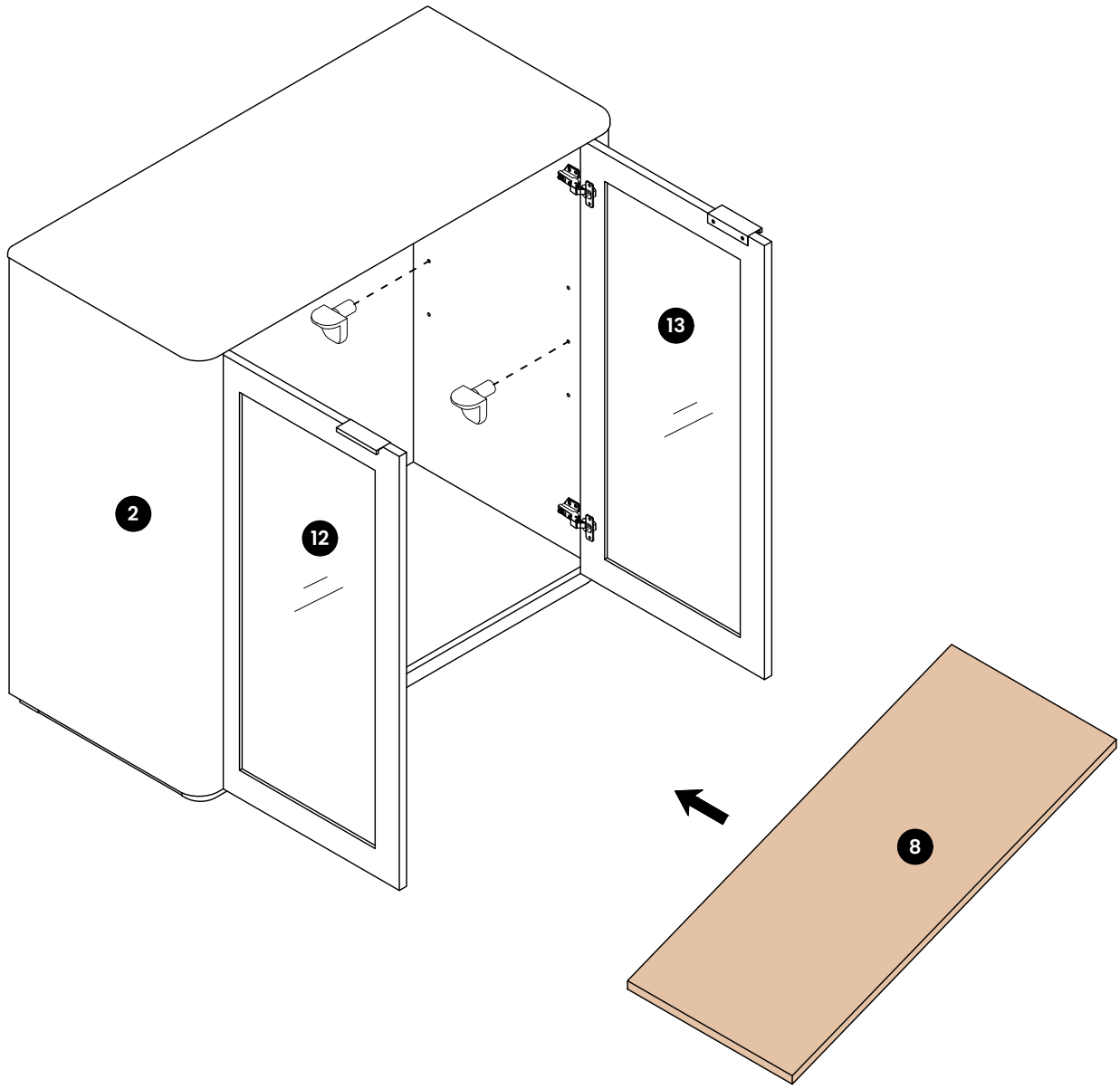

Door Adjustment Guide

Prior to adjusting the hinges, ensure the cabinet is level and square.

If the cabinet is not level, loosen the anti-tip device to re-align the cabinet to a vertical position, then re-secure the device.

Perform all hinge adjustments while the door is in the open position.

CAUTION: Two-person operation required. One person should support the door while the other performs the adjustments.

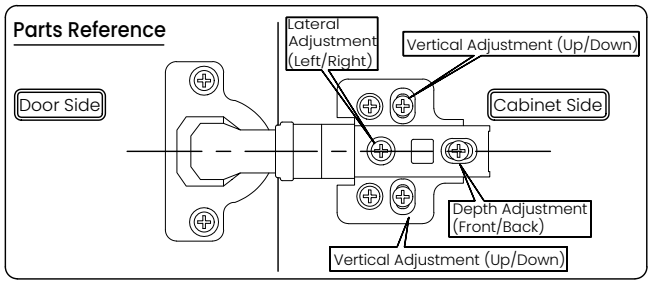

Door Alignment Instructions



Follow the steps below to adjust the door depth.

1 **Loosen the depth adjustment screws.**

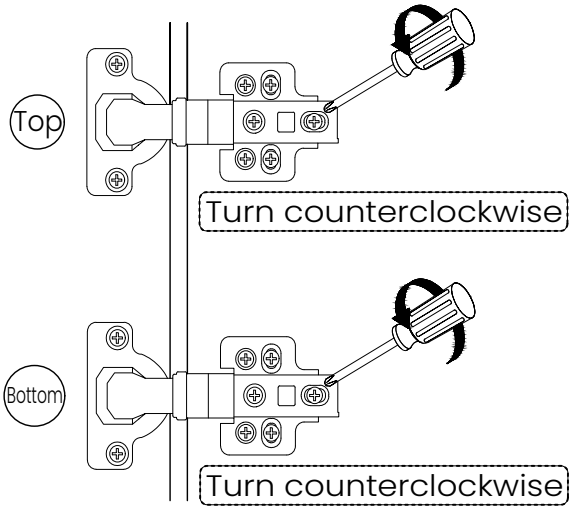

NOTE: If the gap remains uneven, turn the lateral adjustment screw to align the doors side-to-side.

2 **Push the door inward until it is flush with the cabinet frame.**

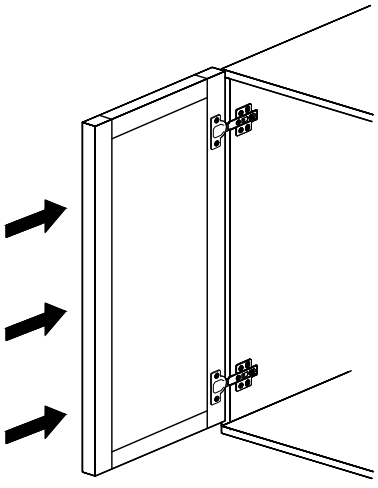

3 **Tighten the depth adjustment screws.**

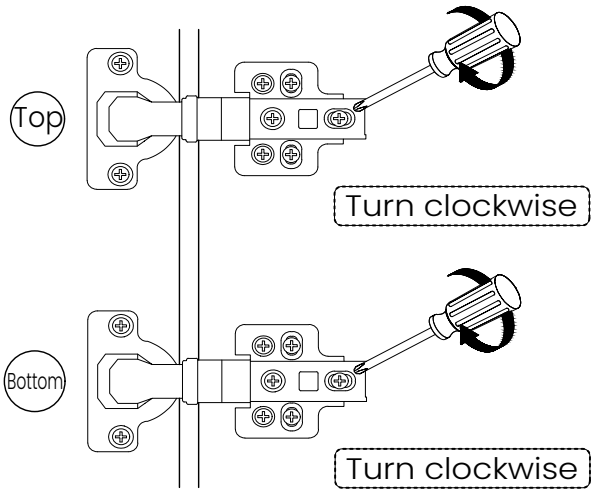

Door Gap Adjustment

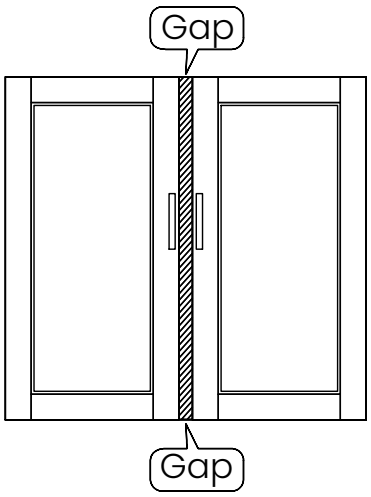

NOTE: If the doors overlap, turn the lateral adjustment screw counterclockwise.

1 Turn the lateral adjustment screw clockwise to reduce the gap between the doors. Make small adjustments.

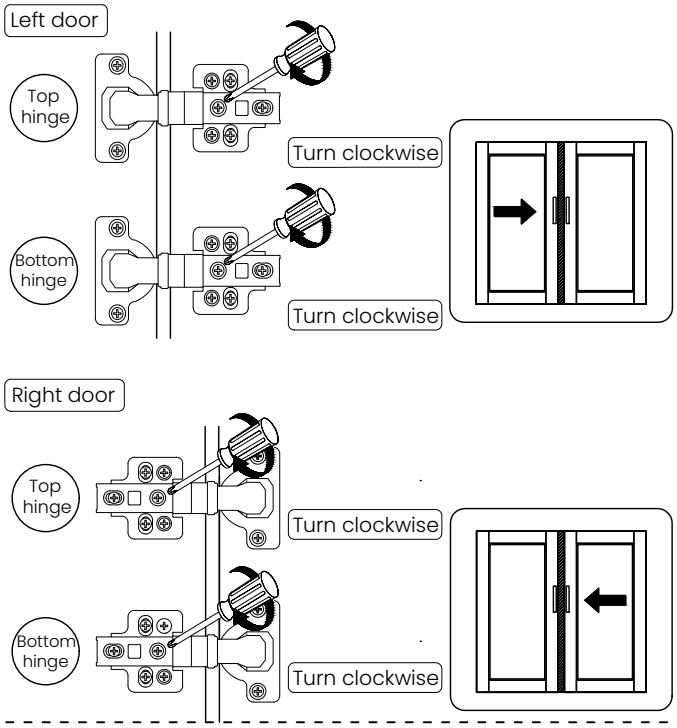

Vertical & Tilt Alignment

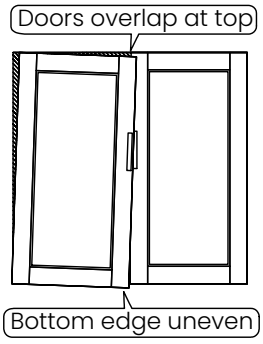



1 Turn the lateral adjustment screw counterclockwise to shift the top of the door away from the center.

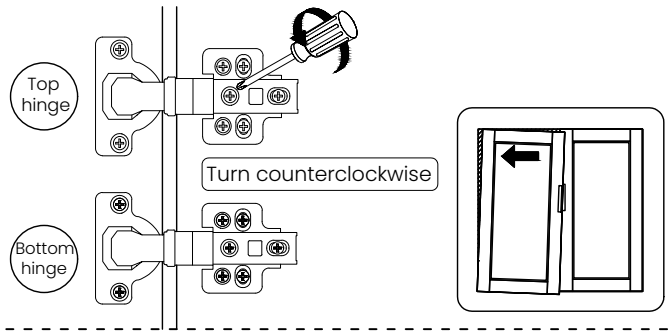

1 Turn the lateral adjustment screw counterclockwise to shift the bottom of the door away from the center.

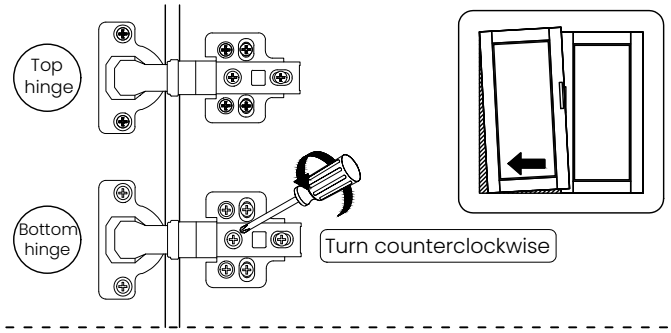

Vertical Door Alignment

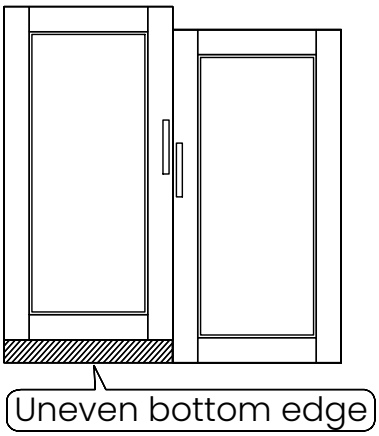

1 Loosen the mounting plate screws.

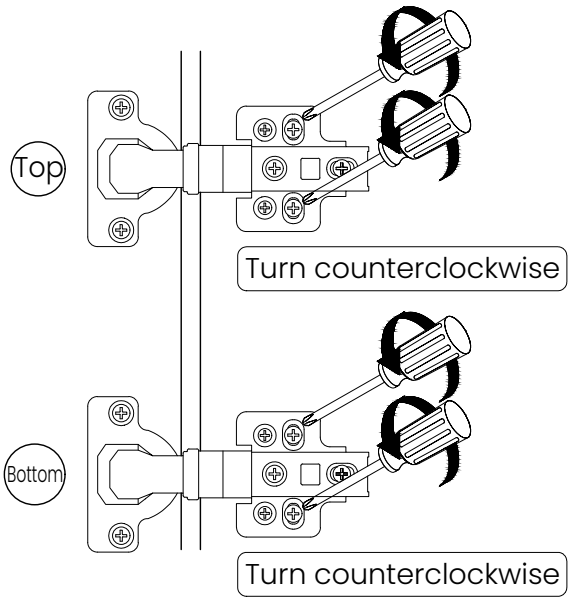

2 Slide the door down until it aligns with the adjacent door.

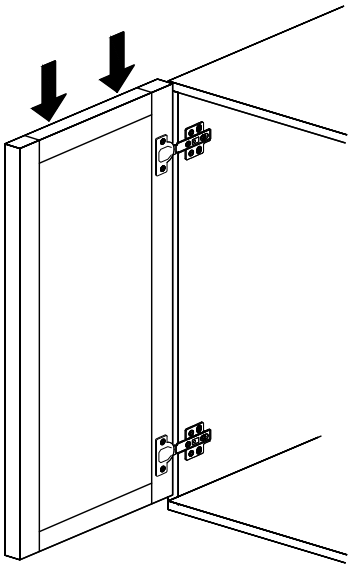

3 Tighten the mounting plate screws.

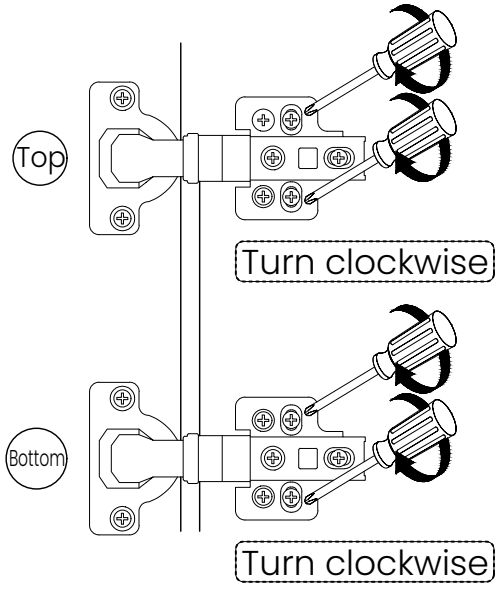

NOTE: If the door is too low, lift it upward during Step 2 to achieve proper alignment.