INSTRUCTIONS MANUAL

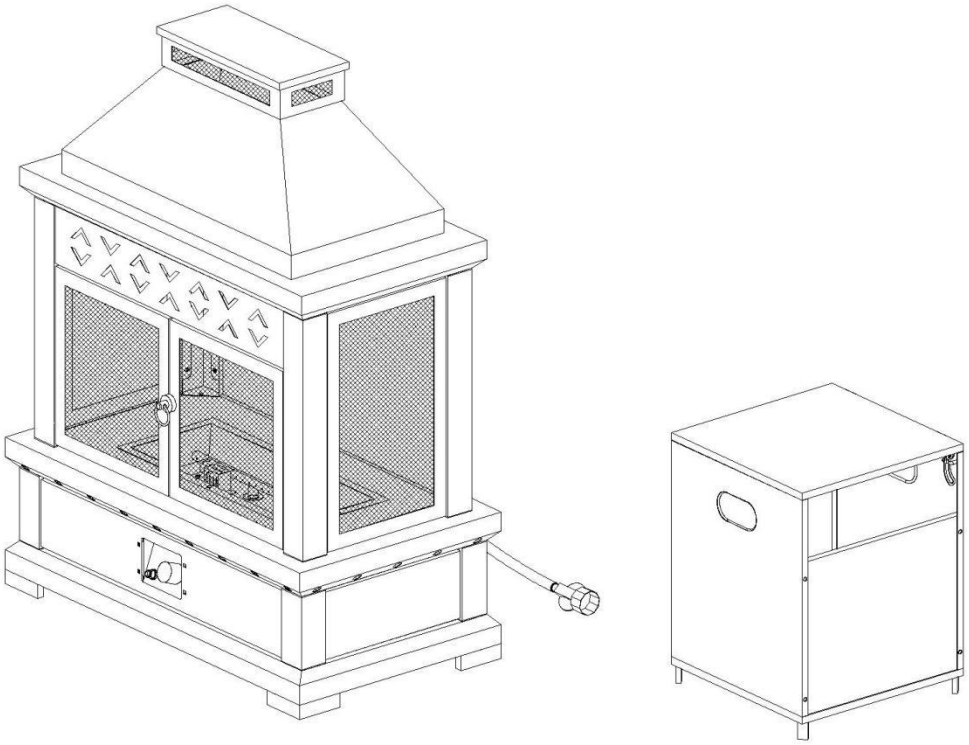

IF YOU PURCHASED THE PRODUCT ONLINE AND HAVE ANY QUESTIONS OR CONCERNS

PLEASE CONTACT US VIA EMAIL,TEXT,OR PHONE

Date of Manufacture: 26W32

WARNINGS AND CAUTIONS

Read the instructions before use. This appliance must be installed in accordance with such regulations as are enforced.

WARNING: Improper installation, adjustment, alteration, service or maintenance can cause injury or property damage. Read the installation, operation and maintenance instructions thoroughly before installing or servicing this equipment.

WHAT TO DO IF YOU SMELL GAS?

.Do not try to light the appliance.

.Do not touch any electrical switch; do not use any phone in the vicinity of this product.

.Immediately call your gas supplier from a neighbor's phone. Follow the gas supplier's instructions.

.If you cannot reach your gas supplier, call the fire department installation and service must be performed by a qualified installer, service agency or gas supplier.

WARNING: For Outdoor Use Only. Installation and service must be performed by a qualified installer, service agency, or the gas supplier.

WARNING: If the information in this manual is not followed exactly, a fire or explosion may result causing property damage, personal injury, or loss of life.

DANGER

CARBON MONOXIDE HAZARD

This appliance can produce carbon monoxide which has no odor.

Using it in an enclosed space can kill you.

Never use this appliance in an enclosed space such as a camper, tent, car or home.

DANGER

FIRE OR EXPLOSION HAZARD

If you smell gas:

.Shut off gas to the appliance.

.Extinguish any open flame.

.If odor continues, leave the area immediately.

.After leaving the area, call your gas supplier or fire department.

Failure to follow these instructions could result in fire or explosion, which could cause property damage, personal injury, or death.

INSTALLER: Leave this manual with the appliance.

CONSUMER: Retain this manual for future reference.

WARNING: If the information in this manual is not followed exactly, a fire or explosion may result causing property damage, personal injury, or loss of life.

WARNING: Do not store or use gasoline, or other flammable vapors and liquids, in the vicinity of this or any other appliance.

An LP-cylinder not connected for use shall not be stored in the vicinity of this or any other appliance.

The manual indicates the correct installation and use of the product for consumers, please keep it properly for future reference instructions.

SAFETY INFORMATION

Before you assemble or operate this unit, please carefully read this entire manual. Failure to do so may result in a fire explosion, injury or death.

⚠ WARNING:

- The installation of this unit must adhere to local codes or either the National Fuel Gas Code, ANSI Z223. 1/NFPA54, OR CAN/CGA-B149.1. National Gas and Propane Installation Code; or Propane Storage and Handling Code, CSA B149.2
- THIS UNIT IS INTENDED FOR OUTDOOR USE ONLY! This product shall be used outdoors, in a ventilated space and shall not be used in any enclosed area.
- **This unit is to be used with propane gas only! (sold separately)**
- Do not attach a remote gas supply to this unit.
- This unit is not intended for natural gas.
- Do not use any solid fuel or charcoal for this unit.
- When igniting, stay away from the burner as the flame will light up and may cause injury.
- LP GAS WARNING: Do not use any more than 1/4 in depth Lava rocks/Glass stones above the burner holes. Doing so will suffocate the flame.
- If the propane gas tank is leaking gas, you may hear, see, or smell a hiss. Do the following: 1. Disconnect the propane gas tank. 2. Do not attempt to fix the problem yourself. 3. Contact your gas supplier or fire department for help.
- Applying too much propane may result in gas pooling and will not burn. Allow fresh air into the unit so that the remaining gas may escape.
- Do not use a flame to check for gas leak.
- The max inlet supply pressure: max. Gas supply 11 in w.c. (2.74kPa).
- Use LP propane tanks with the following dimensions: ø 12 in, height 18 in, capacity 20 lbs.
- You must use a propane tank that has a collar to protect the gas valve.
- DO NOT fill tank over 80 percent full.
- The tank system must be set up for vapor withdrawal.
- Discontinue use if any part of the propane tank is damaged. Rust and dents may be hazardous and should be inspected by a gas supplier.
- Do not burn anything other than the provided materials for this fire table.
- Always ensure that Lava rocks/Glass stones are completely dry before use. Failure to do so will cause them to crack or pop.
- Do not operate unit until all parts are fully assembled.
- Do not paint or color any part of this heating unit.
- Unit may be hot while in use, do not attempt to move it while in use.
- Never leave this heating unit unattended while in use.
- This unit is not intended for cooking.
- Keep any flammable items away and do not use any other fireplace cover for this unit.
- Keep a safe distance to avoid burning skin or clothing.
- Do not sit or rest hands or feet on this heating unit.
- Never place hands or fingers on upper portion of this unit while in use.
- Keep all electrical cords and fuel supply hose away from heated surfaces.
- Combustible material should not be within 43 in of the top of the unit, or within 36 in around the entire unit.
- If the flame goes out while burning, turn the gas valve off. Wait 5 minutes before repeating the initial lighting procedure. Once you have a flame started, hold down the control knob for 1 minute.

SAFETY INFORMATION-CONTINUED

- Do not add water into the unit.
- Do not use this appliance if any part has been under water, Immediately call a qualified service technician to inspect the appliance and replace any part of the control system and any gas control which has been under water.
- Do not disconnect any part while unit is in use.
- Do not store a spare propane tank on or near this unit.
- If the heating unit is indoors, detach the propane tank and leave outdoors.
- Do not operate on a boat or vehicle. This unit must be used on a flat surface and outdoors only.
- Always remove protective cover before operating (if applicable).
- Do not set the protective cover over the unit until it is turned off and completely cooled down.
- Check for leaks after long-time unused.
- Children should never operate this unit. Children must be supervised while near this unit.
- Keep gas tank at least 5 ft. away from unit when lit (if external tank).
- The maximum gas supply pressure is 250psi.
- All installation and repair should be done by a qualified professional. This unit should be inspected annually and cleaned regularly.
- Inspect all elements of this heating unit before each use. If there is damage, the burner must be replaced.
- Keep the hose out from any pathways to eliminate any accidental damage. (if external tank)
- Be aware of the hazards of high temperatures and stay away from the unit to avoid any burns or injury.
- The gas supply tank should be constructed and marked with the specifications for the LP gas tanks of the U.S. Department of Transportation or the National Standard of Canada CAN/CSA-B339, LP gas tanks, spheres and tubes for Transportation of Dangerous Goods and Commission.
- The LP gas tank must have a listed overfilling prevention device and a QCC I or Type I, (CGA810) LP gas tank connection.
- This heating appliance should not be used on combustible plastic or artificial wood decks.
- Combustible material should not be within 43 inches of the top of the unit, or within 36 inches around the entire unit.
- Instructions to keep the appliance are clear and free from combustible materials, gasoline, and other flammable vapors and liquids.
- Do not use the heating unit without inspecting the hose. Prior to use if there are any signs of wear or abrasion you must replace the hose.
- For appliances complying with clauses 5.20.4 and 5.20.5, a diagram with dimensions showing the manufacturers recommended position of the appliance, its supply cylinder and hose routing shall be included. At a minimum, the diagram should be in a WARNING format including a warning about tipping hazard.
- Children and adults should be alerted to the hazards of high surface temperatures and should stay away to avoid burns or clothing ignition.
- Young children should be carefully supervised when they are in the area of the appliance.
- Clothing or other flammable materials should not be hung from appliance or placed on, in, or near the appliance.
- Any guard or other protective device removed for servicing the appliance shall be replaced prior to operating the appliance.

WARNINGS AND CAUTIONS

NOTE: PLEASE READ THE FOLLOWING SAFETY RULES.

WARNING:

The installation must conform with local codes or, in the absence of local codes, with the CAN/CGA-B 149.2, Propane Installation Code.
This appliance requires 20 lbs (9 kg) LP gas supply cylinder.
The burner must be replaced prior to the appliance being put into operation if it is evident that the burner is damaged. The replacement burner shall be that specified by the manufacturer.

Installation and repair should be done by a qualified service person. The appliance should be inspected before use and at least annually by a qualified service person.
More frequent cleaning may be required as necessary. It is imperative that control compartment burners and circulating air passageways of the appliance be kept clean.

Always place the appliance on a firm and level surface.
Do not burn solid fuels in this gas appliance.
Use the appliance outdoors in a well-ventilated space only, not in a building, garage, or any other enclosed area.
When using the appliance keep the appliance area clear and at least 50 inches from combustible materials, such as gasoline and other flammable liquid and vapors. Certain items or materials, when stored under the appliance or nearby, will be subjected to radiant neat and could be seriously damaged
Inspect the gas connections of appliance prior to each use. Do not operate the unit if there is gasoline and after flammable liquid and vapors. A qualified service person should inspect the appliance annually.

Alert children and adults to the hazards of high surface temperatures and keep them away to avoid burns or clothing ignition
Carefully supervise children and pets when they are near the appliance.
Replace guard or other protective device removed for servicing.
Do not hang clothing or other flammable materials on or near the appliance.

Do not use the appliance if any part has been under water. Immediately call a qualified service technician to inspect the appliance and to replace any part of the control system and any gas control which has been under water.
The LP-gas supply cylinder to be used must be: Constructed and marked in accordance with the Specifications for LP-gas cylinders of the U.S. Department of Transportation (DOT): or the Standard for Cylinders, Spheres and Tubes for Transportation of Dangerous Goods and Commission, CAN/CSA-B339, as applicable.

The LP-gas supply cylinder to be used must be provided with a listed overfilling prevention device; and provided with a cylinder connection device compatible with the connection for the appliance.

Use only a cylinder supply system arranged for vapor withdrawal, and the cylinder must include a collar to protect the cylinder valve.

WARNINGS AND CAUTIONS

NOTE: PLEASE READ THE FOLLOWING SAFETY RULES:
Perform a leak test with a soapy solution:
1. To check gas connections.
2. After connecting a new cylinder.
3. Upon re-assembly after disassembly.

This appliance is designed to operate with a standard 20 Ibs propane cylinder with Approved Cylinder Connection.

WARNING

This product can expose you to chemicals including lead, which is known to the State of California to cause and carbon monoxide, which is known to the State of California to cause birth defects or other reproductive harm. For more information, go to *www.P65Warnings.ca.gov*

SPECIFICATION

Certification	CSA
Rated Heat Input	50000BTU/HR
Fuel	LP
Gas Supply	20 LB (9kg) LP gas cylinder
Manifold Pressure	11”W.C.
Injector Size (diameter)	2.24mm
Gas Supply Pressure	Max. 250 psi. Min. 25 psi

Before the assembly of product, make sure all parts are present. If any part is missing or damaged, do not attempt to assemble the product. Contact customer service for replacement parts.

REMINDER

BEFORE ASSEMBLY

- Verify that all parts are included with your gas fire pit BEFORE you begin assembly by checking the Parts and Hardware List. For your convenience, some parts may be pre-assembled or attached to fire pit components.
- If all parts are not included, do not attempt to assemble fire pit. Call the toll free number on the cover page for replacement parts.
- Leave hardware installed HALF-TIGHTENED in the gas fire pit during assembly until unit is completely assembled, then finish tightening all screws.

YOUR OWNER’S MANUAL

- Keep and store this Owner’s Manual for future reference. It contains important instructions and procedures for safety and maintenance.

PACKAGE CONTENTS

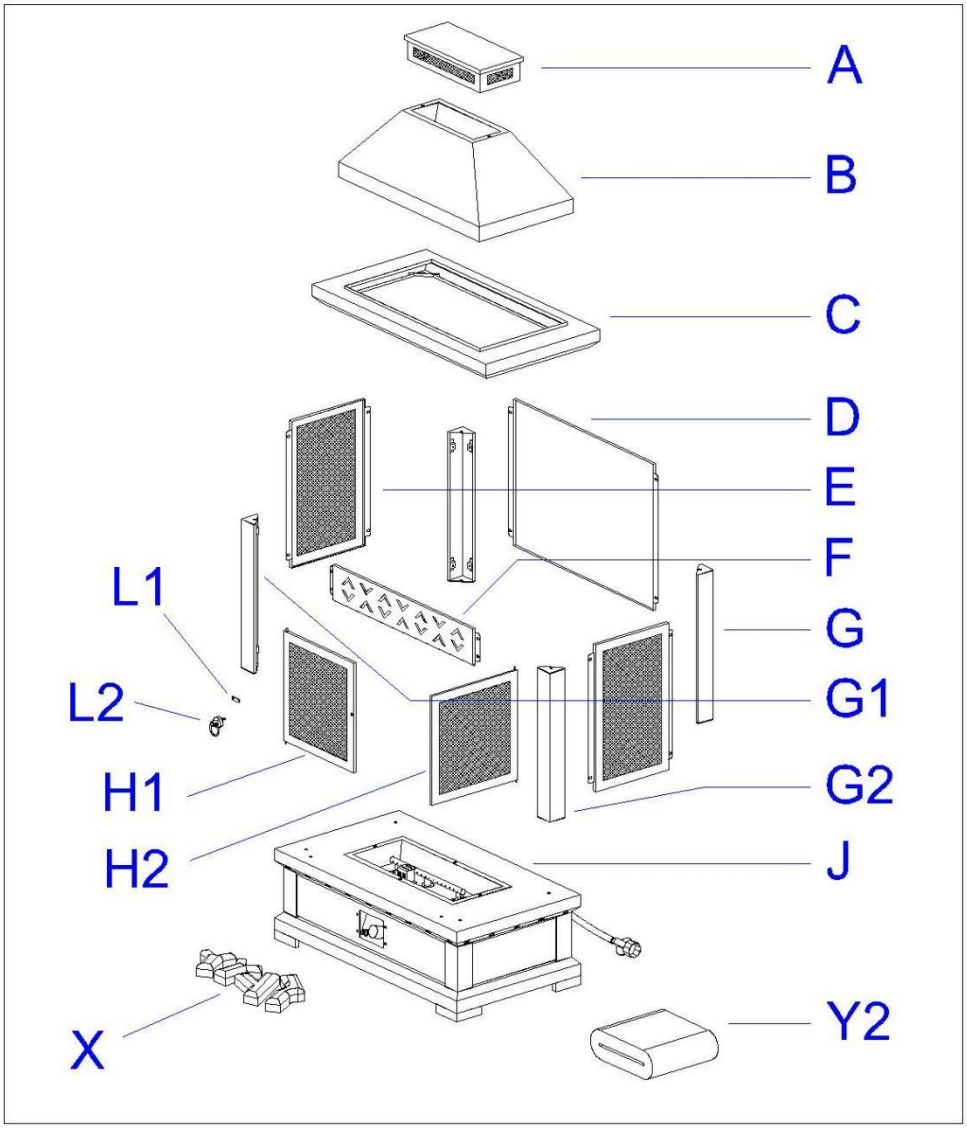

TOOLS NEEDED: (NOT INCLUDED)

Screwdriver

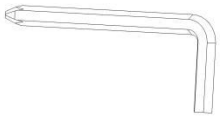

Estimated time for assembly: 30-45 minutes.

PACKAGE CONTENTS

A	Chimney Cover	1	
B	Chimney	1	
C	Middle Frame	1	
D	Back Screen Panel	1	
E	Side Screen Panel	2	
F	Decoration Panel	1	
G	Back Upright Column	2	
G1	Left Upright Column	1	

G2	Right Upright Column	1	
H1	Left Door	1	
H2	Right Door	1	
L1	Door Lock	1	
L2	Door Handle	1	
J	Base	1	
X	False Wood	5	
Y2	PVC Cover	1	

S1 (M6*12)	Bolt	26	
S2 (M6)	Washer	2	
S3 (M6)	Nut	1	
S4 (M6*12)	Carriage Bolt	4	silvery
S5 (M6)	Nut	4	silvery

ASSEMBLY INSTRUCTIONS

We recommend two persons for the assembly. Place some cardboard underneath to protect gas fire pit finish and assembly area.

ASSEMBLY INSTRUCTIONS

STEP 1

Note: the silver bolts (S4) and silver nuts (S5) used to install the control panel on the base (J).

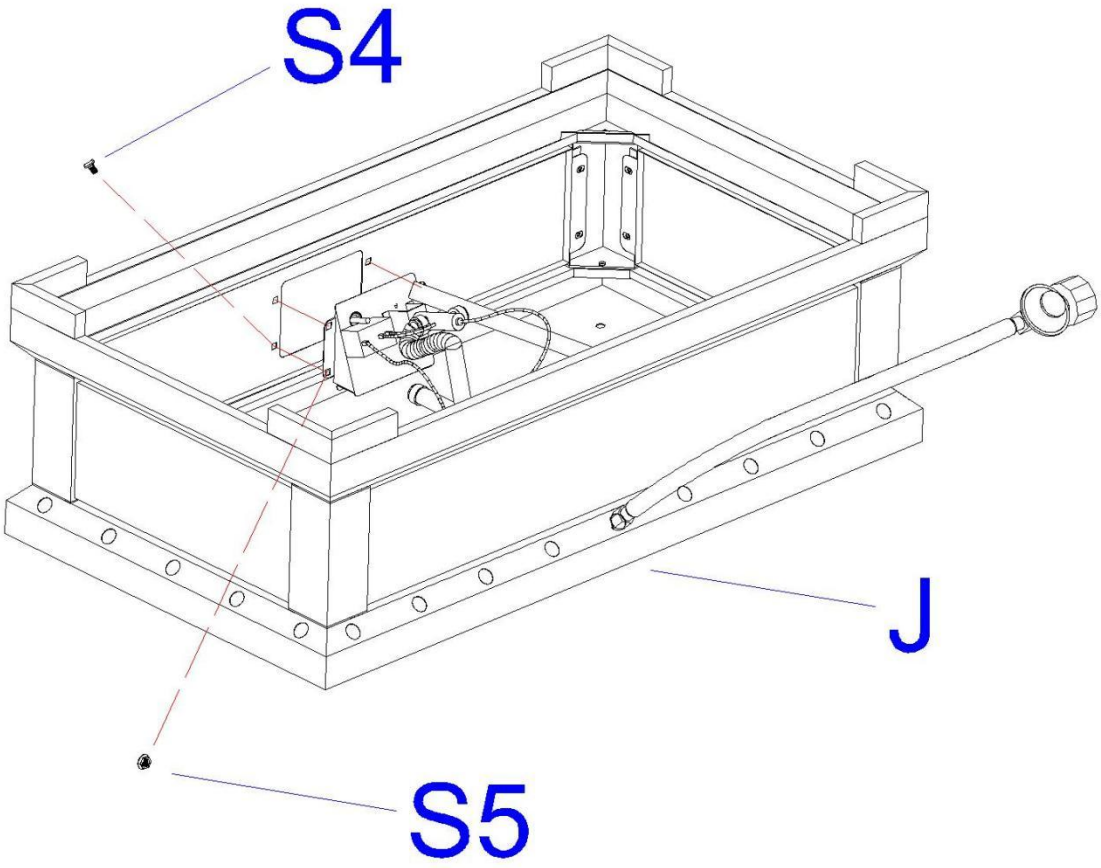

ASSEMBLY INSTRUCTIONS

STEP 2

Note: Don’t tighten all the bolts now.

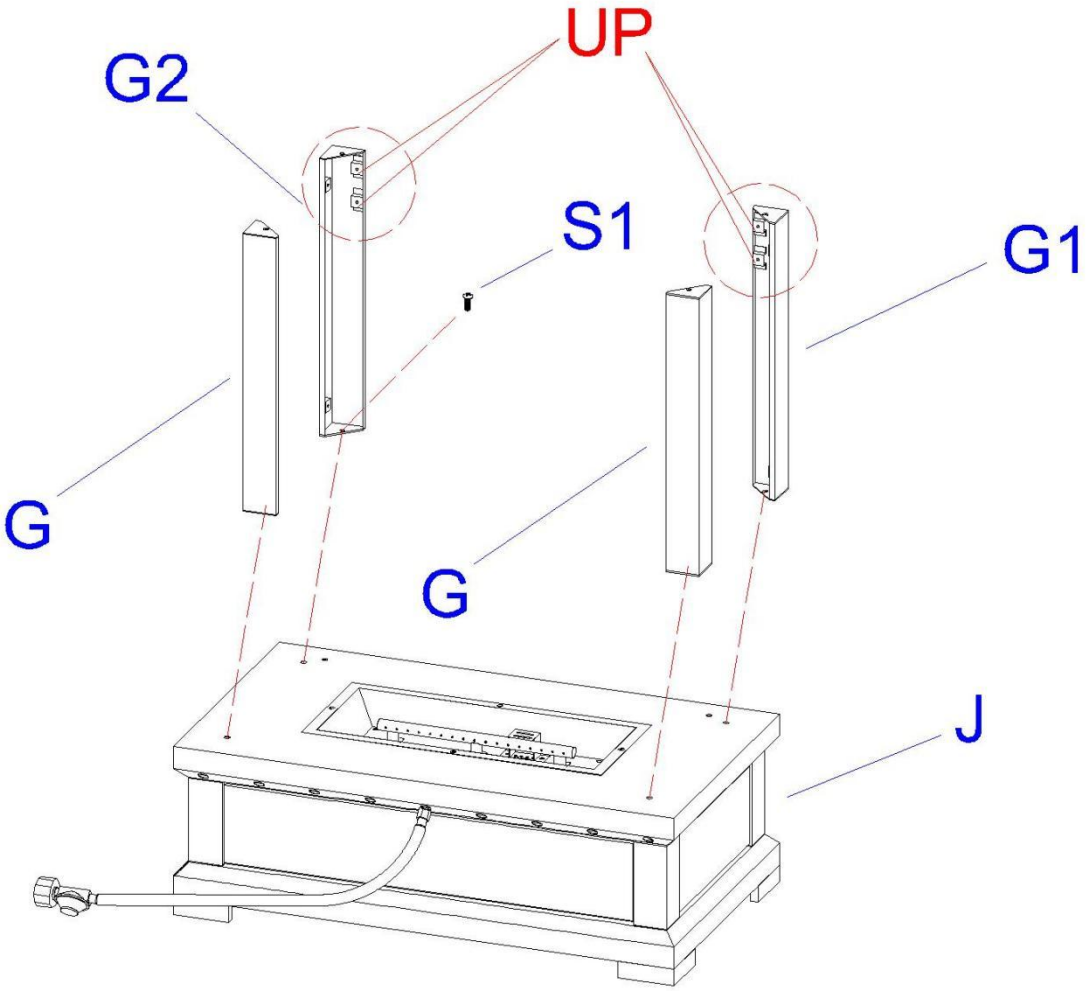

ASSEMBLY INSTRUCTIONS

STEP 3

Note: Don’t tighten all the bolts now.

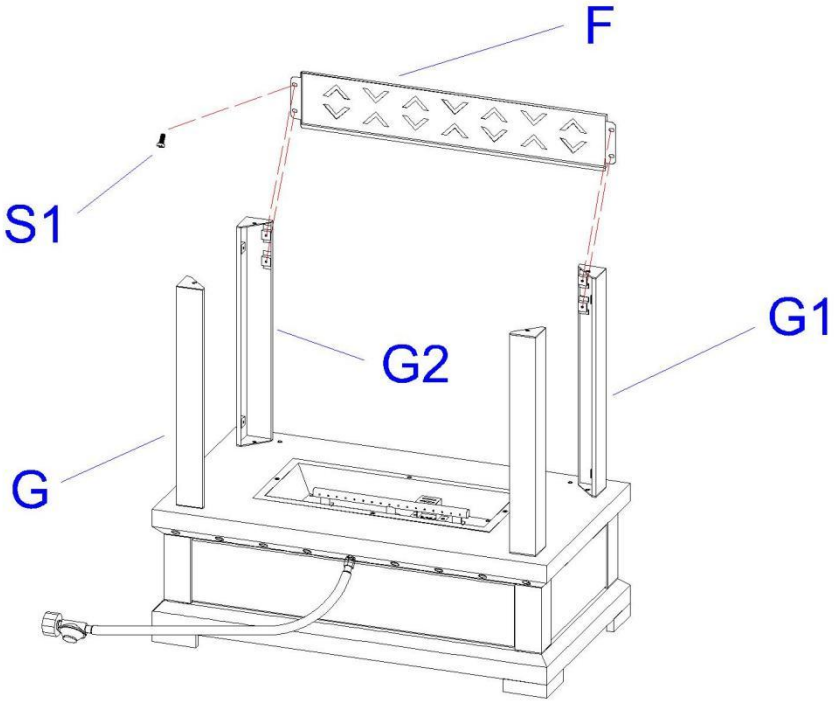

STEP 4

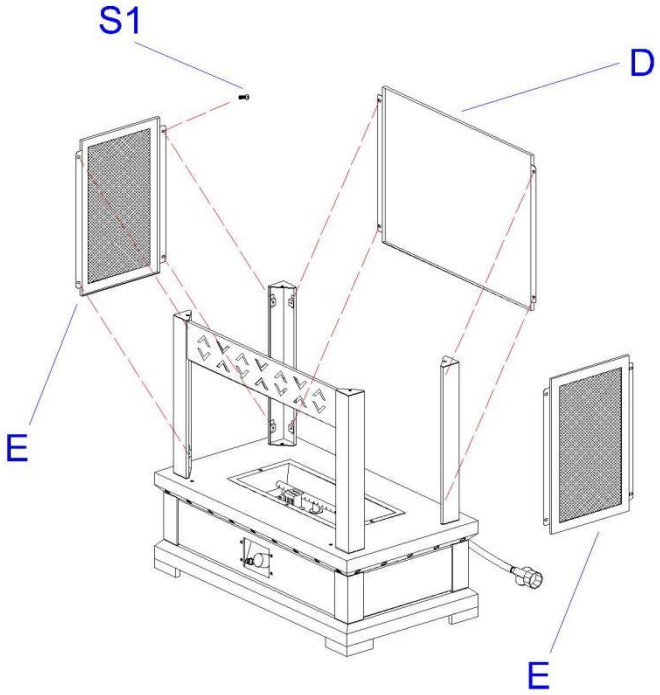

ASSEMBLY INSTRUCTIONS

STEP 5

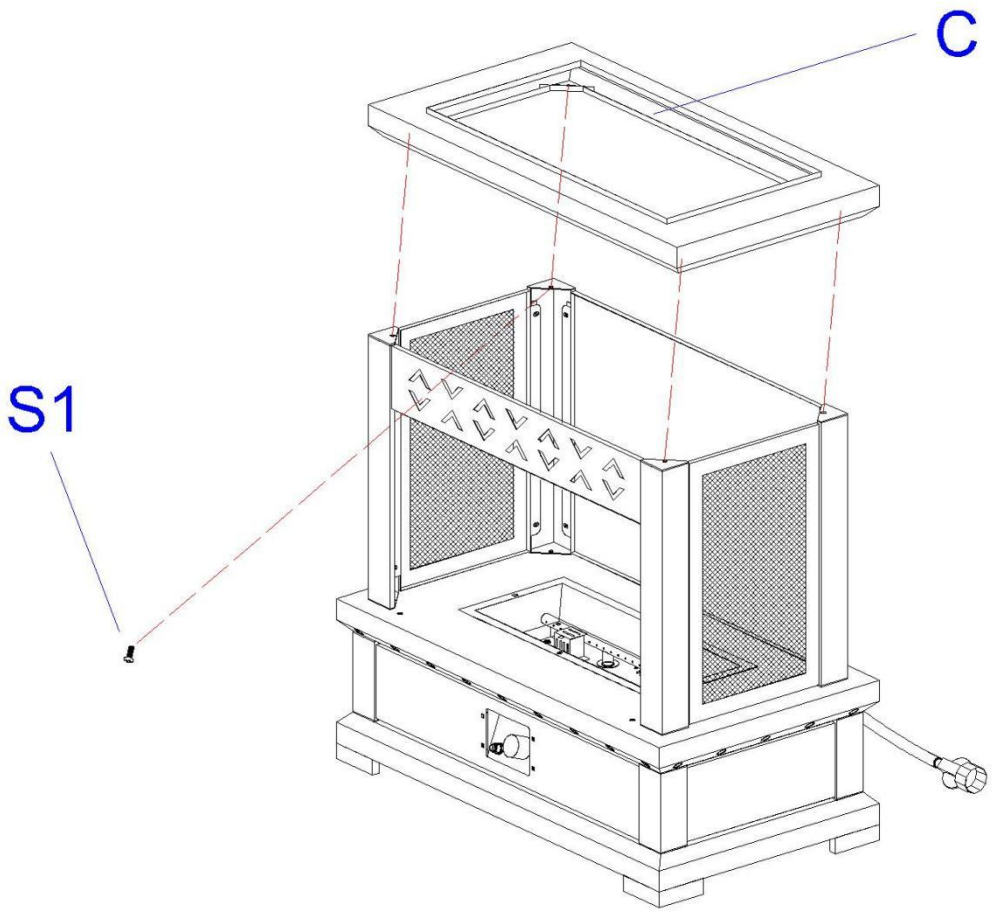

ASSEMBLY INSTRUCTIONS

STEP 6

Note: now you can tighten all bolts finally.

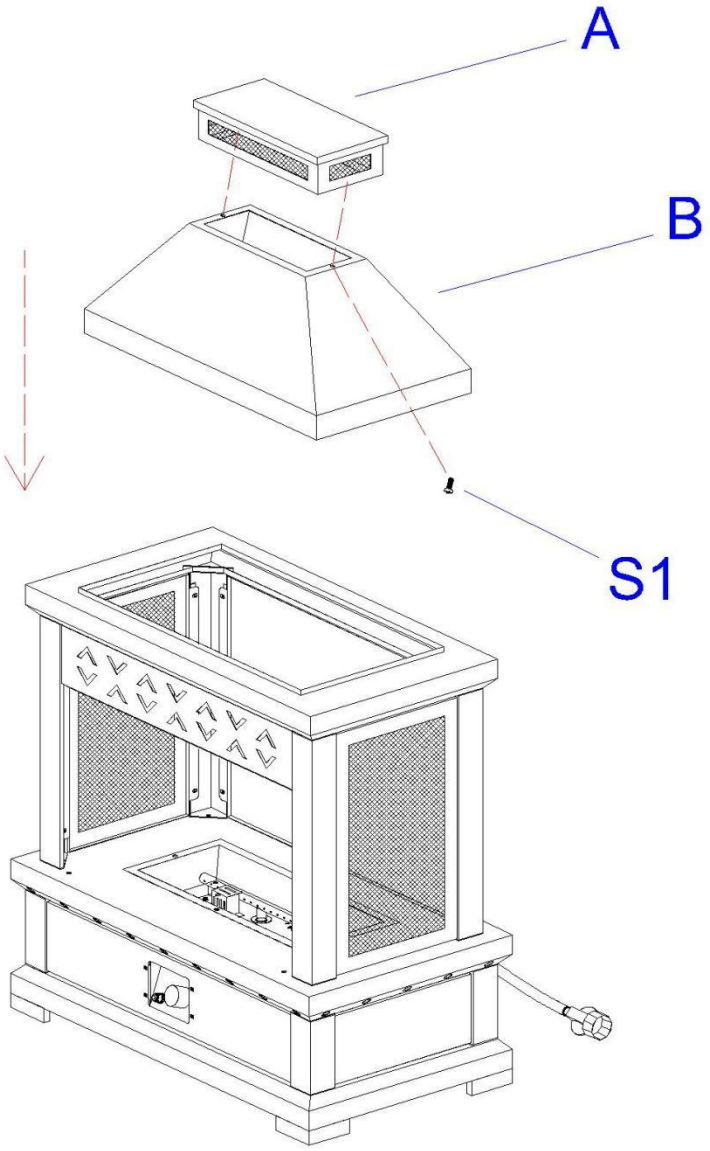

ASSEMBLY INSTRUCTIONS

STEP 7

Note: now you can tighten all bolts finally.

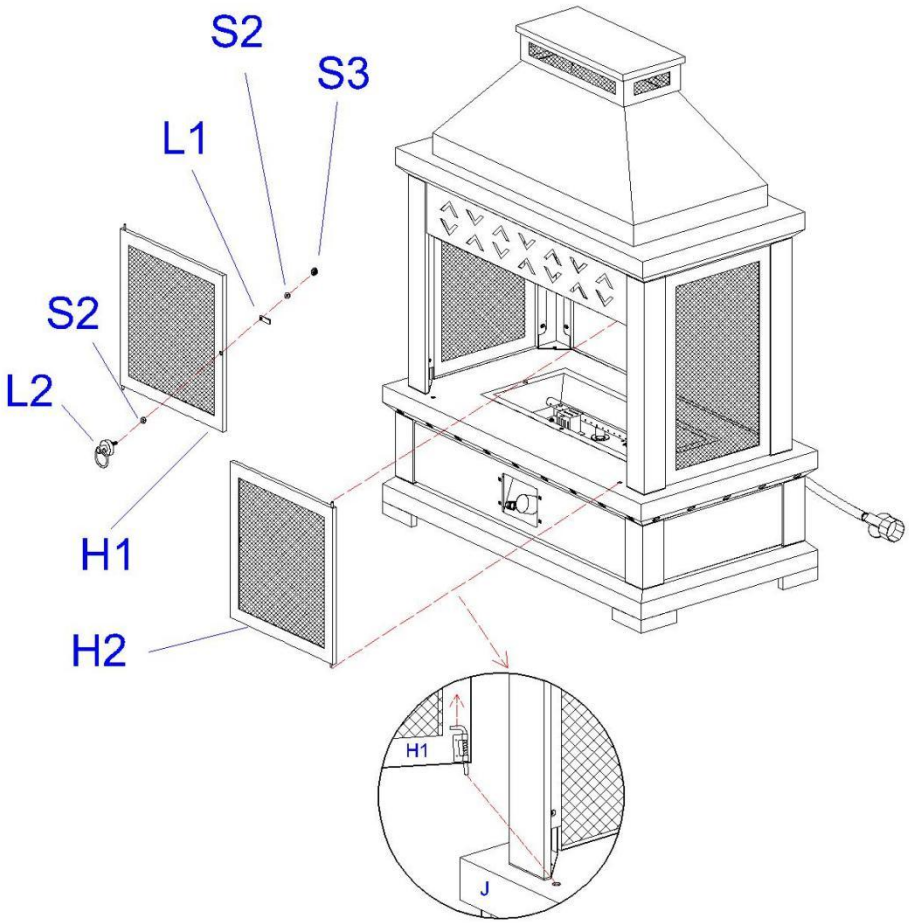

ASSEMBLY INSTRUCTIONS

STEP 8

Note: The False wood are placed on the burner, do not block the air hole.

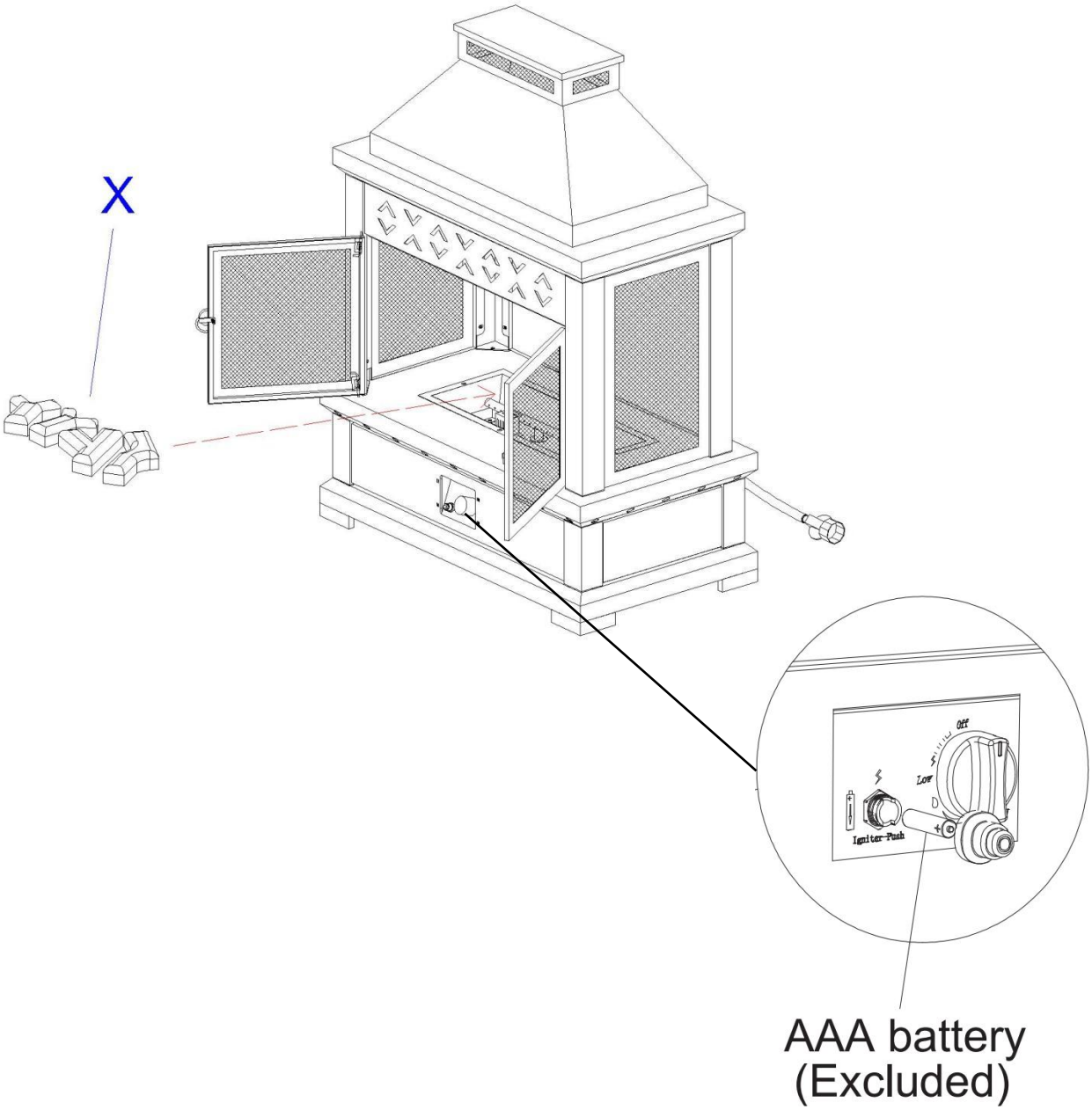

Warning

AAA batteries are not included, sold separately.

Please install batteries in accordance with the positive and negative polarity directions marked in the installation diagram.

ASSEMBLY INSTRUCTIONS

STEP 9

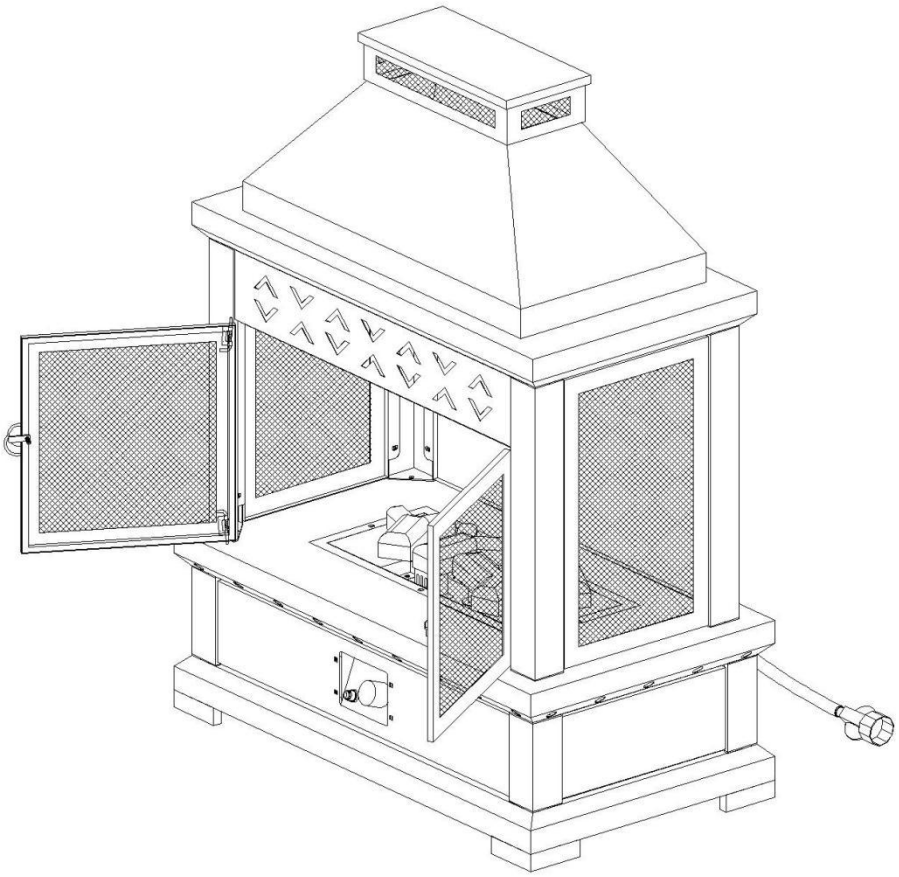

PACKAGE CONTENTS

Z1	Propane Tank Cover	1	
Z2	Back Panel	1	
Z3	Front Panel	1	
Z4	Side Panel	2	
Z5	Base	1	
Y1	PVC Cover	1	

SS1 (M6*25)	Bolt	4	
SS2 (M6*12)	Bolt	10	
SS3 (M6)	Nut	12	
SS4 (M6)	Cap Nut	2	
SS5 (M4*12)	Bolt	4	
SS6 (M4)	Nut	4	

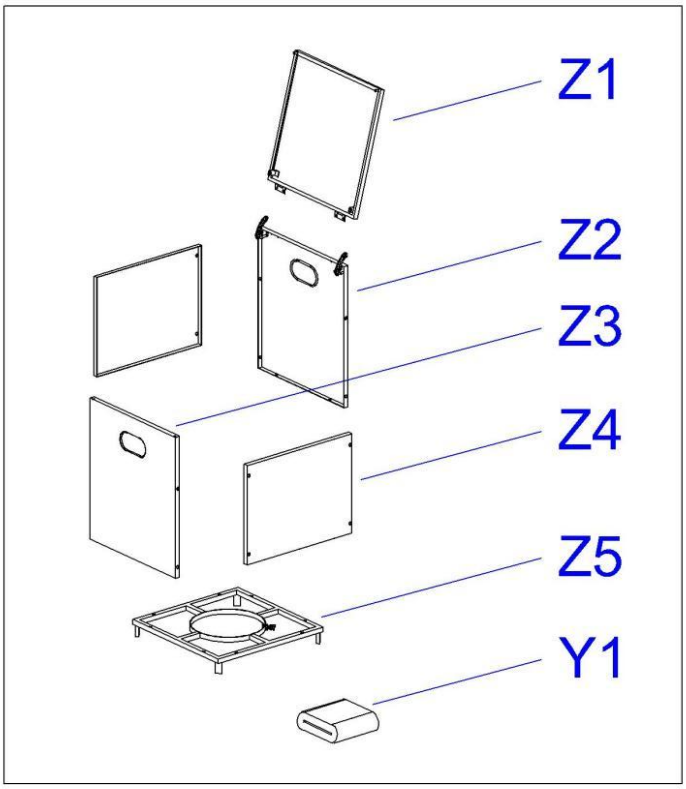

ASSEMBLY INSTRUCTIONS

STEP 1

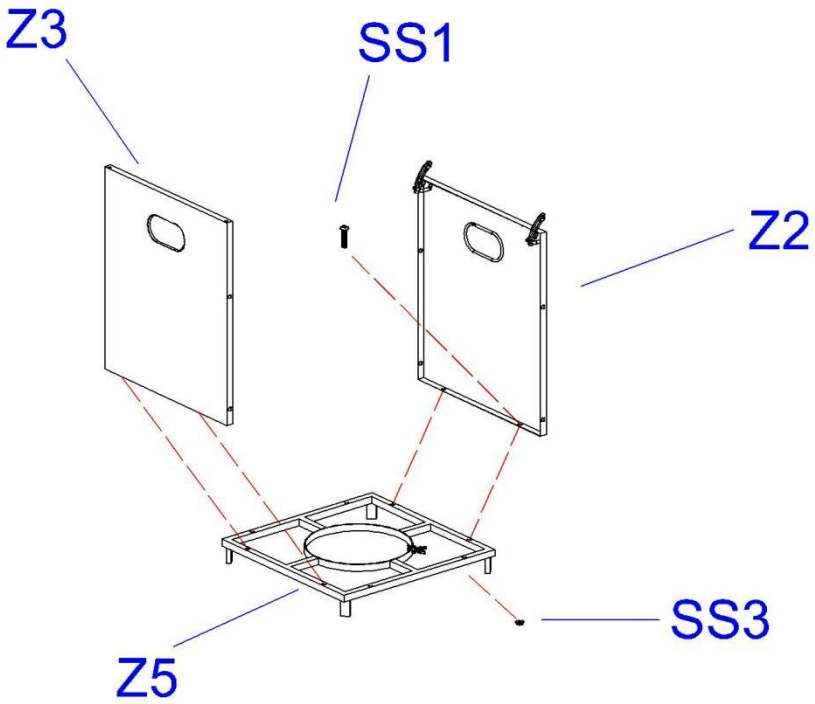

STEP 2

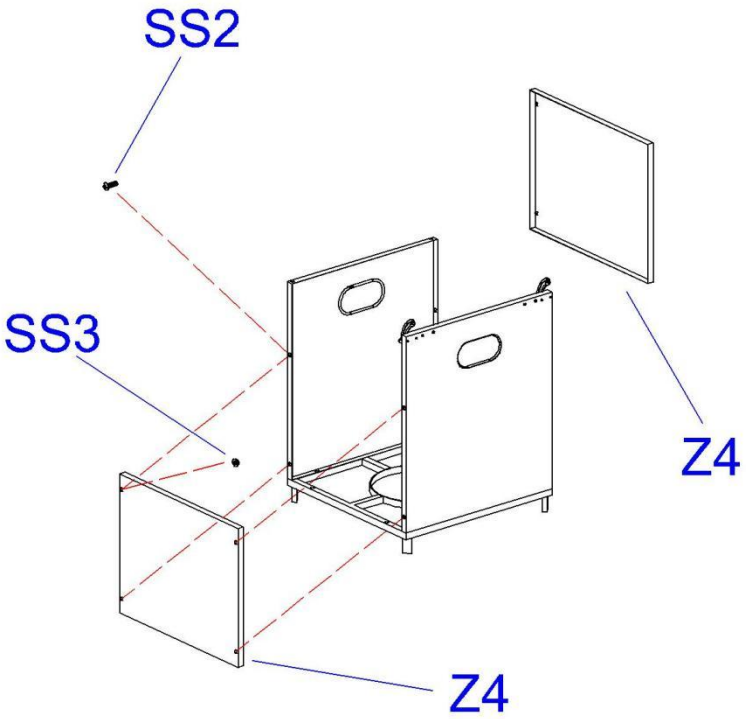

ASSEMBLY INSTRUCTIONS

STEP 3

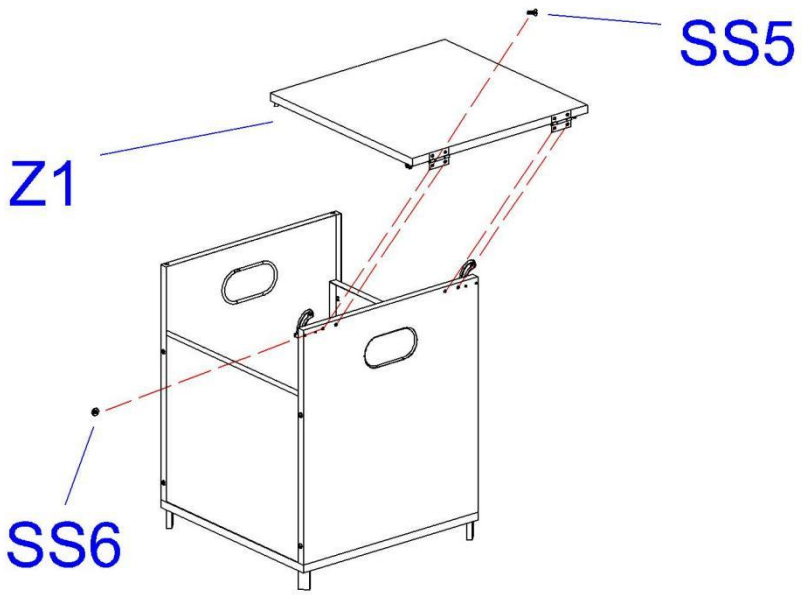

STEP 4

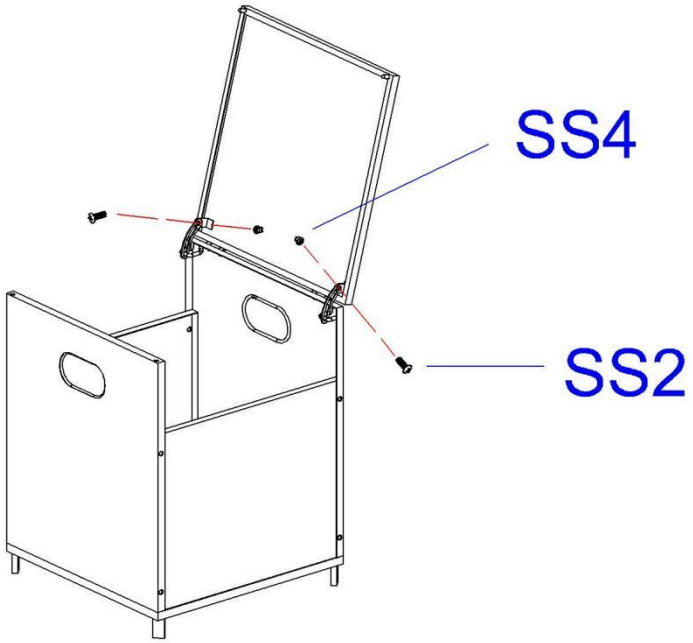

ASSEMBLY INSTRUCTIONS

STEP 5

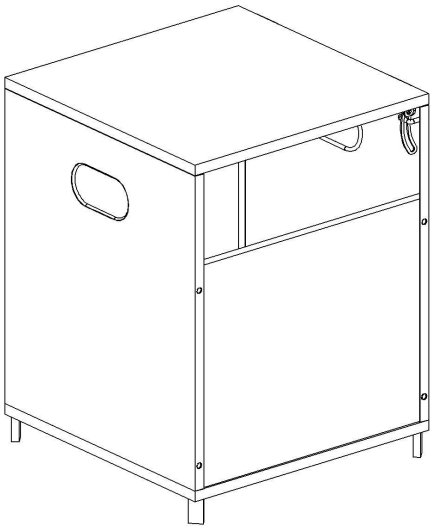

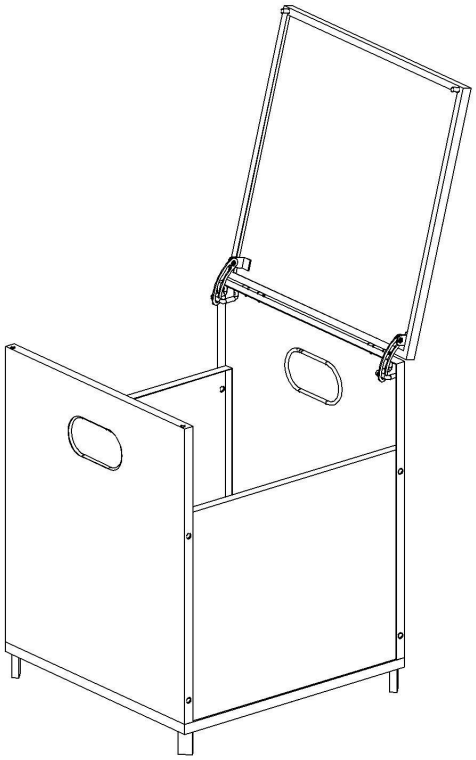

INSTALLATION INSTRUCTIONS

Installation

Two or more people are helpful for an easier installation.

Location

Your fire pit must be installed on flat, stable surface, away from any combustible materials or construction.

Notes

1. Place fire pit on any level, outdoor and non-combustible surface. NOTE: Do not place the appliance on grass or dirt. This may block the ventilation.
2. Pour the False wood (max 1.7 LB) onto the fire pit.
3. Open the door (J) and place cylinder in the holder assembly (Fig. 13).
4. Turn the cylinder locking bolt clockwise to secure the gas cylinder (Fig. 14).
5. Attach regulator to cylinder and turn clockwise by hand. (Fig. 15).
6. Check your fire pit for leaks before use (Fig.16).

Your gas fire pit has been checked at all connections at the factory for leakage. After transportation, some connections may have loosened. Follow these steps to check the hose regulator/cylinder connections:
Spoon or brush several drops (or use squirt bottle) of the solution onto hose/regulator/cylinder connection.
Turn on gas cylinder. Inspect the connections and look for bubbles.

1) If no bubbles appear, the connection is safe.
2) If bubbles appear, there is a leakage. Loosen and re-tighten this connection.
3) If there is still a leak, please contact customer.

Notes

1) The cylinder supply system must be arranged for vapor with draw.
2) The cylinder used must include a collar to protect the cylinder valve.

The hose assembly must be replaced prior to the appliance being put into operation if there is evidence of excessive abrasion or wear, or if the hose is damaged.
At least once a year, a complete inspection of the entire gas path components should be performed.
If it needs to replace parts, proceed to leak test after reassembly, which should be performed by a professional technician.

Fig-13

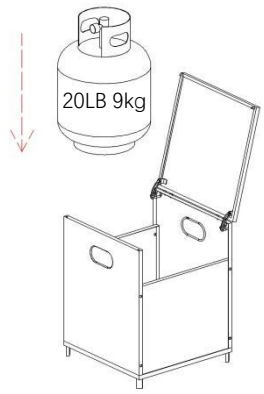

Fig-14

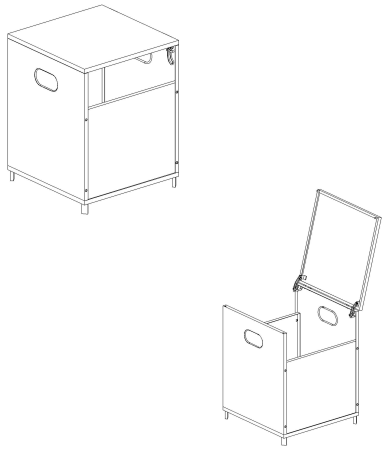

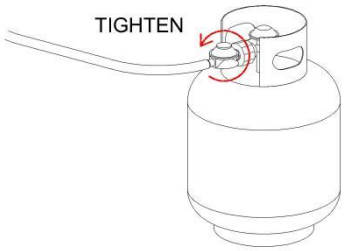

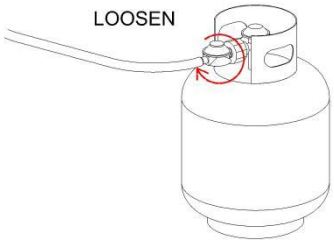

OPERATION

Steps to remove the gas cylinder:

1. Close the cylinder valve door handle clockwise to cut off the air source.
2. Turn the QCC counterclockwise to disconnect.
3. Rotate the fixing screw under the gas cylinder in reverse time to turn the gas. The bottle was removed from the cylinder rack.

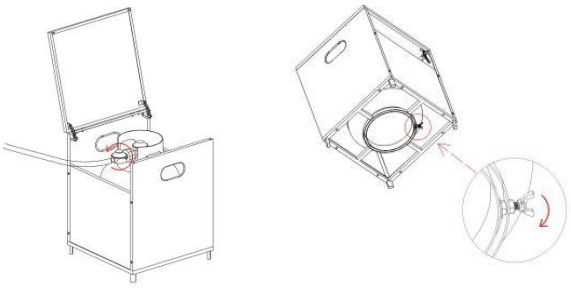

WARNING: DO NOT ATTEMPT TO OPERATE THE APPLIANCE UNTIL YOU HAVE READ AND UNDERSTAND ALL PRECAUTIONS EAULURE TO DO SO CAN RESULT IN PROPERTY DAMAGE, SERIOUS INJURY, OR DEATH.

WARNING!!!

Do not use an open flame to check for leakage.
Do not smoke during testing.
Do not test indoors.
A leak check must be performed whenever the gas cylinder is replaced.

NOTE：

Use only the pressure regulator supplied with this fire pit. Replace them with those specified by the manufacturer only.

WARNING

FOR YOUR SAFETY
If at any time you are unable to light burner and smell gas, wait 5 minutes to allow gas to dissipate before attempting to light gas appliance. If after 1 minute, you are unable to light burner, wait 5 minutes and allow flammable vapors to dissipate before attempting to light gas appliance.

Before turning gas supply ON

- Your fire pit is designed and approved for OUTDOOR USE ONLY.
- DO NOT use it inside a building or any other enclosed area.
- Make sure surrounding areas are free of combustible materials, gasoline, and other flammable vapors or liquids.
- Ensure that there is no obstruction to air ventilation.
- Be sure all gas connections are tight and there are no leaks.
- Be sure the access panel is clear of debris.
- Be sure any component removed during assembly or servicing is replaced and fastened prior to starting.

WARNING

FOR YOUR SAFETY
DO NOT touch or move gas appliance for at least 45 minutes after use.

WARNING

Lighting operations should comply with Lighting Instruction section. Improper lighting operations will cause serious injury and explosion.

OPERATION

WARNING: DO NOT ATTEMDT TO OPERATE THE APPLIANCE UNTIL YOU HAVE READ AND UNDERSTAND ALL PRECAUTIONS. FAILURE TO DO SO CAN RESULT IN PROPERTY DAMAGE SERIOUS INJURY OR DEATH.

Before Lighting

The gas fire pit should be thoroughly inspected before each use and by a qualified service person at least annually. If relighting a hot gas fire pit, always wait at least 5 minutes.

Lighting Instructions

1. Make sure control knob is in the "OFF" position.
2. Turn LP cylinder gas valve to fully open position.
3. Push and hold in the electronic ignite to create sparks within the electrode, continue to hold. Press down control knob and turn it counter clockwise to "MIN" position, this will light the burner.
4. If the burner is not lit immediately (within 5 seconds), press down the control knob and turn clockwise to "OFF" position. Repeat from step 3 after 5 minutes.
5. When burner is lit, turn the control knob to desired heat output position between "MIN" and "MAX".

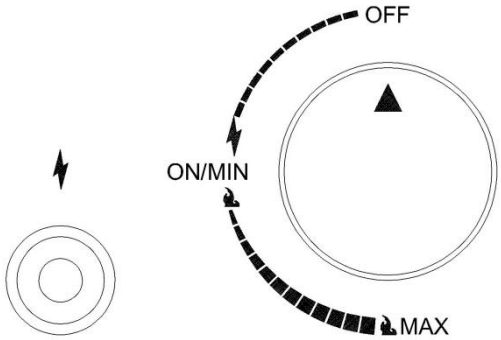

Flame Characteristic

- Normally the burner flame is yellow.
- If the burner flame is blue and very small, please check the gas cylinder, as it may be low gas pressure or empty. If there is enough gas in the cylinder please contact customer service.
- If flames lift away from burner or backfire happens or produce thick black smoke the fire pit should be turned off immediately.
- The fire pit should not be operated again until the unit is serviced and/or repaired by a qualified service technician.

OPERATION

CAUTION: AVOID INHALING FUMES EMITTED FROM THE GAS APPLIANCE'S FIRST USE. SMOKE AND ODOR FROM THE BURNING OF OILS USED IN MANUFACTURING WILL APPEAR. BOTH SMOKE AND ODOR WILL DISSIPATE AFTER APPROXIMATELY 30 MINUTES. THE GAS APPLIANCE SHOULD NOT PRODUCE THICK BLACK SMOKE.

NOTE:
The burner may be noisy when initially turned on. To eliminate excessive noise from the burner, turn the control knob to the "MIN" position. Then, turn the knob to the level of heat desired.

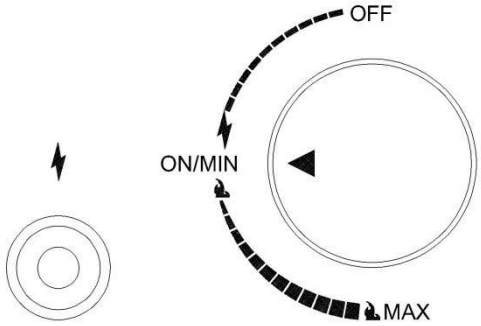

Operation pressure checked:
If the flame is very small this is because the supply pressure is not enough. Please refill gas cylinder.

Re-light
1) Turn the control knob to "OFF" position.
2) Wait five minutes before attempting to relight appliance.
3) Repeat steps beginning with step 3 of the lighting instruction.

Shut down instructions:
1) Push in and turn control knob clockwise to "OFF" position.
2) Turn LP cylinder gas valve clockwise to "OFF" position when appliance is not in use.

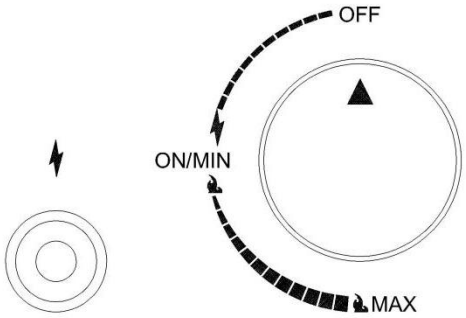

The Event of Gas Leakage:
1) Turn the control knob to "OFF" position.
2) Turn LP cylinder valve to "OFF" position.
3) Wait 5 minutes to allow gas to dissipate.
4) If odor continues, immediately call gas supplier.

WARNING: Gas appliance will be hot after use. Handle with extreme care.

LOCATING FIRE PLACE FOR USE

CAUTION: WHEN CERTAIN MATERIAIS OR ITEMS ARE LEFT AROVE BESIDE OR UNDER THIS APPLICANCE WHILE IN USE THEY WILL BE SUBJECT TO RADIANT HEAT AND COULD BE SERIOUSLY DAMAGED.

This gas fire pit is primarily used for the heating of outdoor patios, decks, spas, pools and open working areas.

Always make sure that adequate fresh air ventilation is provided. Follow the spacing to learn shown in Fig. 17 at all the time.

This gas fire pit must be placed on level firm ground.

Never operate in an explosive atmosphere, keep away from areas where gasoline or other flammable liquids or vapors are stored or used.

WARNING: Failure to position the parts in accordance with these diagrams or failure to use only parts specifically approved with this appliance may result in property damage or personal injury.

Clearances to combustible surfaces: Sides - 48 in.; Top - 37 in
WARNING: Locate the hose out of pathways where people may trip over it or in areas where the hose may be subject to accidental damage.

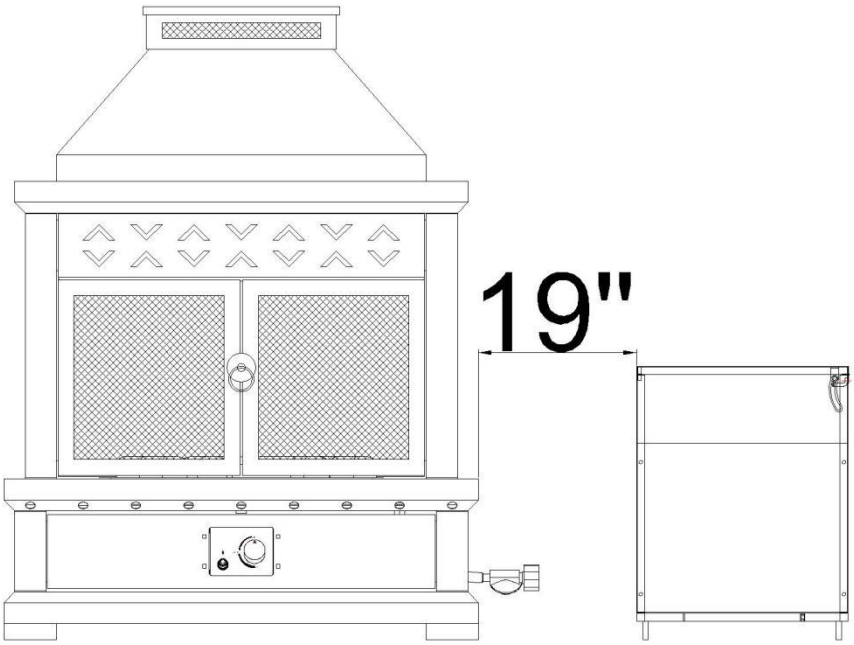

MAINTENANCE AND STORAGE

1. To enjoy years of outstanding performance from your gas fire pit, make sure you perform the following maintenance activities on a regular basis:

- Keep exterior surfaces clean.
- Use warm soapy water for cleaning.
- Never use flammable of corrosive cleaning agents.

2. While washing your unit, be sure to keep the area around the burner dry at all times. If the gas control is exposed to water in any way, do NOT try to use it. It must be replaced.

3. Keep the appliance area free and clean from combustible materials, gasoline and other flammable vapors and liquids; not obstructing the flow of combustion and ventilation air, keeping the ventilation opening(s) of the cylinder enclosure free and clear from debris.

4. Check if there are cracks or worn sections on the hose. If yes, please call our customer service to replace hose.

5. At least once a year, the unit should be inspected for the presence of spiders, spider webs or other insects.

6. Air flow must be unobstructed. Keep controls, burner, and circulating air passageways clean.

Signs of possible blockage include:

- Gas fire pit does NOT reach the desired temperature.
- Gas fire pit glow is excessively uneven.
- Gas fire pit makes popping noises.

7. Spiders and insects can nest in burner or orifices. This dangerous condition can damage gas fire pit and render it unsafe for use. Clean burner holes by using a heavy-duty pipe cleaner. Compressed air may help clear away smaller particles.

WARNING

FOR YOUR SAFETY

DO NOT touch or moue any appliance for at least 45 minutes after use. Allow all burner elements to cool before touching.

NOTE

In a salty-air environment such as ocean nearby, corrosion occurs more quickly than normal. Frequently check for corroded areas and repair them promptly.

MAINTENANCE AND STORAGE

Store the fire pit indoors during the winter if it will be subjected to freezing temperatures.

Disconnect and remove the cylinder from the appliance before the appliance can be stored indoors.

STORAGE

Turn the control knob to "OFF" position.

Turn LP cylinder to OFF position.

Allow at least 45 minutes for the fire place to cool down after use then disconnect and remove the cylinder.

Cylinder must be stored outdoors in a well-ventilated area out of the reach of children. When the cylinder is disconnected, tightly install the threaded valve plugs, and do not store it in a building garage or any other closed area.

You may store product indoors ONLY if the cylinder is disconnected and removed.

Keep the fire pit area clear and free from combustible materials such as gasoline and other flammable vapors and liquids.

If you do not use a cover, store this outdoor fire place in a dry location to maximize product life.

Store gas fire place in an area sheltered from direct contact with inclement weather (such as rain, sleet, hail, snow, dust and debris).

A qualified service person should install and repair the fire place and inspect it annually.

It might be necessary to clean this fire place frequently. You must keep the control compartment, burner and circulating air passageways clean.

TROUBLE SHOOTING

PROBLEM OBSERVED	POSSIBLE CAUSE	CORRECTIVE MEASURES
Gas odor	Gas leak	Check all gas connections
Delayed ignition	Low gas pressure. Clogged or dirty burner ports.	Check gas supply pressure. Clean burner parts--see manual. "CLEANING AND MAINTENANCE" section.
Incorrect burner Flame	Incorrect gas supply or pressure. Clogged or dirty burner ports.	Check gas supply pressure. Clean burner parts.
Ignition failure	The distance between electrode Ignition pin and flame orifice is too far.	Adjust the distance to 4-5mm

LIMITED ONE YEAR WARRANTY

What is covered under this warranty?

This product is covered under the Manufacturers Limited Warranty. To ensure your complete satisfaction, this warrants to the original purchaser that this furniture is free from defects in material and workmanship as of the date of purchase and that it will, under normal use and proper care, remain so for one year after the date of purchase. Replacement of missing or initially defective parts will be sent at no charge for a period of 10 days from date of purchase The manufacturer and retailer will not be responsible for missing parts and/or hardware after10 days from date from date of purchase.

Warranty does not cover

Freight and packaging charges to and from our customer service center remain the customer's responsibility. Labor or material charges to remove or replace parts are not covered under this warranty. Any floor sample sales or clearance sales from the store are not covered by this warranty. Furniture used for commercial purposes; failures caused by improper care; unreasonable or abusive use; damage by modification or alteration; freeze damage; acts of nature; rust; fabric stains; ripping or fading; purchased parts; or return freight and packaging charges are not covered under this warranty. Proof of purchase (dated register receipt) is required for warranty claims.