- Please check your product packaging to make sure the included accessories are in the “list of standard accessories”. If any parts are missing, please contact your local dealer immediately.
- Do not allow any sharp objects to come in contact with the cabinet, as it will scratch the surface.
- Continuous and prolonged exposure to direct sunlight may cause discoloration to the wood.
- Do not put any hot appliances directly on or near the cabinet.
- Please avoid using cleaning products that contain bleach or ammonia.
- Wood surfaces should only be cleaned with wood care products such as soapy water or furniture polish.

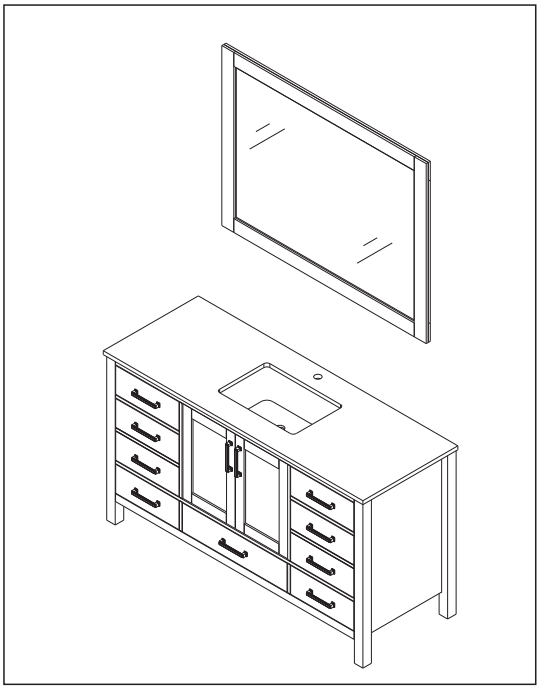

INSTALLATION

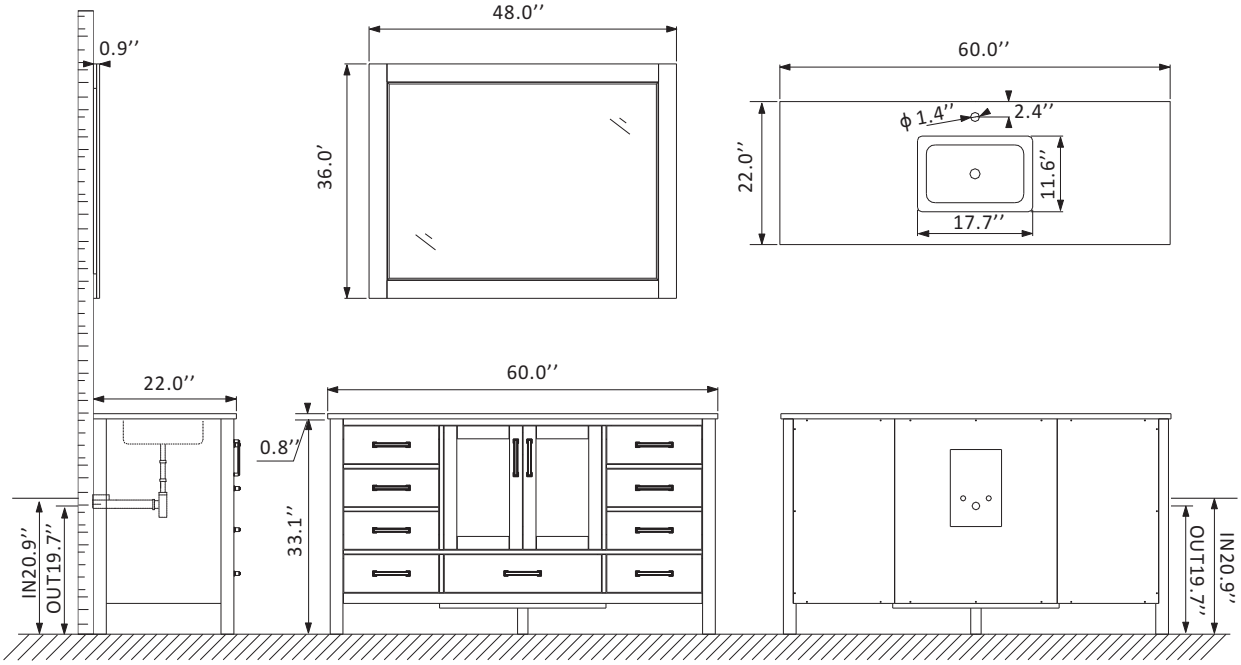

MAIN BODY PARTS

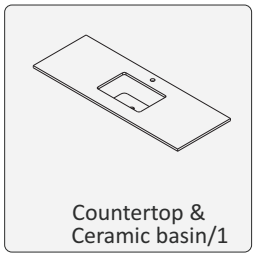

Countertop &
Ceramic basin/1

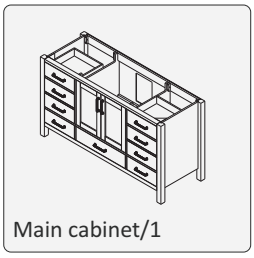

Main cabinet/1

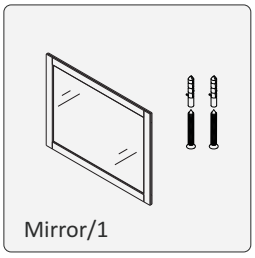

Mirror/1

INSTALLATION PARTS

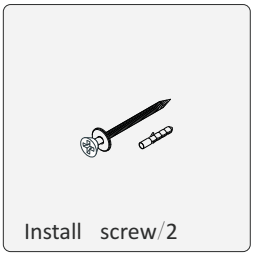

Install screw/2

ERECTING TOOL

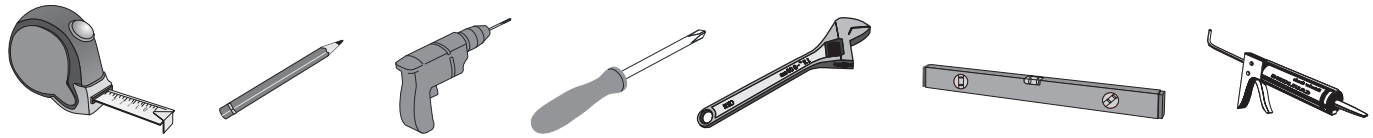

INSTALL, REMOVE, ADJUSTOF TOP FAST LOADING HINGE

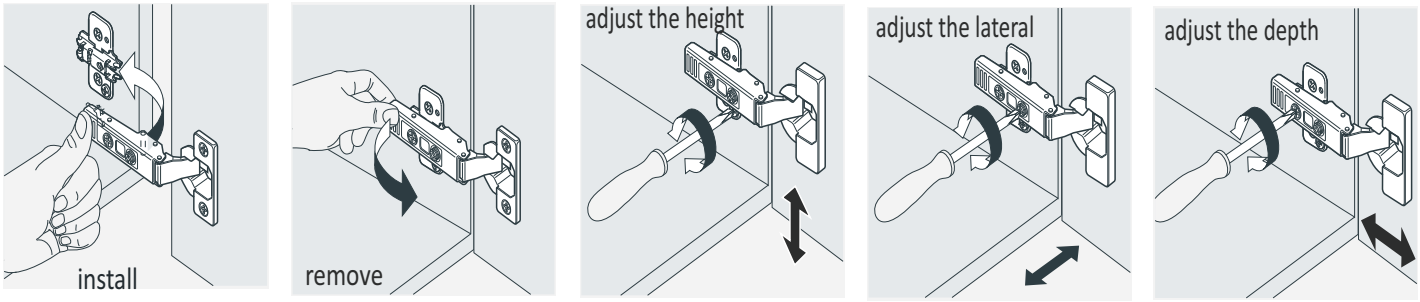

DRAWER'S ADJUST

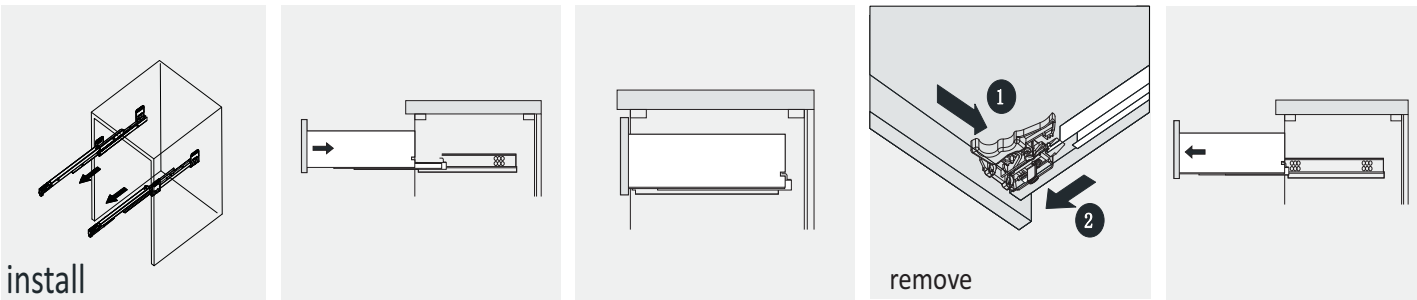

INSTALLATION INSTRUCTIONS

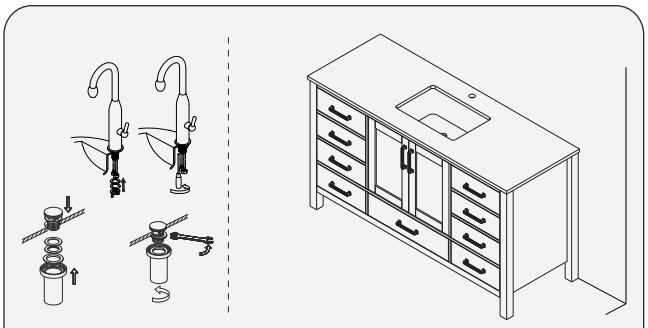

① Install pop-up, faucet and basin.

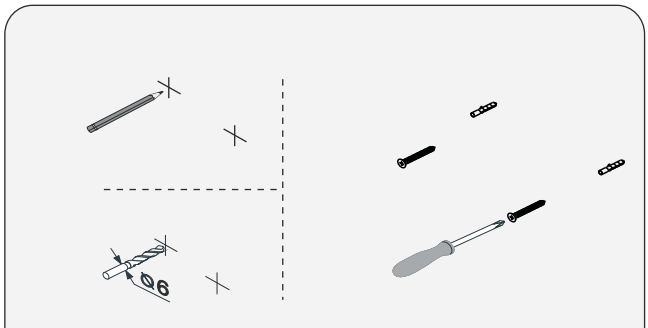

② Fix the mirror

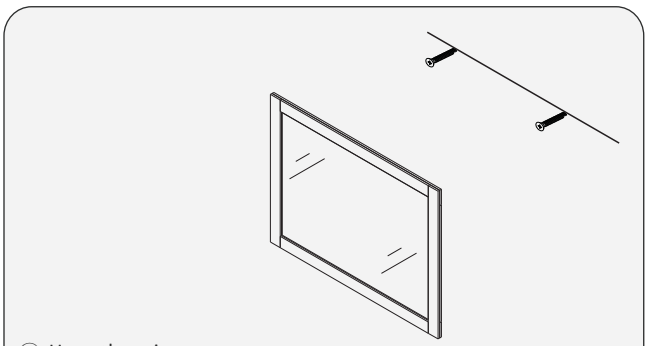

③ Hang the mirror