ASSEMBLY, CARE & USE INSTRUCTIONS

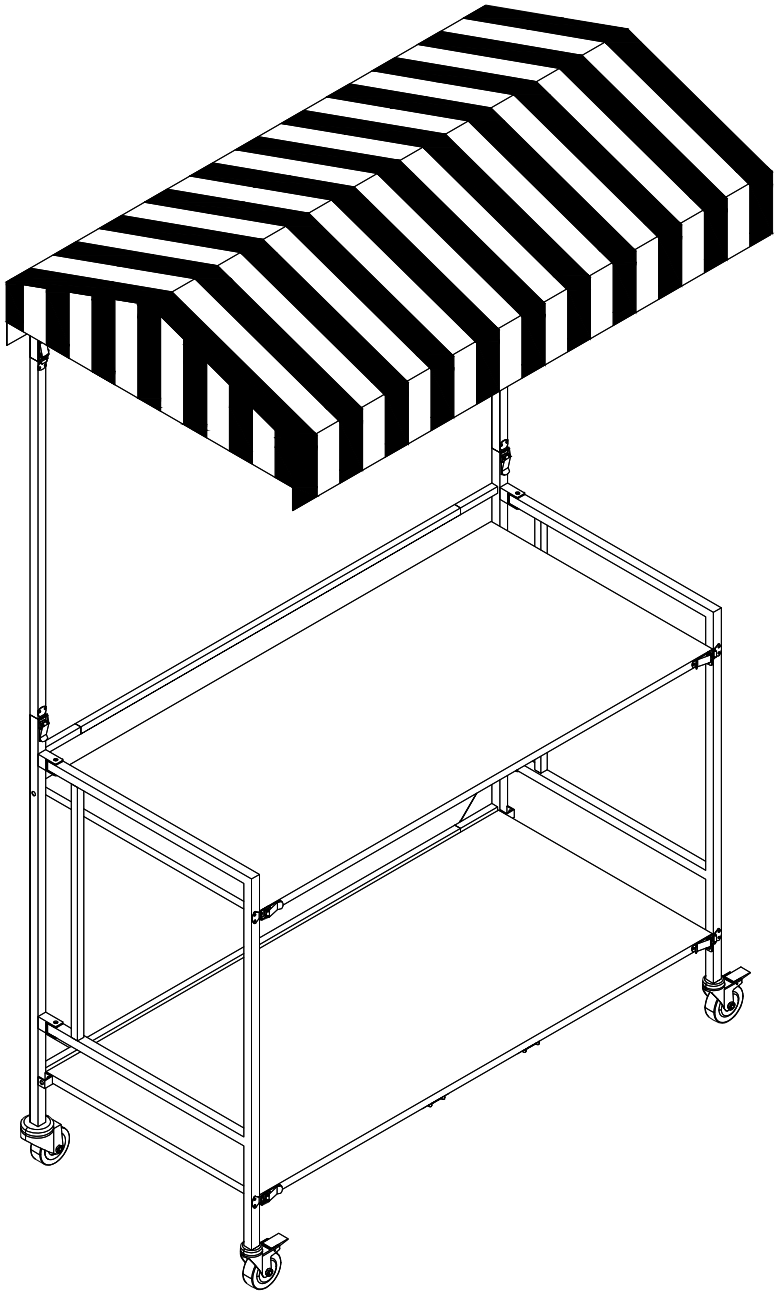

PACKAGE CONTENTS

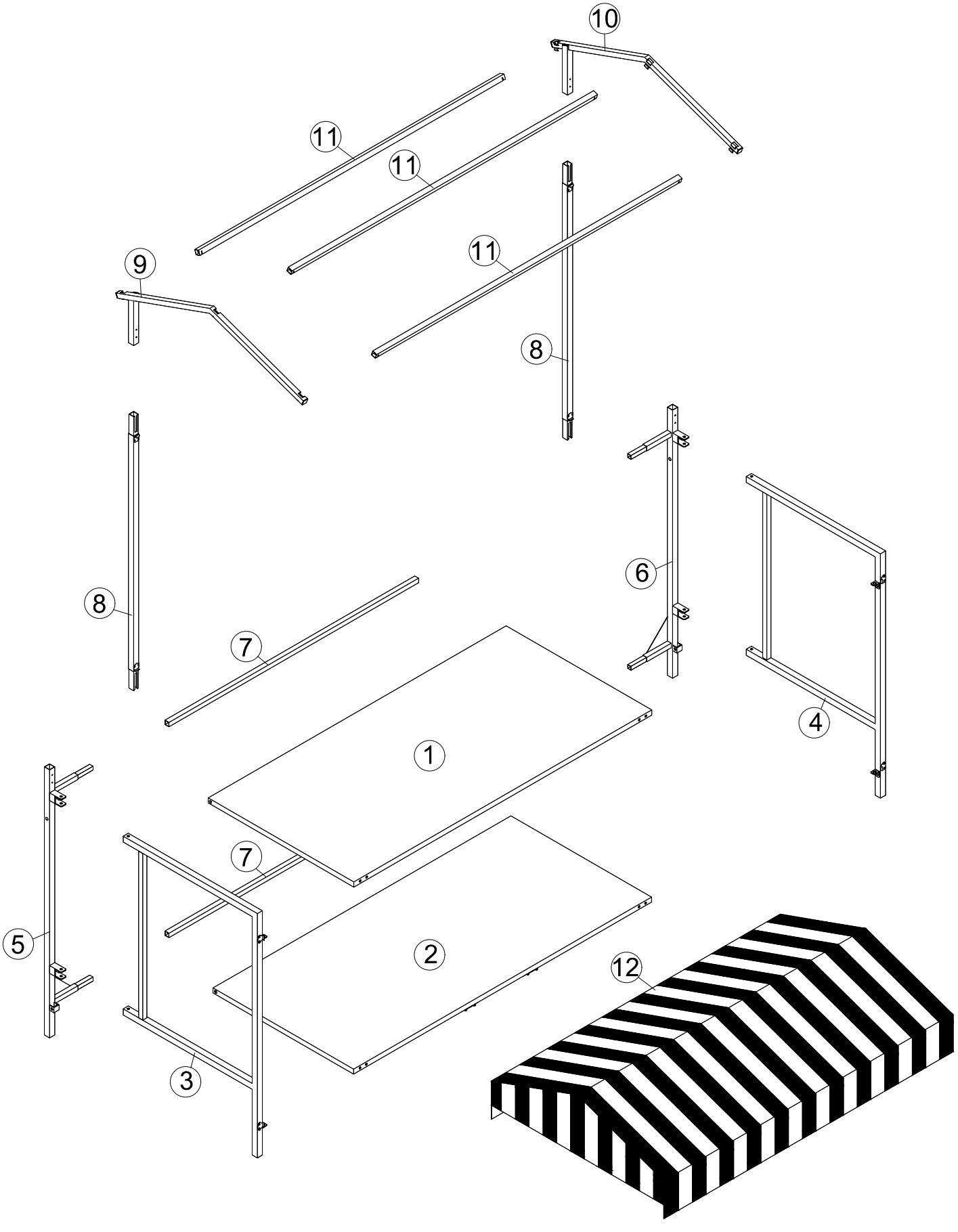

Part List

① 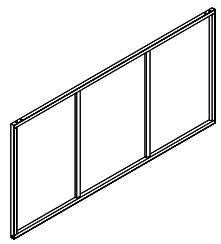 x 1	② 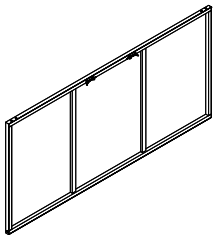 x 1	③ 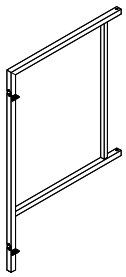 x 1	④ 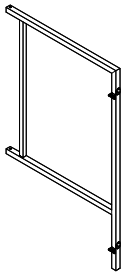 x 1
⑤ 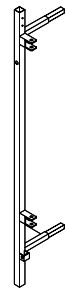 x 1	⑥ 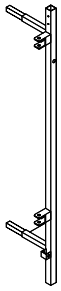 x 1	⑦ 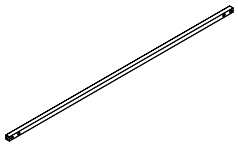 x 2	⑧  x 2
⑨ 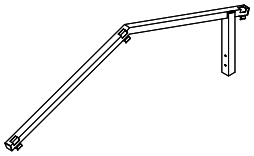 x 1	⑩ 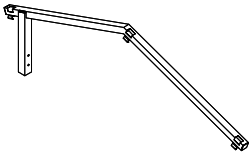 x 1	⑪ 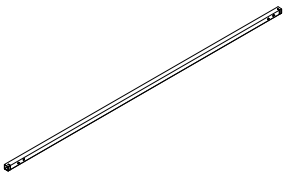 x 3	⑫ 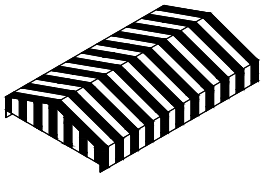 x 1

Hardware List

A		6x10mm	Hexagonal socket screw	8 PCS
B		6x35mm	Hexagonal socket screw	8 PCS
C		4x10mm	Flat head cross screw	28+2 PCS
D		M6x10	Hex nut	4 PCS
E			Buckle	14 PCS
F	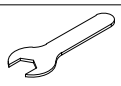	10mm	Open end wrench	1 PC
G			Allen wrench S4	1 PC
H			Caster	1 PC

Step 1

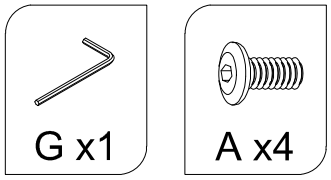

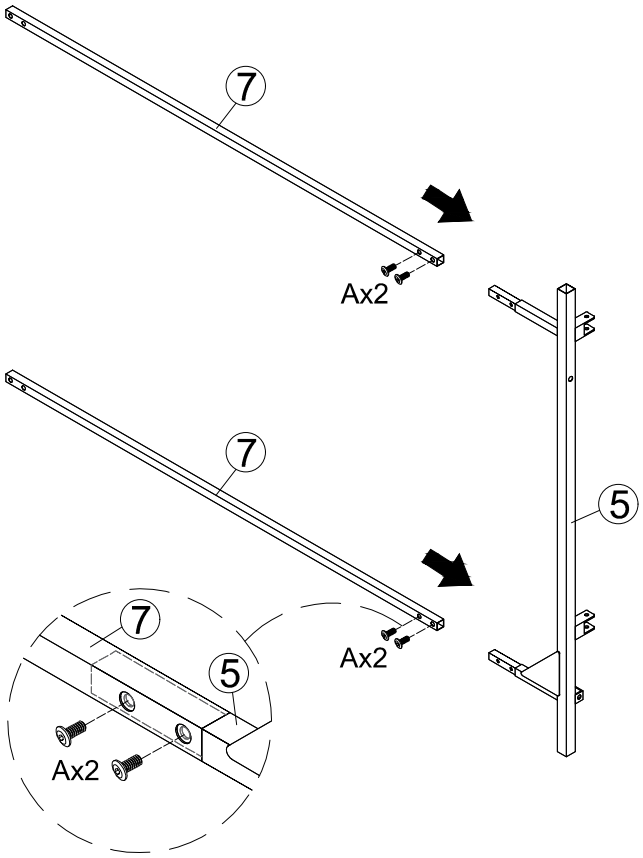

Step 2

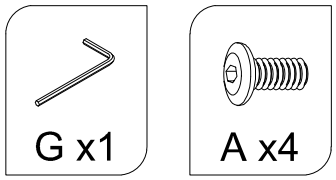

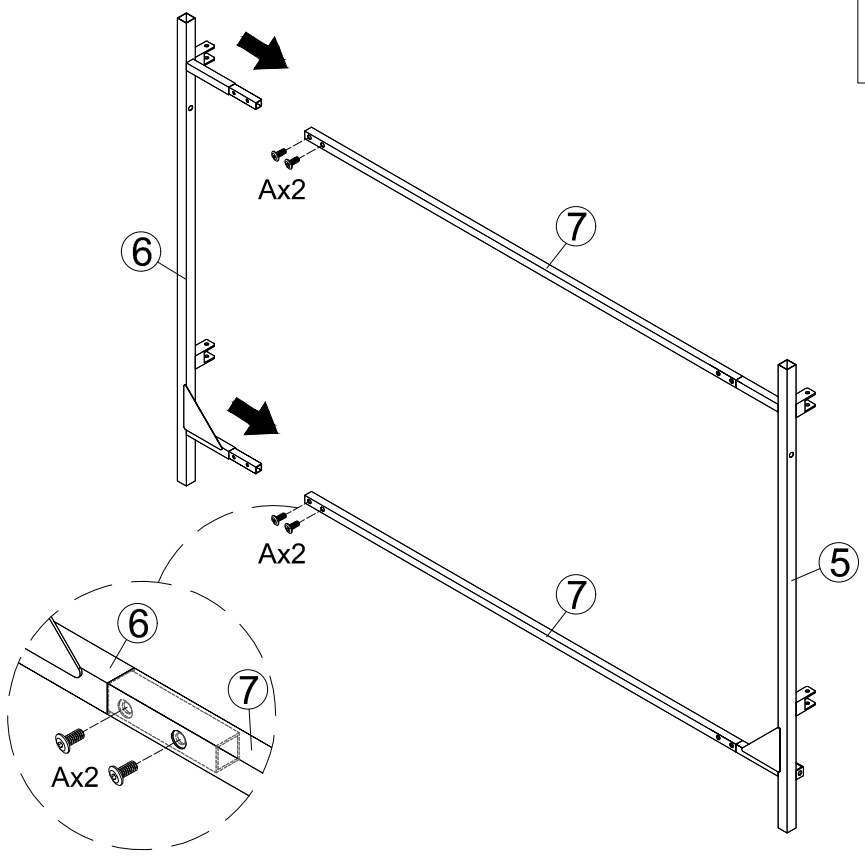

Step 3

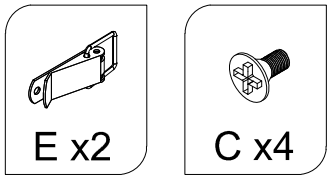

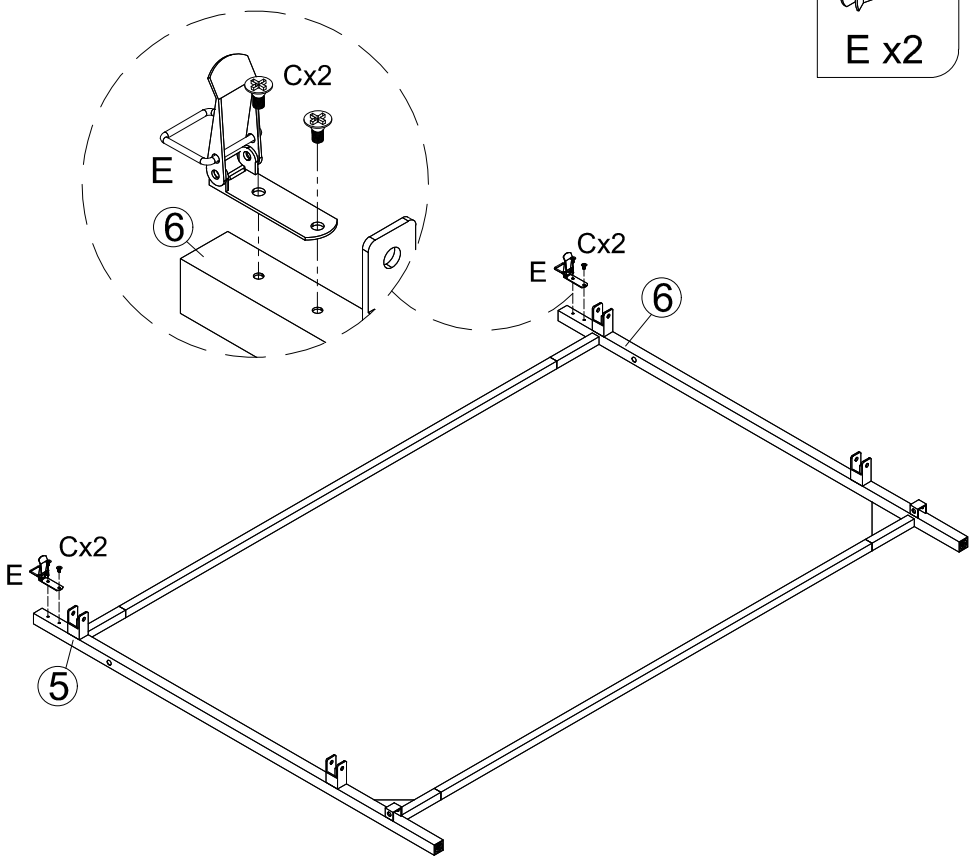

Step 4

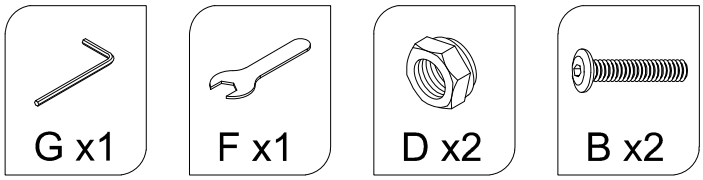

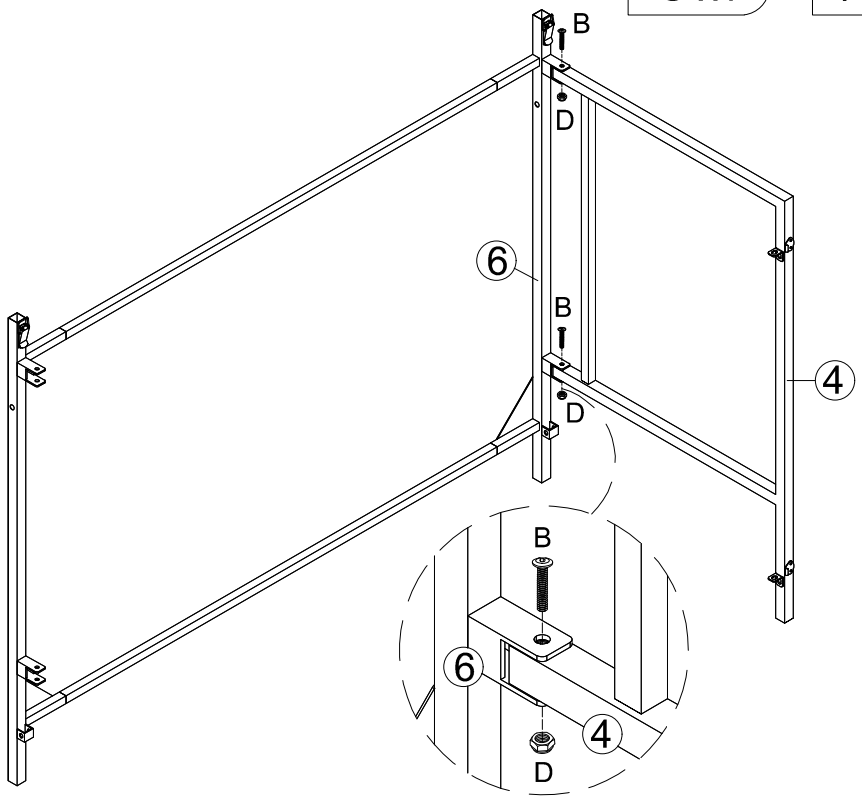

Tighten to 80%.

Step 5

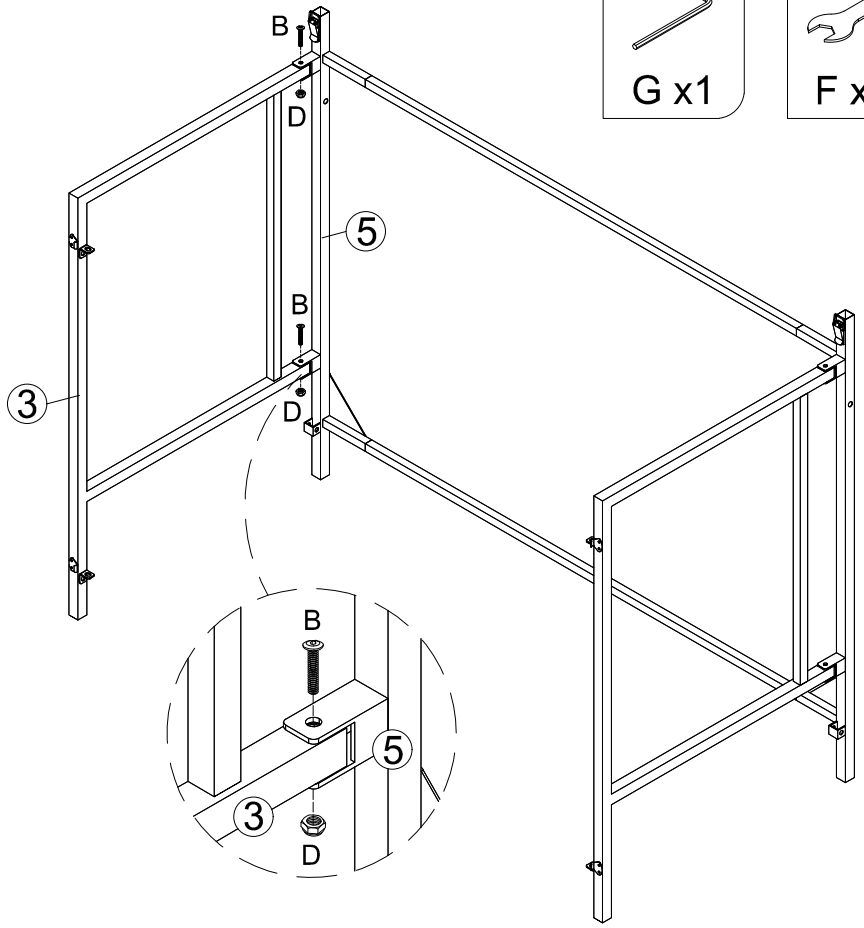

G x1

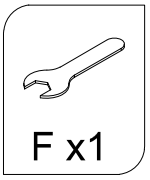
F x1

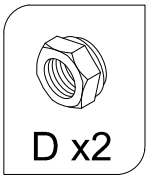
D x2

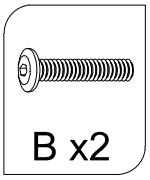
B x2

Tighten to 80%.

Step 6

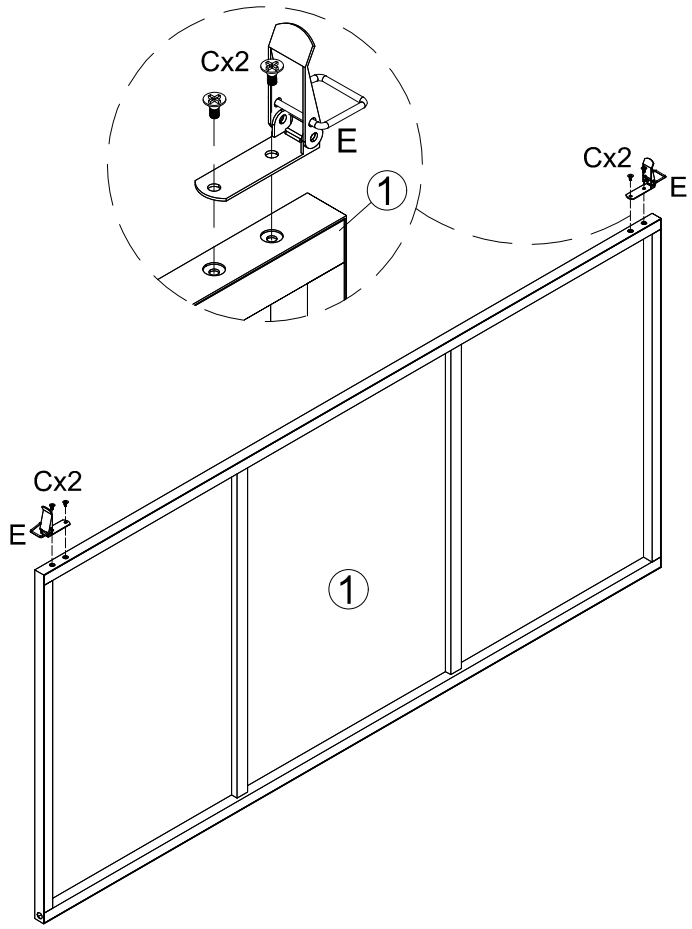

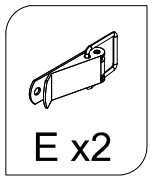
E x2

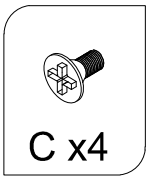
C x4

Step 7

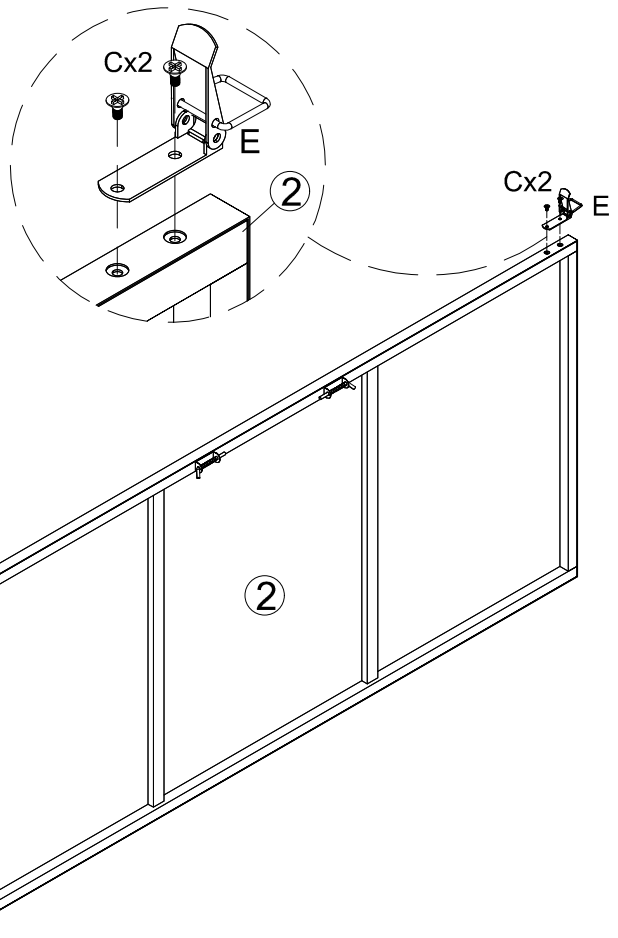

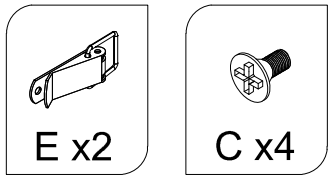

Step 8

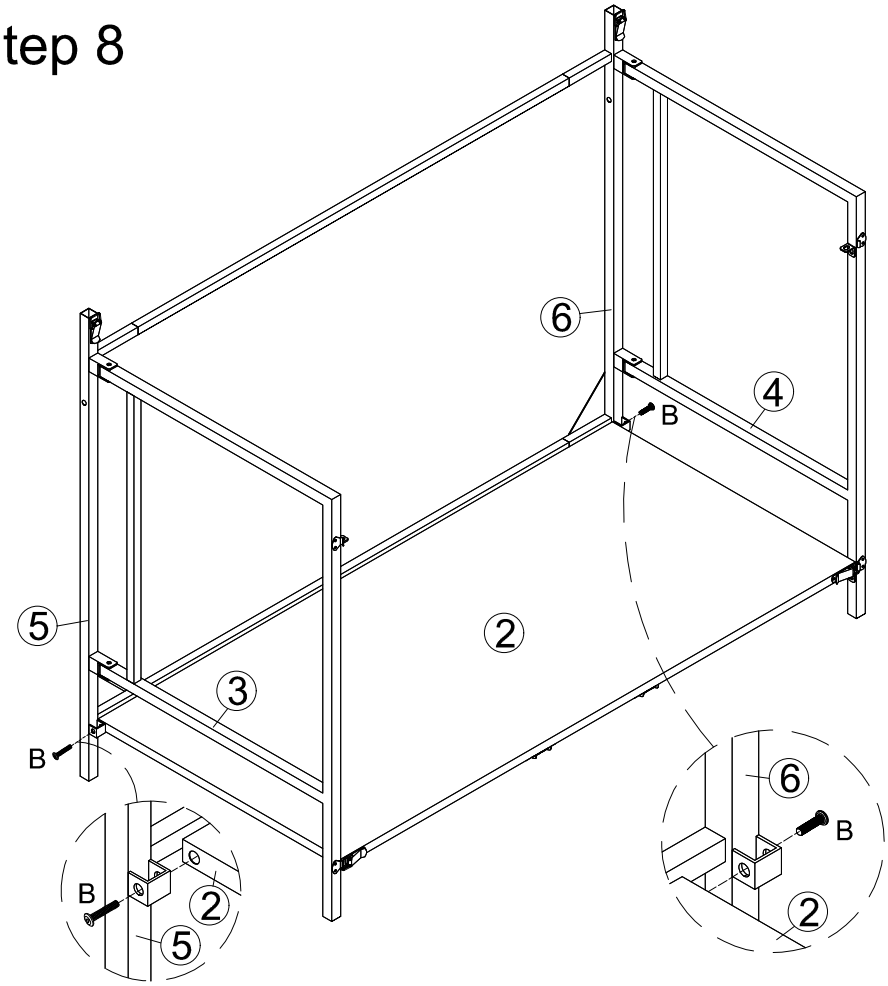

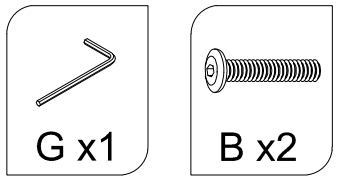

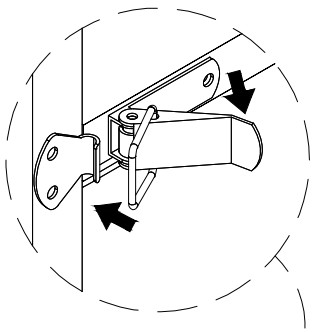

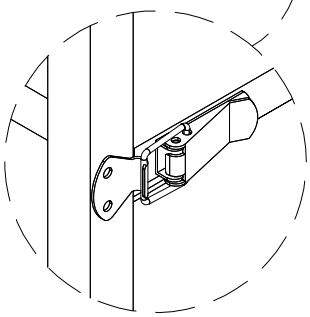

Step 9

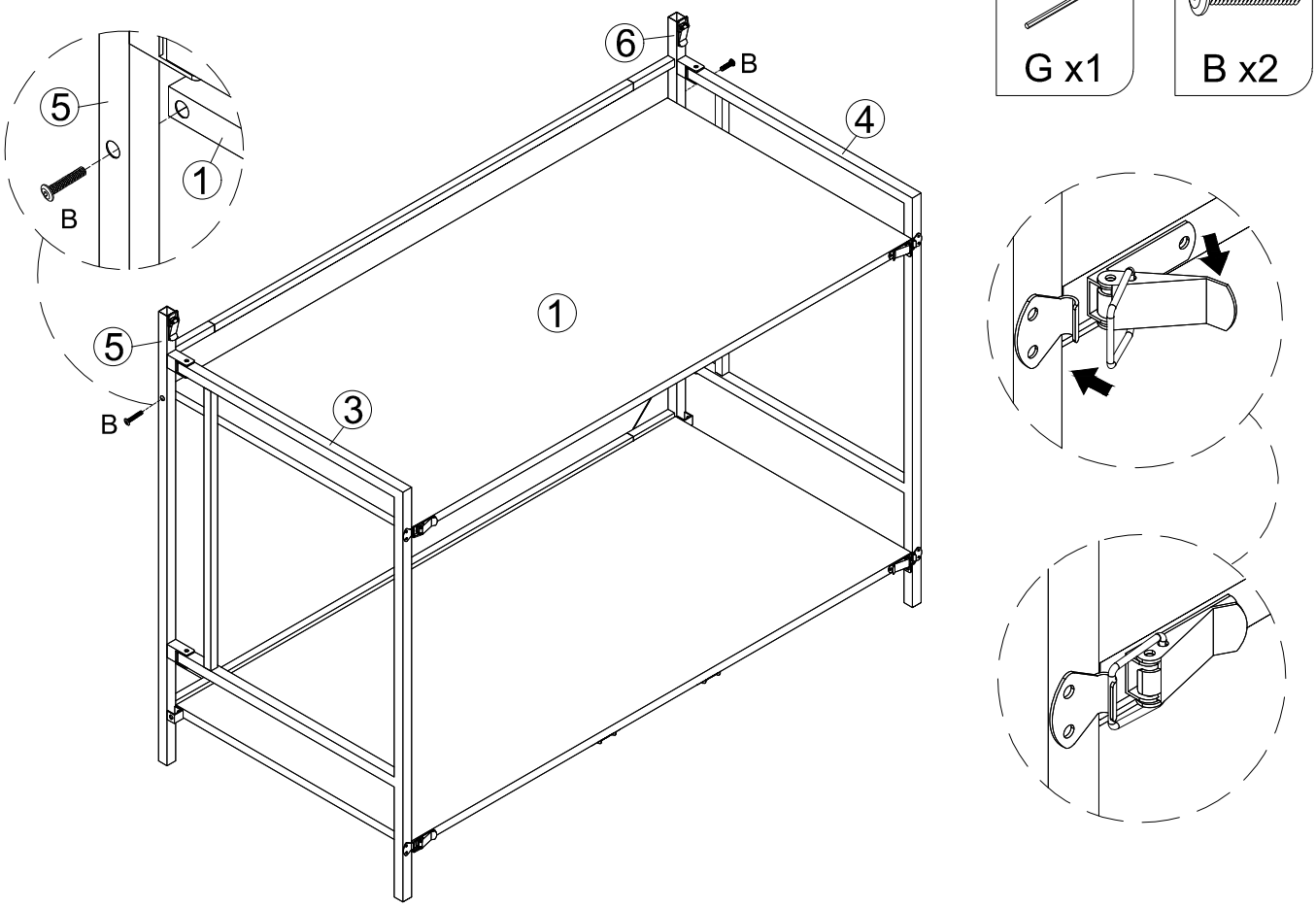

Step 10

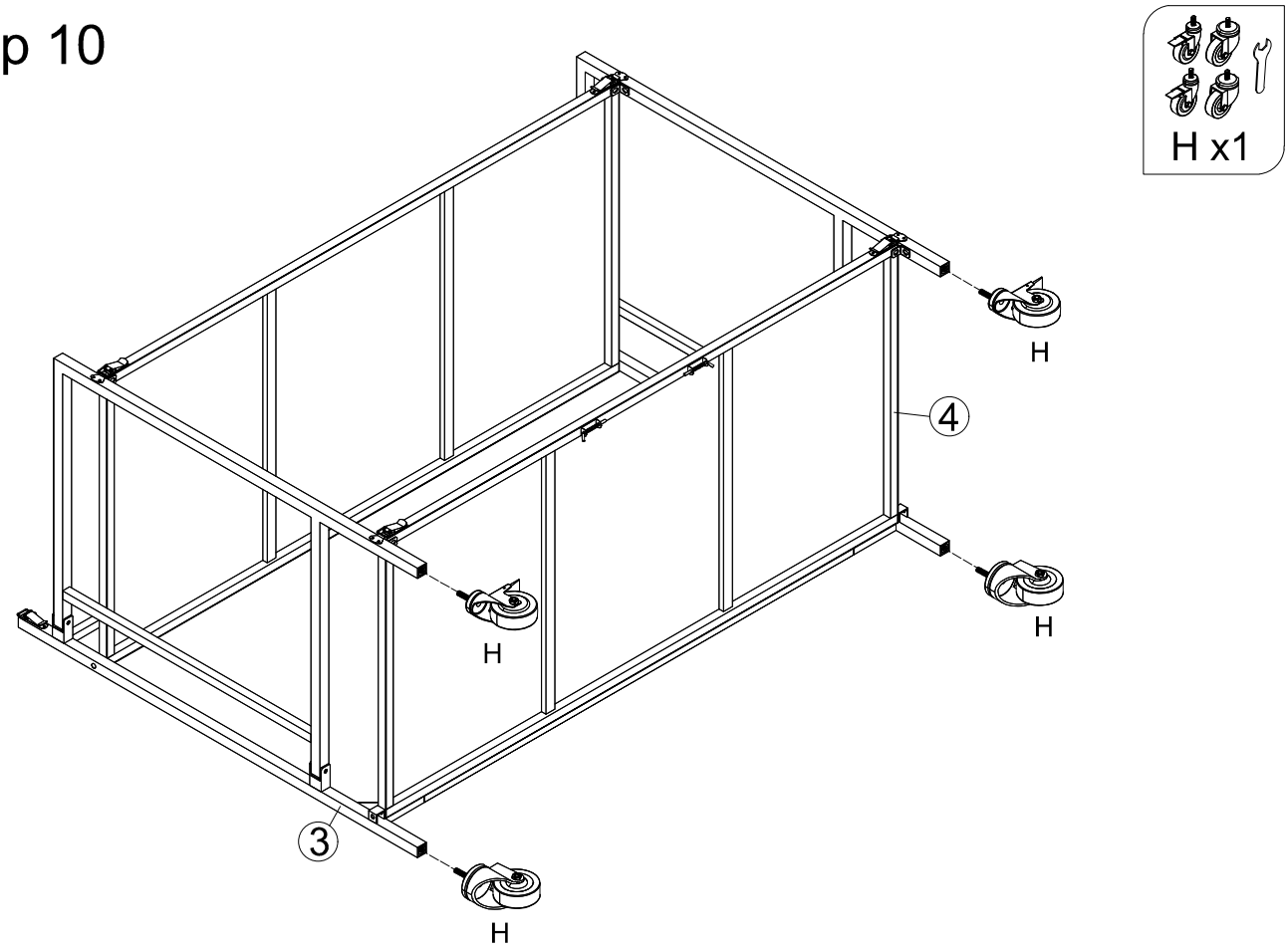

Step 11

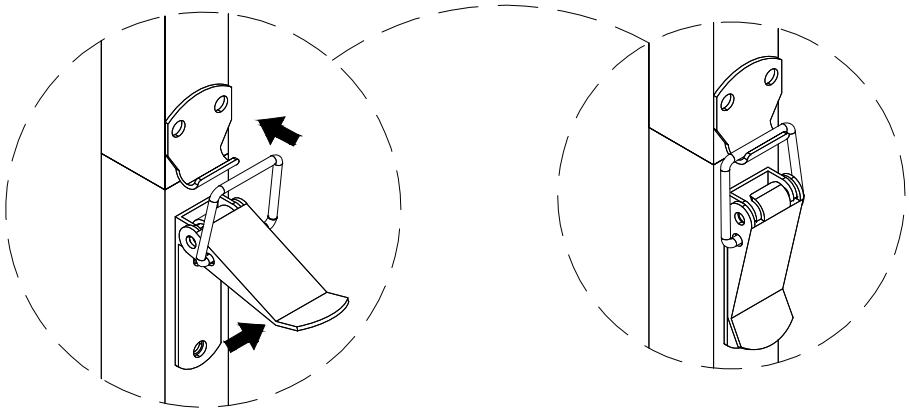

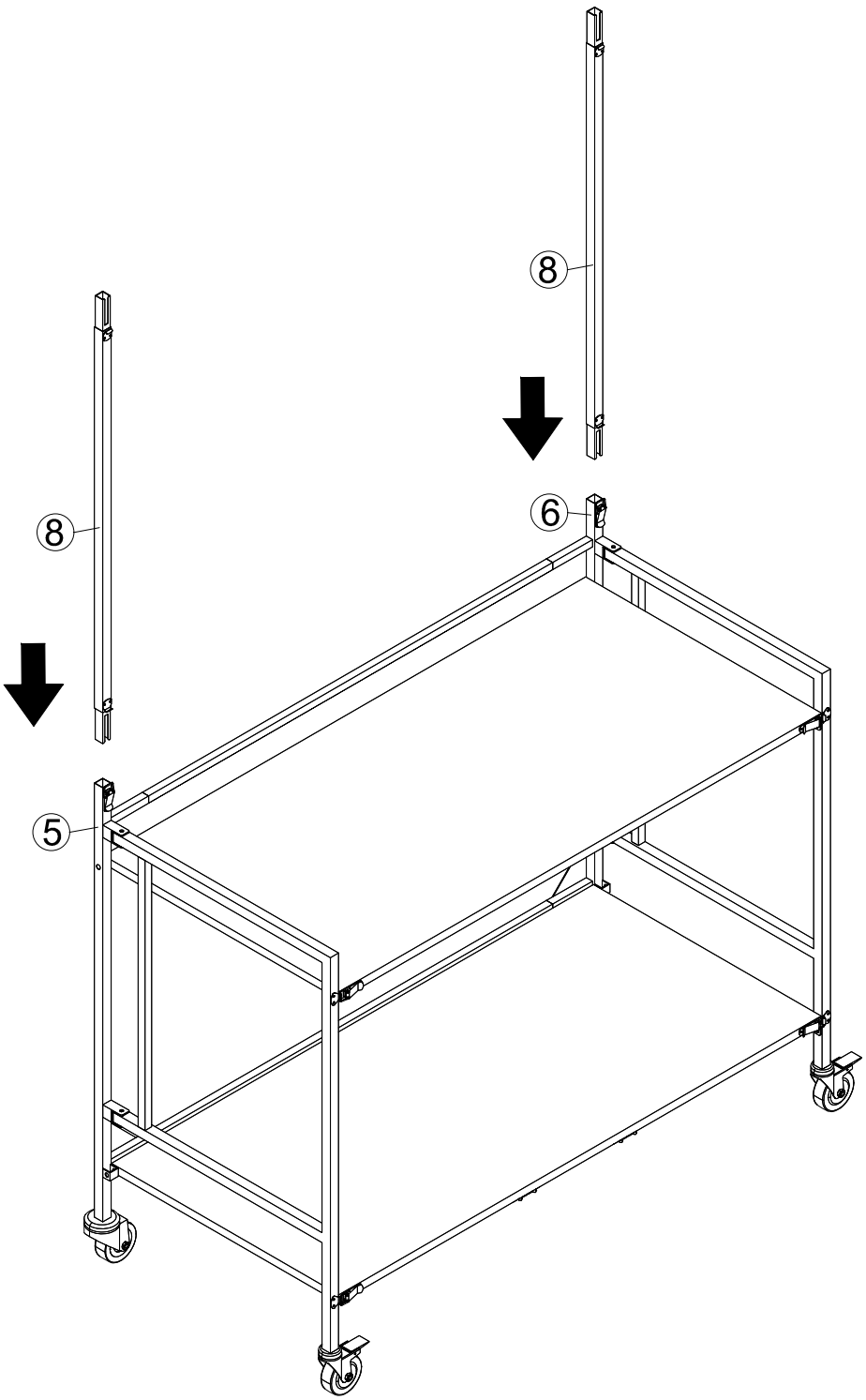

Step 12

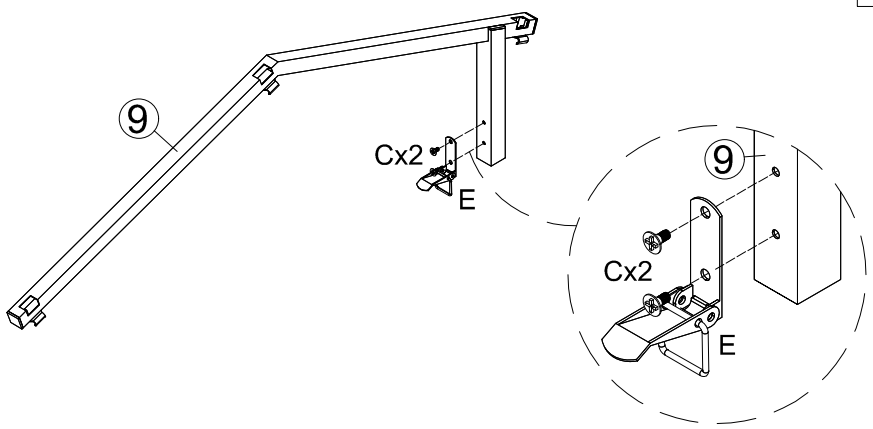

E x1

C x2

Step 13

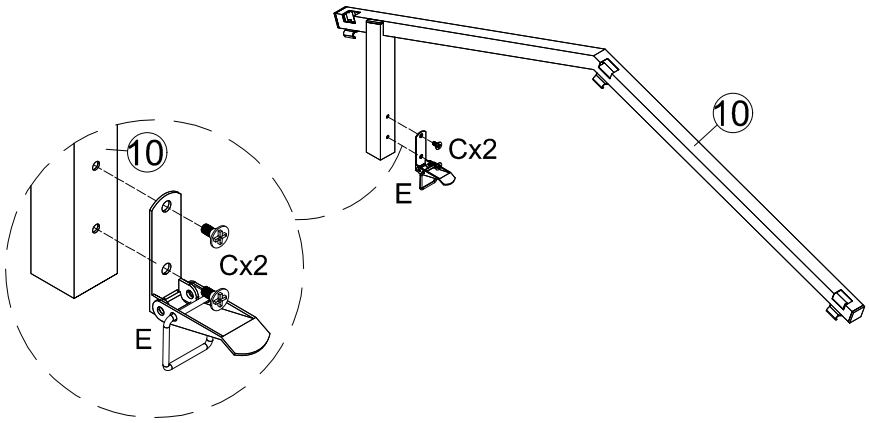

E x1

C x2

Step 14

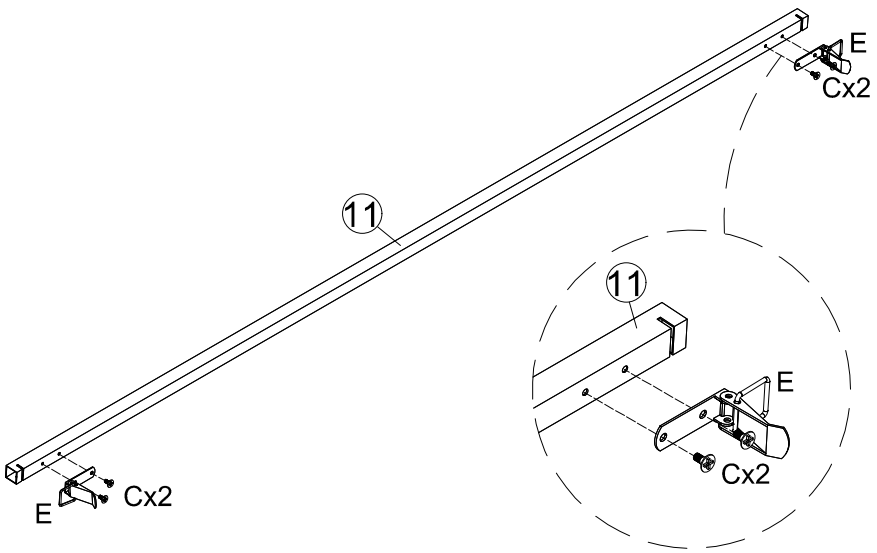

E x6

C x12

x 3

Step 15

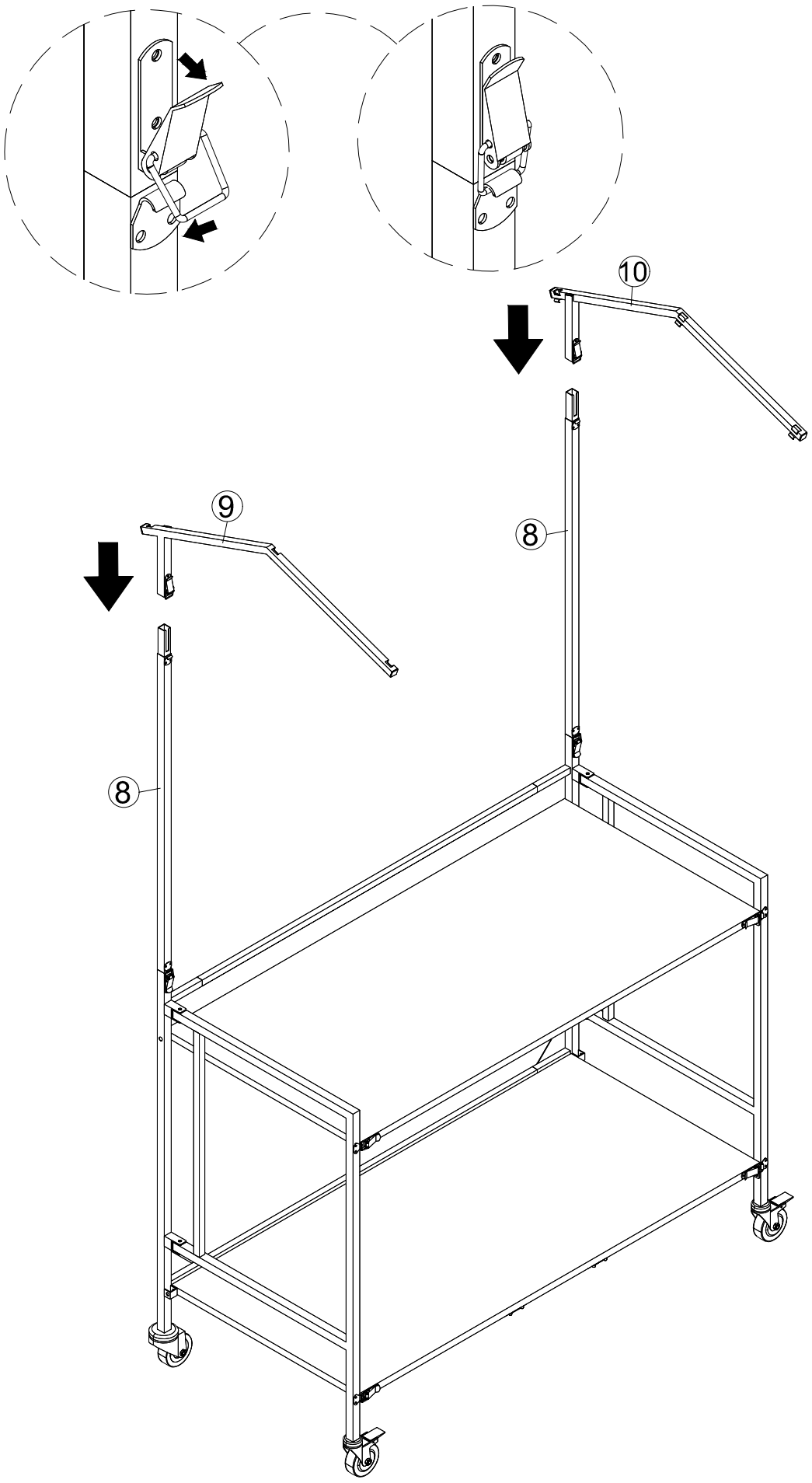

Step 16

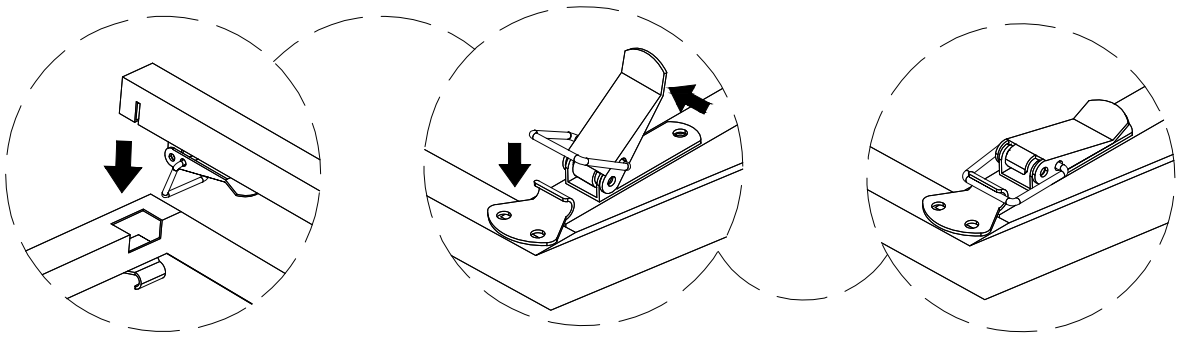

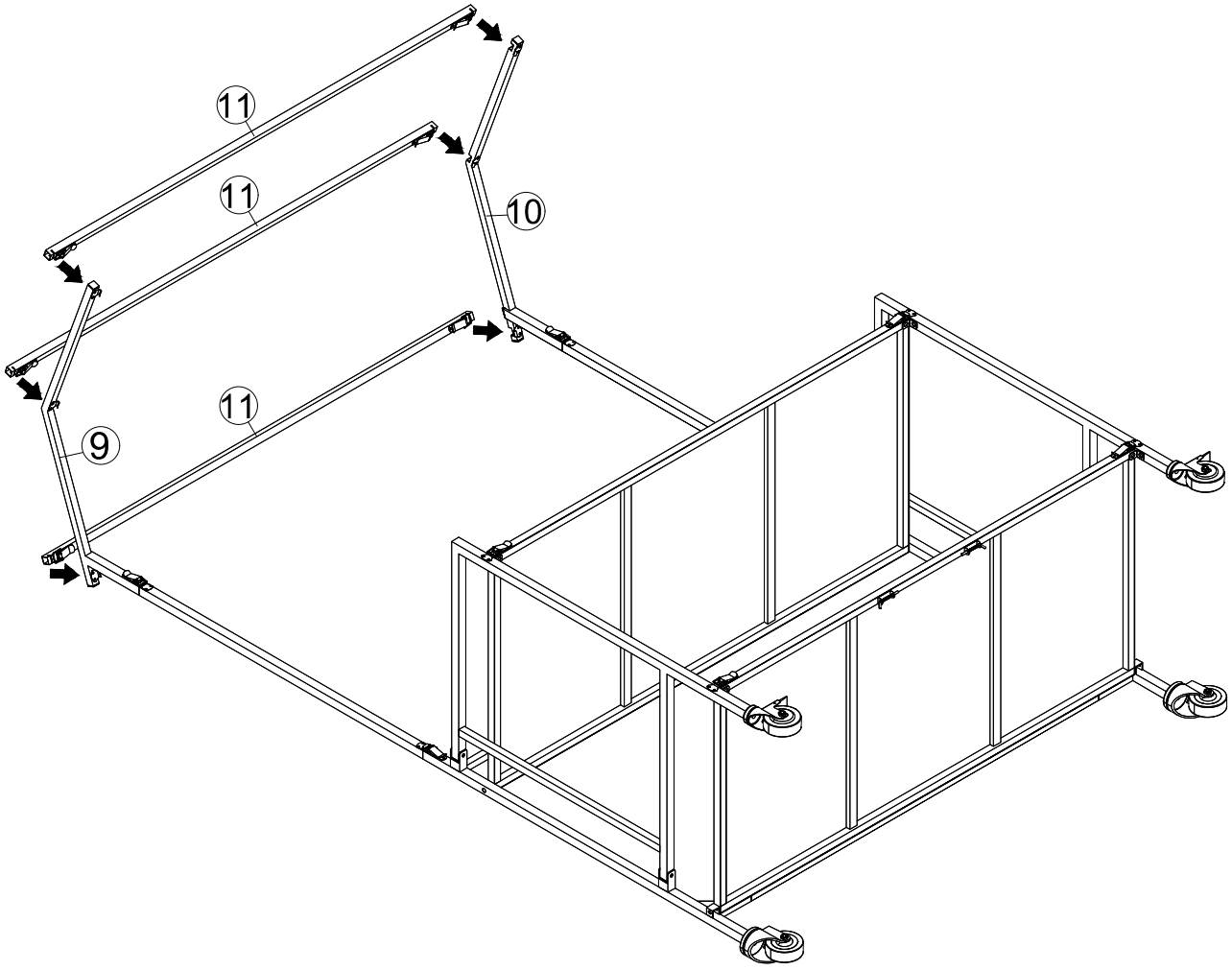

Step 17

1. Can be assembled while laid down.
2. Position part 12 over the top iron frame.
3. Secure by wrapping the internal hook-and-loop fastener around part 11.
4. Fasten the four corner ropes to the iron frame.
5. Adjust to the desired configuration.

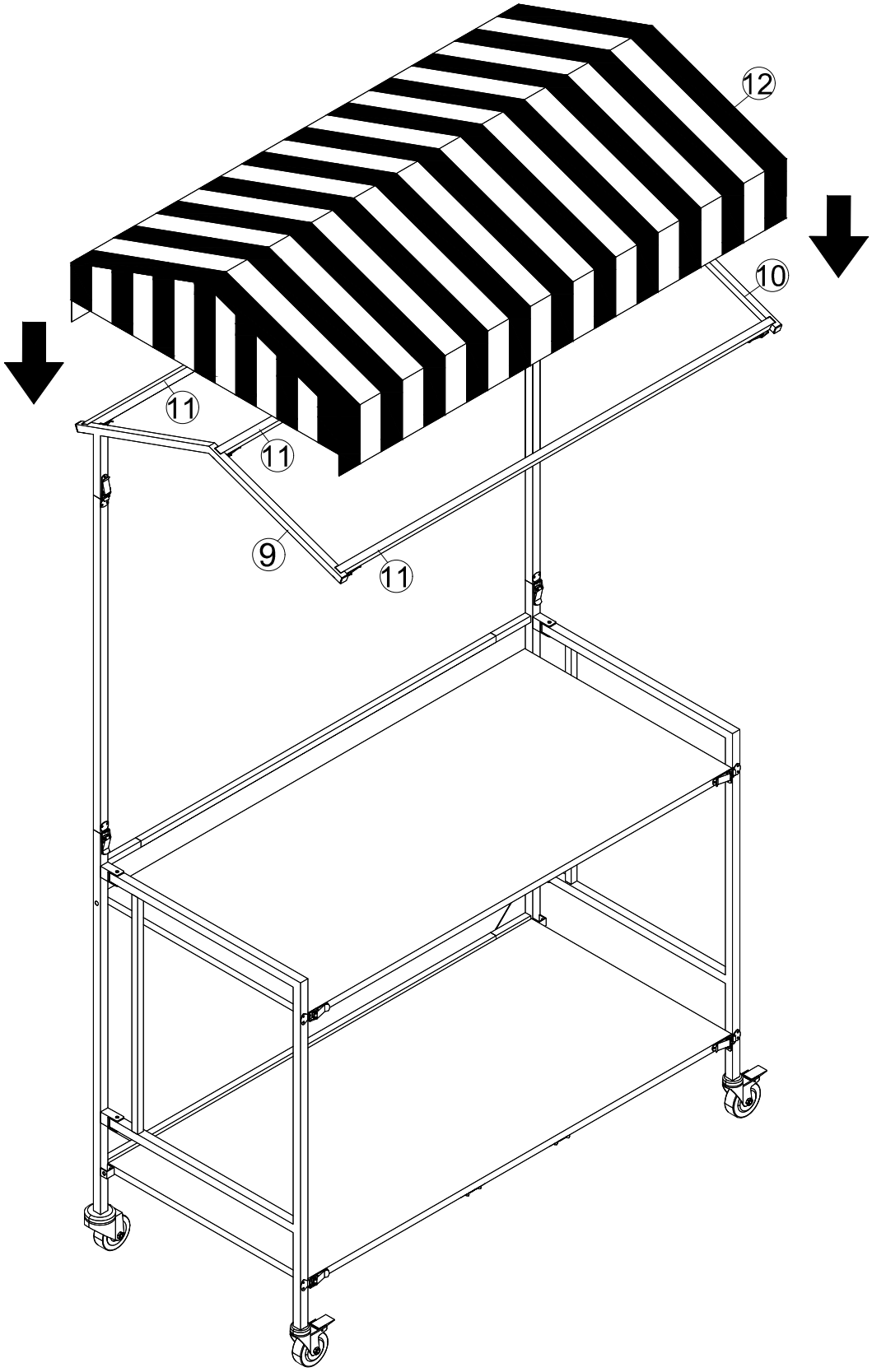

Step 18

