Little Helper Pet Play Stand Toys - Pink

TD-13636A

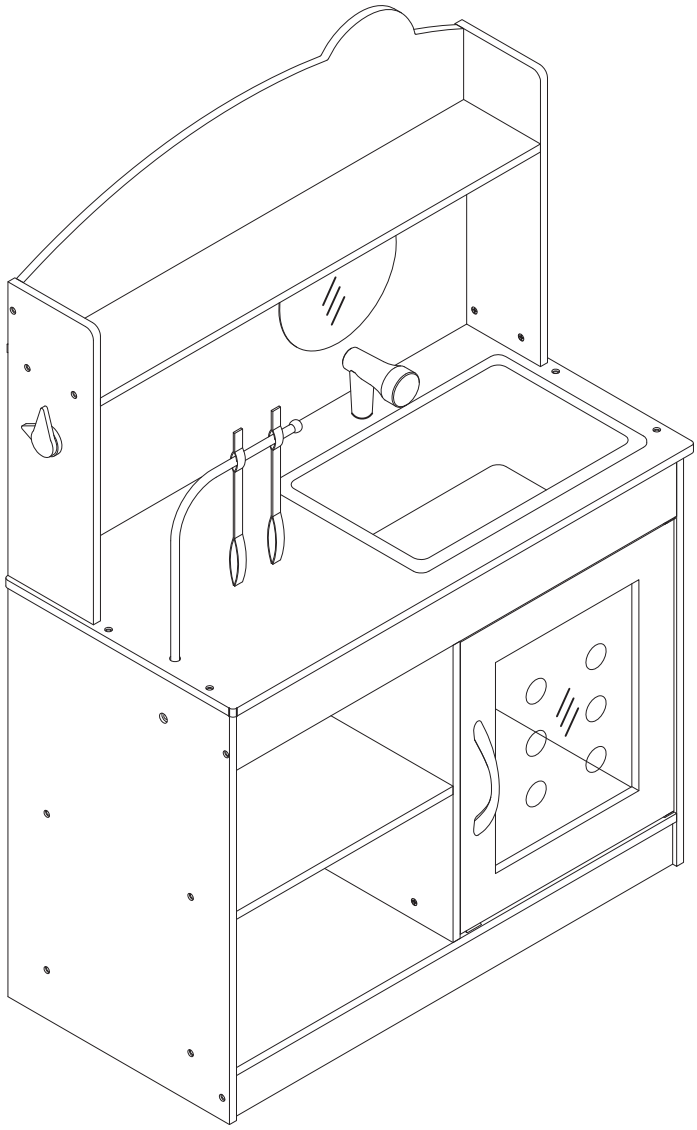

WARNING

CHOKING HAZARD-small parts
Not for children under 3yrs
The toy is to be assembled by an adult.

TIME SAVER!
3D Interactive Instruction

V-1

ENGLISH WARNING! Not suitable for children under 3 years, as there is a choking hazard from swallowable small parts. Assembly should be carried out by an adult. Prior to assembly this package contains sharp edges and sharp points. Keep away from children until assembled. Please remove all packaging attachments before giving this item to your child. Please keep this information for possible future correspondence.

ČESKY UPOZORNĚNÍ! Výrobek není vhodný pro děti do 3 let. Obsahuje drobné části, hrozí nebezpečí udušení. Montáž musí provádět dospělý. Design a barvy výrobků mohou být změněny bez předchozího upozornění. Před prvním použitím odstraňte všechny obaly z dosahu dětí. Tyto informace uschovejte pro případné budoucí použití.

CROATIA UPOZORENJE! Igračka nije prikladna za djecu mlađu od tri godine zbog malih dijelova gušenje opasnost. Skupština mora biti izvedena od strane odrasle osobe. Varijacije u boji i dizajnu, mi se pridržavamo. Uklonite sve ambalaže prije prve uporabe. Sačuvajte ove informacije za bilo koji naknadno dopisivanje.

DUTCH WAARSCHUWING! Niet geschikt voor kinderen beneden 3 jaar omdat er gevaar voor verstikking door inslikbare kleine voorwerpen bestaat. De montage van dit speelgoed moet door een volwassenen worden uitgevoerd. Kleuren en versieringen kunnen afwijken. Verwijder alle verpakkingselementen voordat u dit speelgoed aan uw kind geeft. Bewaar deze verpakking voor een eventuele latere correspondentie.

FRENCH ATTENTION! Ce produit est inadapté aux enfants de moins de 3 ans, car il existe le risque d'étouffement causé par les petites pièces qui peuvent s'avaler. Le montage doit être effectué par un adulte. Nous nous réservons le droit d'apporter des modifications aux couleurs et à la conception. Retirer l´emballage et les attaches plastiques avant de donner cet article à votre enfant. Nous vous prions de conserver cette information pour une éventuelle utilisation ultérieure.

GERMAN ACHTUNG! Nicht geeignet für Kinder unter 3 Jahren, da Erstickungsgefahr durch verschluckbare Kleinteile besteht. Der Zusammenbau muss von einem Erwachsenen durchgeführt werden. Abweichungen in Farbe und Gestaltung behalten wir uns vor. Bitte entfernen Sie alle Verpackungsteile vor dem erstmaligen Gebrauch. Bitte bewahren Sie diese Information für evtl. spätere Korrespondenz auf.

HUNGARY FIGYELMEZTETÉS! Nem alkalmas 3 év alatti gyermekek, mert a kis alkatrészek fulladást okozhatnak. A szerkezetet úgy kell elvégezni egy felnőtt. Szín és design fenntartva. Kérjük, távolítsa el a csomagolást az első használat előtt. Kérjük, őrizze meg ezt az információt bármilyen későbbi vonatkozó levelezést.

ITALIAN AVVERTENZA! Non adatto a bambini al di sotto dei 3 anni, visto che vi è rischio di asfissiamento causato dall'ingerimento di componenti piccoli. Il montaggio di questo prodotto deve essere fatto sotto di un adulto. I colori e le decorazioni possono variare. Per favore conservare la confezione nel caso ci sia bisogno di spedire indietro qualcosa.

POLSKI OSTRZEŻENIE! Produkt nie nadaje się dla dzieci poniżej 3–go roku życia. Ze względu na małe części istnieje ryzyko zadławienia, połknięcia, itd. Montaż wózka powinien odbywać się pod nadzorem osoby dorosłej. Przed pierwszym użyciem proszę usunąć wszystkie elementy opakowania. Kolory i wzory mogą się różnić. Należy zachować opakowanie w przypadku konieczności wymiany.

PORTUGAL AVISOS! Guarde esta informacão para futura referência. Não apropriado para criancas com menos de 3 anos de idade devido à existência de pecas pequenas e bordas/pontas afiadas. Este brinquedo deve ser montado por um adulto. As cores e o conteúdo podem ser algo diferentes do mostrado na caixa. Retire todo elemento de embalagem antes de entregar o produco à crianca.

SLOVENIJA OPOZORILO! Ni primerno za otroke mlajše od treh let. Nevarnost zadušitve. Majhni deli. Sestav mora opraviti odrasla oseba. Razlike v barvo in obliko, si pridržujemo pravico do. Prosimo, odstranite vse pakirni material pred prvo uporabo. Prosimo, da shranite te informacije za vsak nadaljnji korespondenci.

SLOVENSKY UPOZORNENIE! Výrobok nie je vhodný pre deti do 3 rokov. Obsahuje drobné časti, hrozí nebezpečenstvo udusenia. Montáž musí vykonávať dospelý. Design a farby výrobkov môžu byť zmenené bez predchádzajúceho upozornenia. Pred prvým použitím odstráňte všetky obaly z dosahu detí. Tieto informácie uschovajte pre prípadné budúce použitie.

SPAIN ADVERTENCIA! Guarde esta información para futura referencia. No apto para niños menores de 3 años por contener piezas pequeñas, contiene bordes/puntas afiladas. Este juguete debe ser montado por un adulto. Los colores y el contenido pueden ser algo diferentes de lo mostrado en la caja. Retire todos los elementos de embalaje antes de dar el articulo a su hijo.

SVENSKA VARNING! Inte lämplig för barn under 3 år på grund av små delar kvävningsrisk. Monteringen måste utföras av en vuxen. Färg och design är reserverade. Ta bort allt förpackningsmaterial före första användningen. Vänligen behålla denna information för eventuell senare korrespondens på.

繁體 警告！需由成年人完成组装。本產品不適於3歲以下兒童使用。本包装包含细小零件，完成组装前，請慎防兒童吞食小零件，避免窒息危險，且可能有鋒利邊緣及尖角，所以組裝完成前應置於兒童不能觸及之處，並遠離火源。

简体 警告！需要成年人帮忙组装。不适合三岁以下的儿童使用。完成组装前，本包装包含细小零件，可能引发窒息；以及包含锋利边缘和尖角，所以完成组装前，请确保其远离儿童。

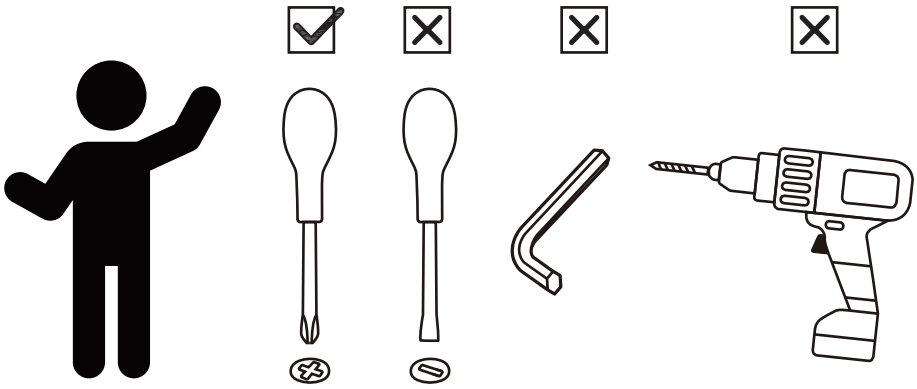

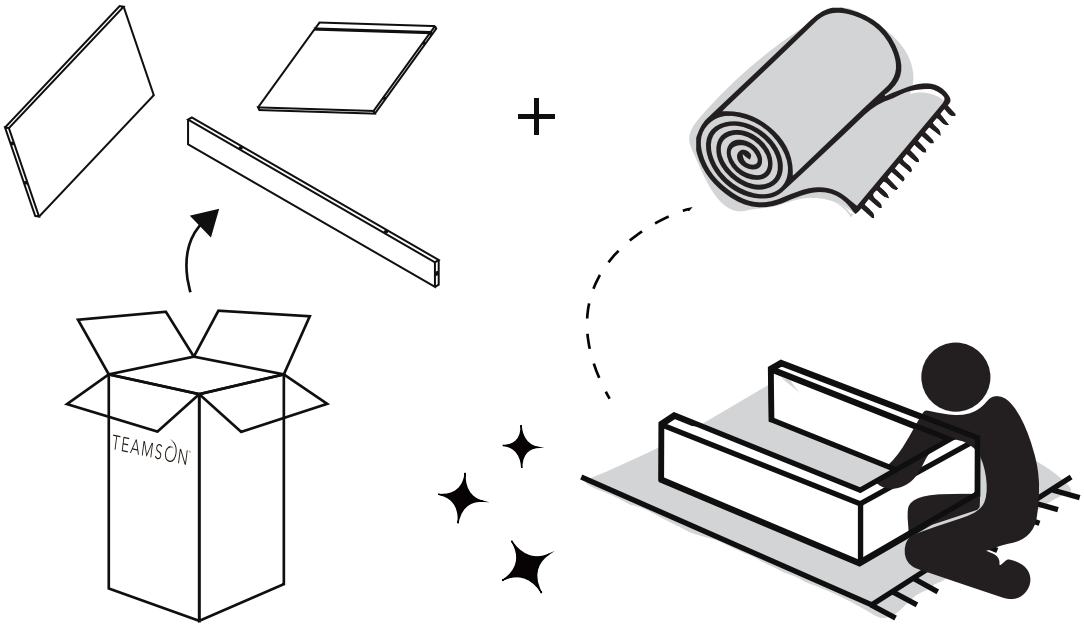

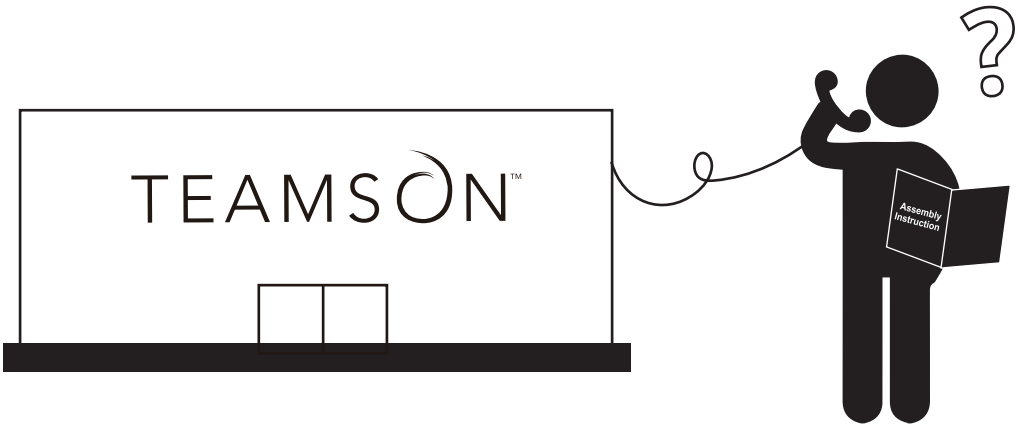

** Got questions? Please have your product code (on the first page of this instruction, e.g. TD-12345A) and the order number ready, give us a call or email us through our customer care support! We are always ready to assist you!

3D Interactive Instruction

www.teamsonkids.com

We feeling the joy of serving you best!

USA .... **+1(800)935-3959**

Mon - Fri 10:00am ~ 2:00pm EST

✉ support@teamson.com

EU/UK ... **+44(0)1952-916-050**

Mon - Thu 9:00am ~ 5:00pm GMT

Friday 9:00am ~ 4:00pm GMT

✉ support@teamson.co.uk

ASIA ... 深圳办公室:

+86(0755)8885-3558.分机号108

Mon - Sat 9:00am ~ 5:00pm GMT+8

✉ sales_ec@teamson.com

台北辦公室:

+886(2)2556-6268

Mon - Fri 9:00am ~ 5:00pm GMT+8

✉ sales_ec@teamson.com

Thank you for choosing Teamson Kids

Exploded Drawing

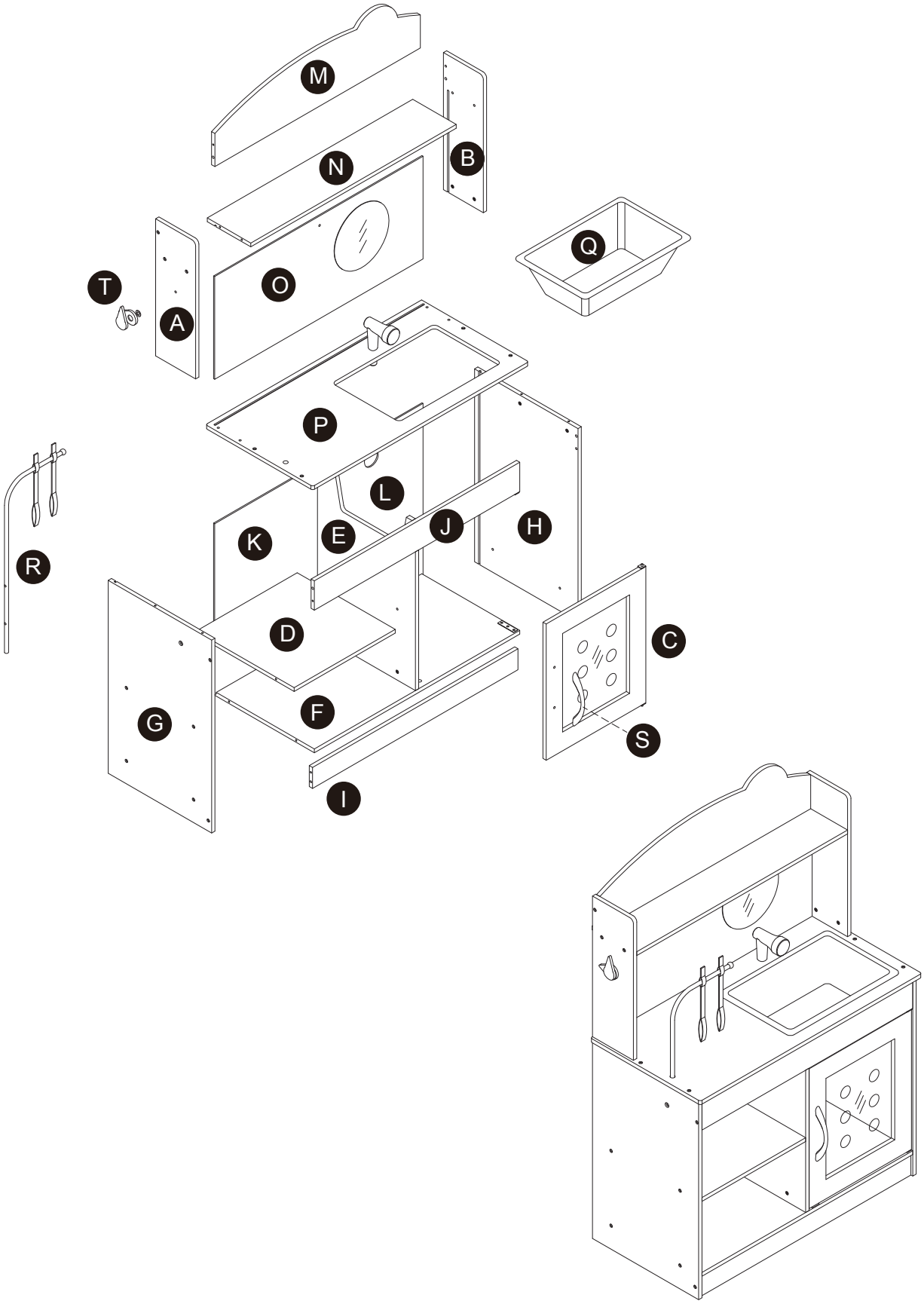

Questions?
Scan Here

Product Parts

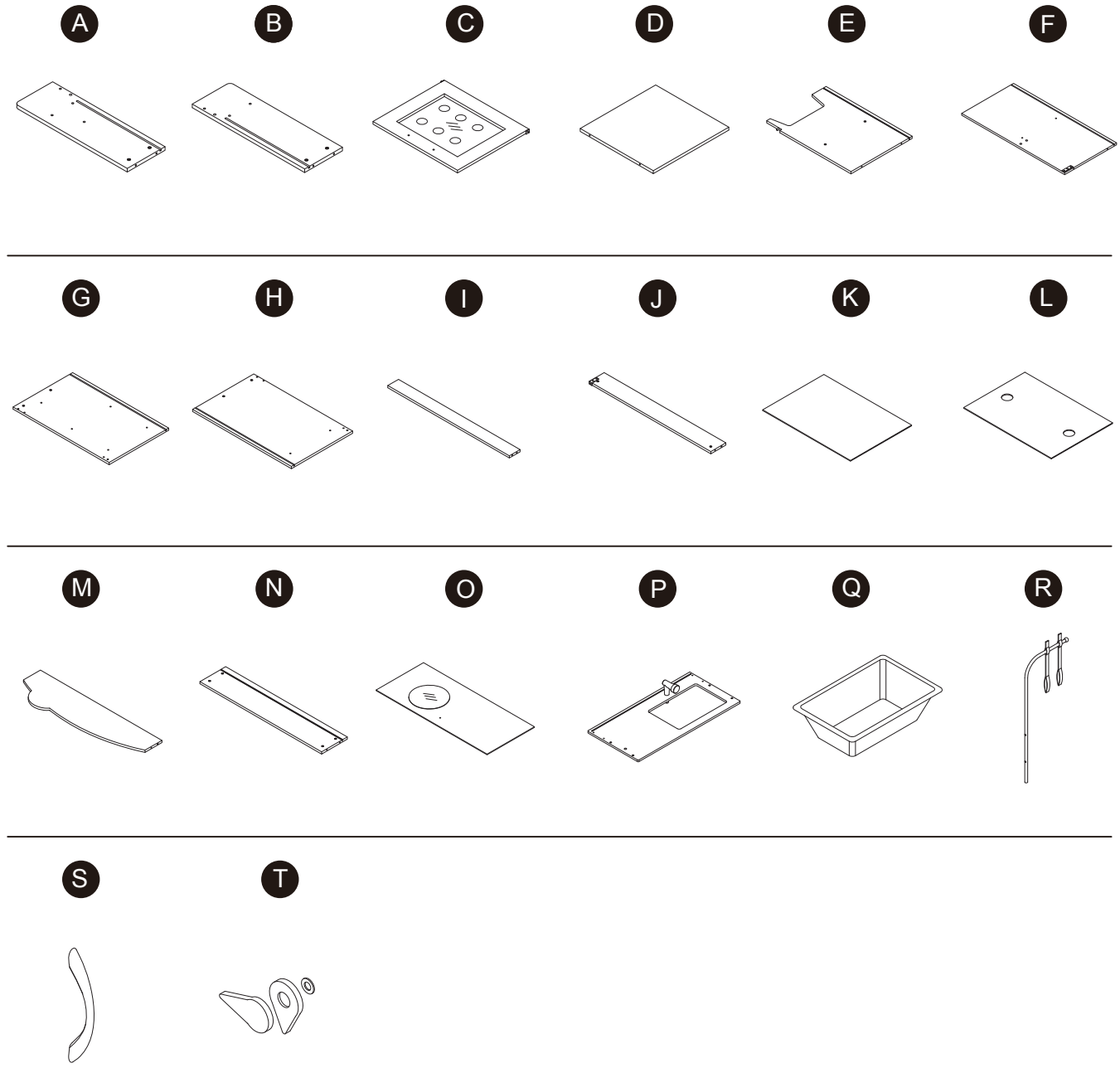

Questions?
Scan Here

Accessories

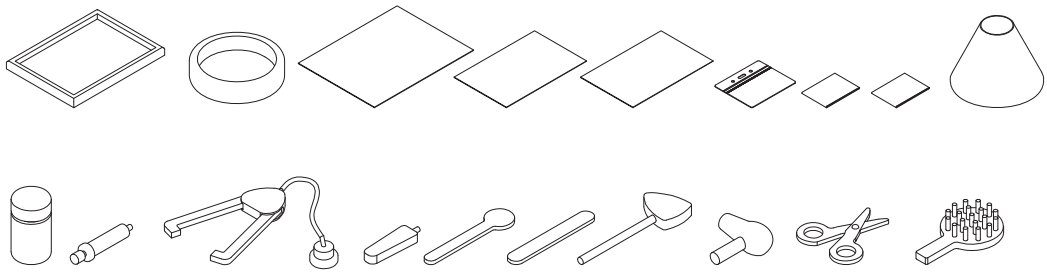

Hardware

1	2	3	4	5
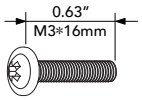	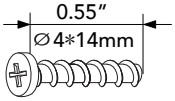	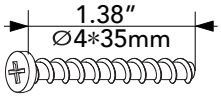	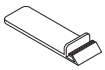	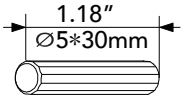
1 pc	2 pcs	28 pcs	1 pc	6 pcs

6
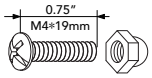
1 set

Questions?
Scan Here

Step 1

1 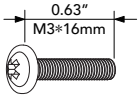

1 pc

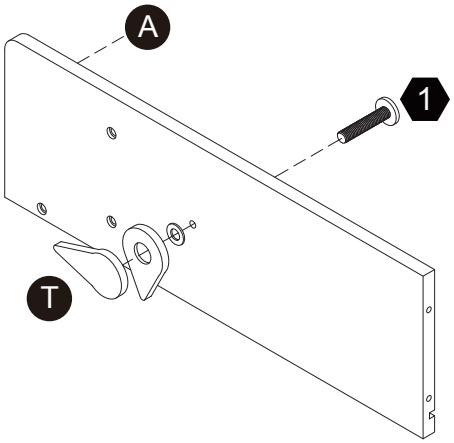

Step 2

2 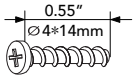

2 pcs

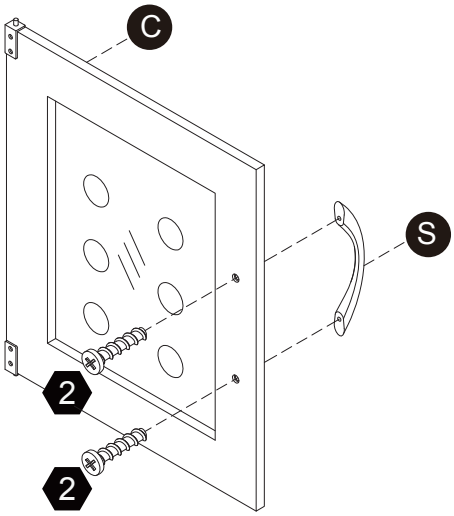

Step 3

3 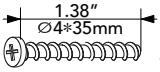

2 pcs

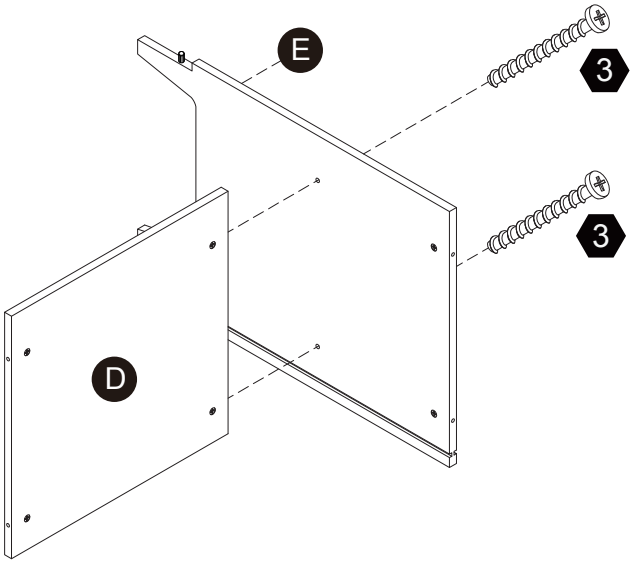

Questions?
Scan Here

Step 4

3 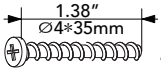

2 pcs

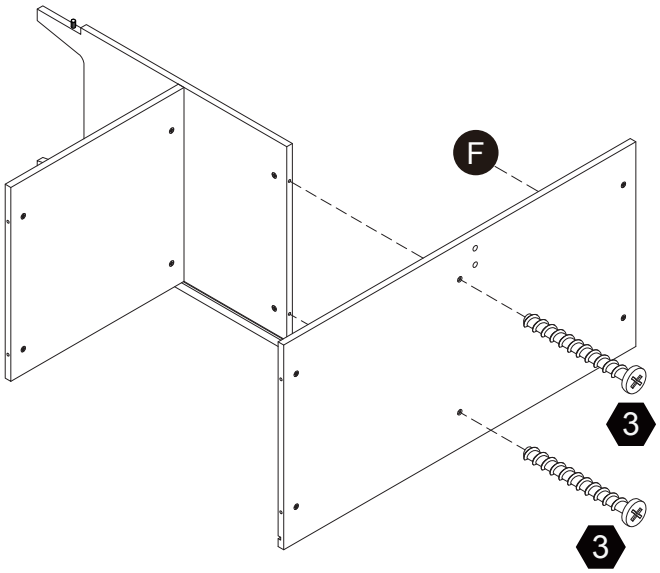

Step 5

3 1.38″ ∅4*35mm 5 pcs 5 1.18″ ∅5*30mm 1 pc

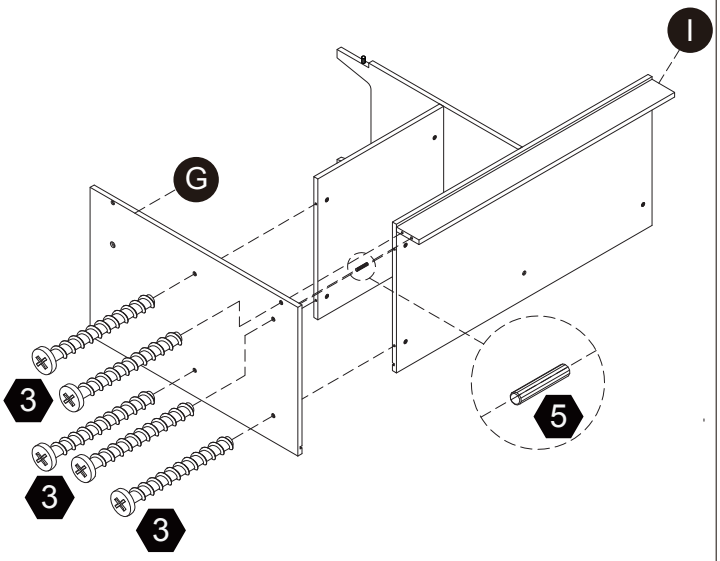

Step 6

3 1.38″ ∅4*35mm 3 pcs 5 1.18″ ∅5*30mm 1 pc

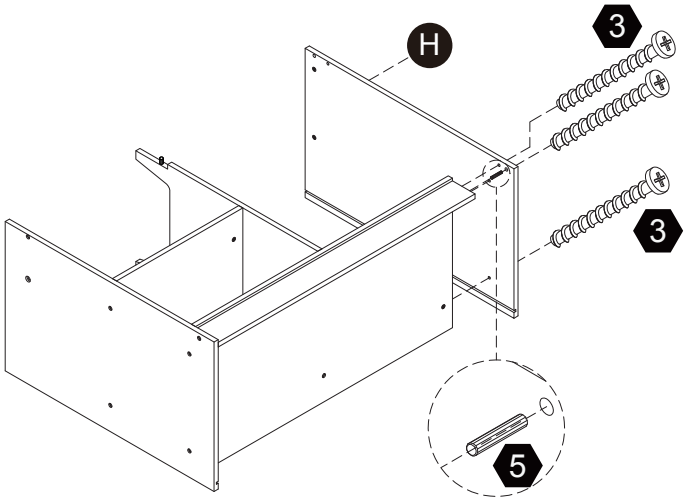

Step 7

4 1 pc

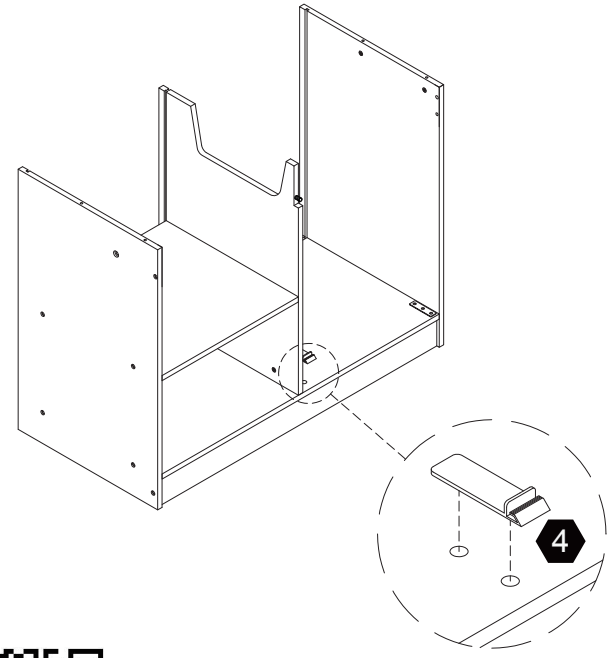

Questions?
Scan Here

Step 8

5 1.18″ ∅5*30mm 2 pcs

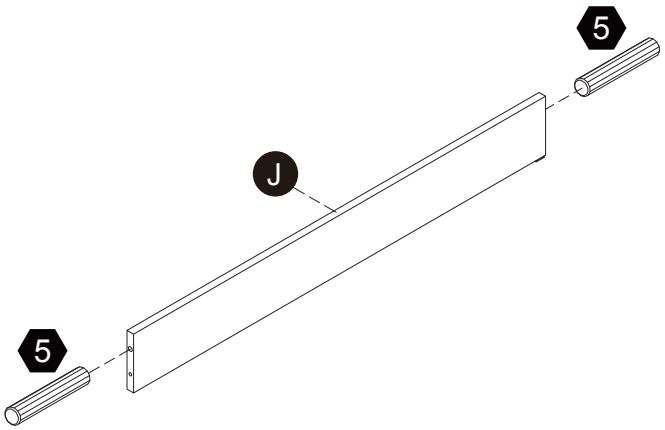

Step 9

3 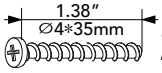

2 pcs

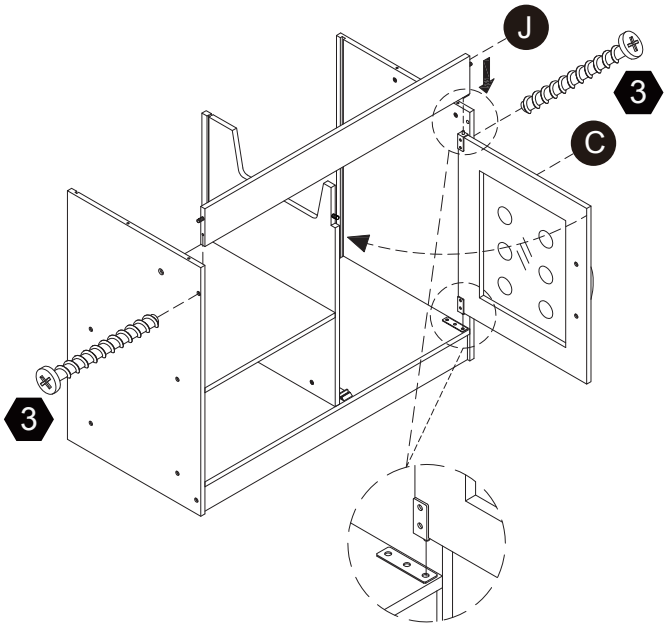

Step 10

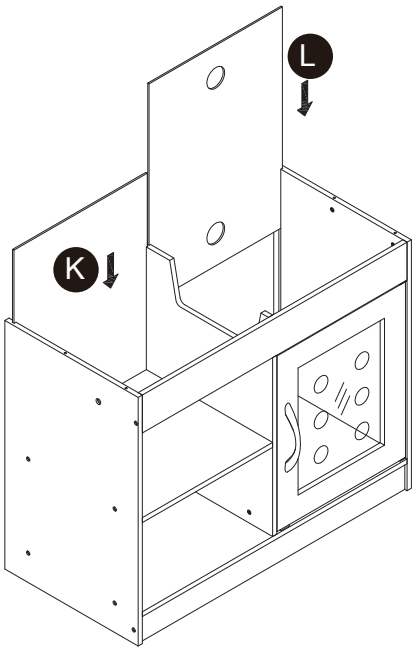

Step 11

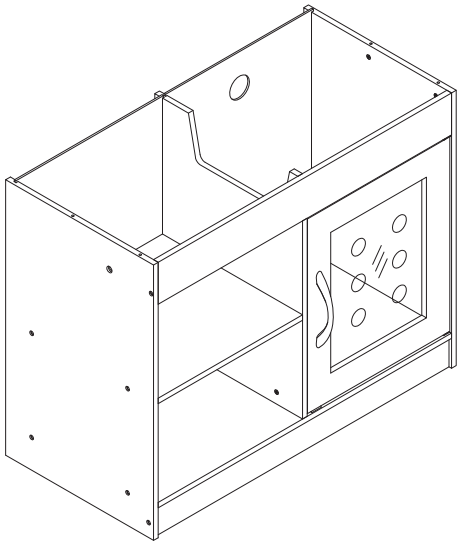

Step 12

3 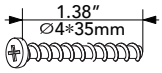

1 pc

5 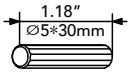

1 pc

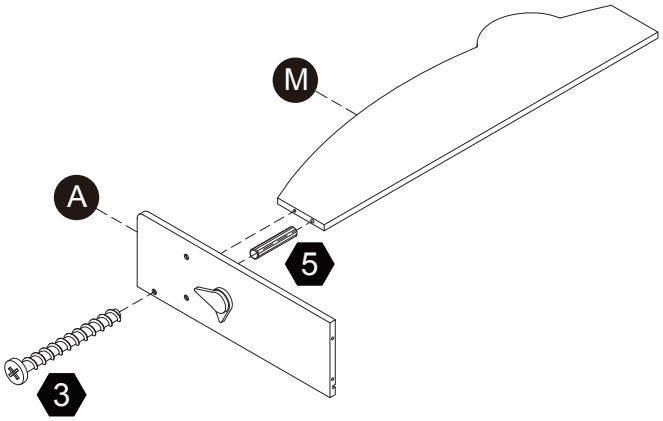

Questions?
Scan Here

Step 13

3 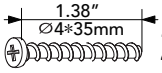

2 pcs

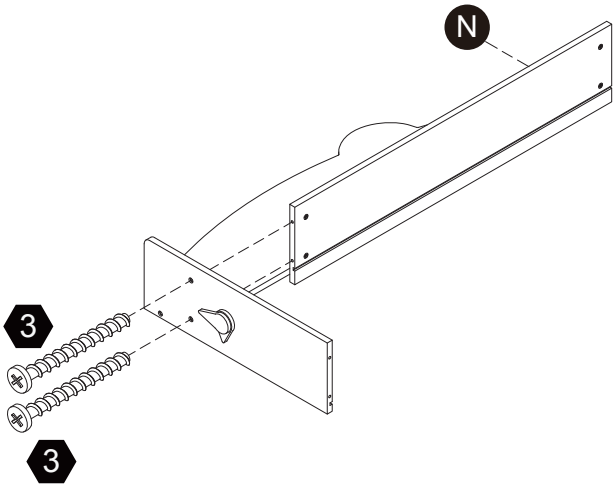

Step 14

3 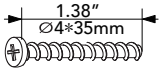

3 pcs

5 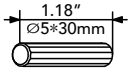

1 pc

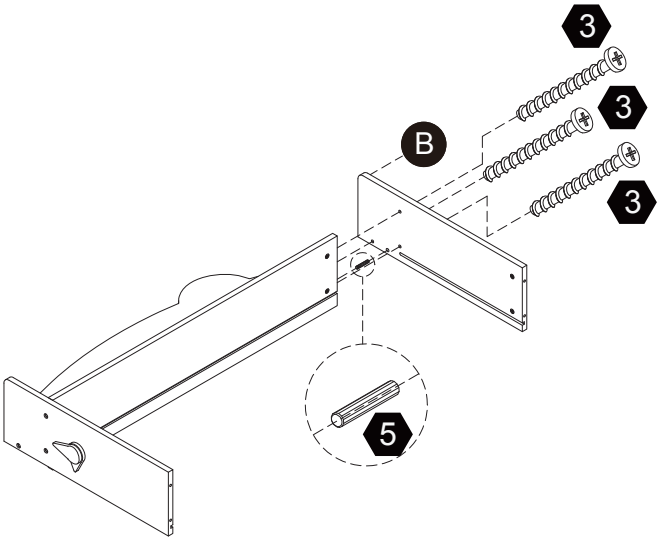

Step 15

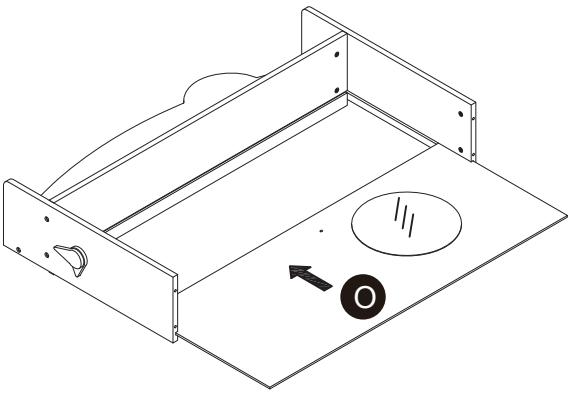

Step 16

3 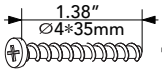

4 pcs

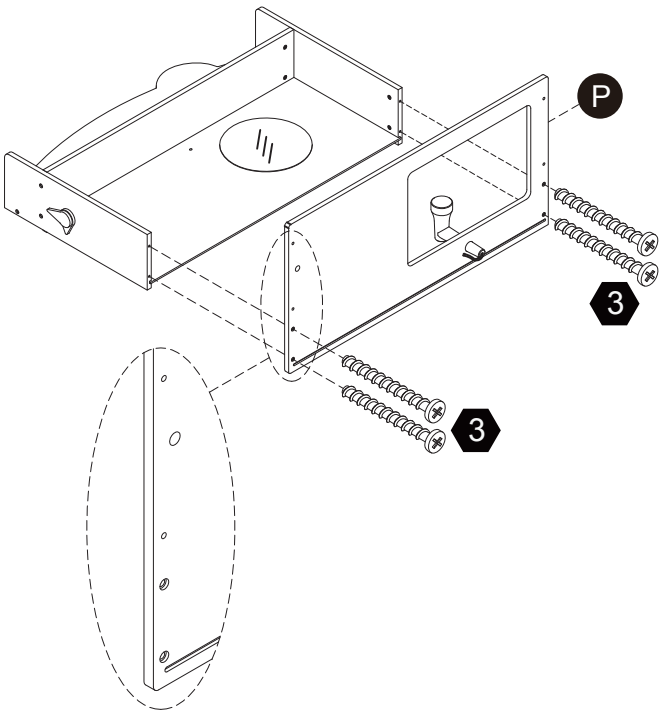

Questions?
Scan Here

Step 17

3 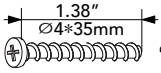

4 pcs

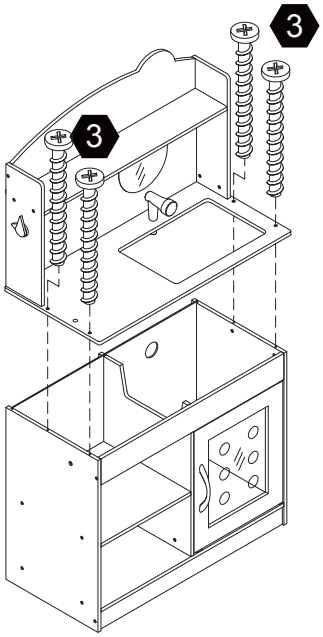

Step 18

6 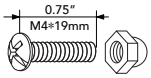

1 set

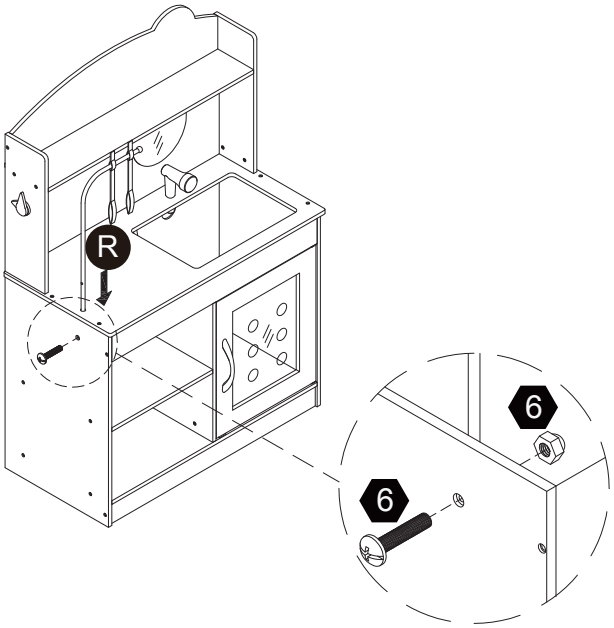

Step 19

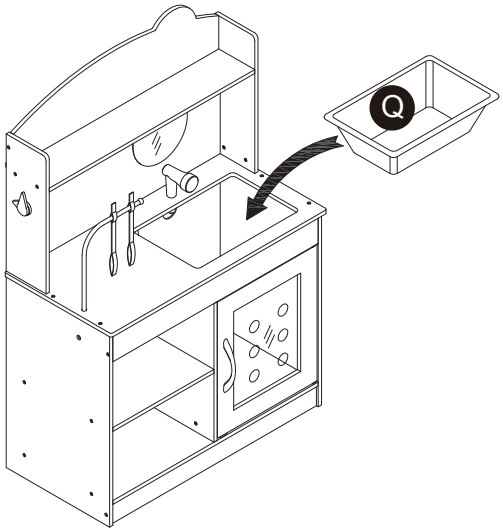

Step 20

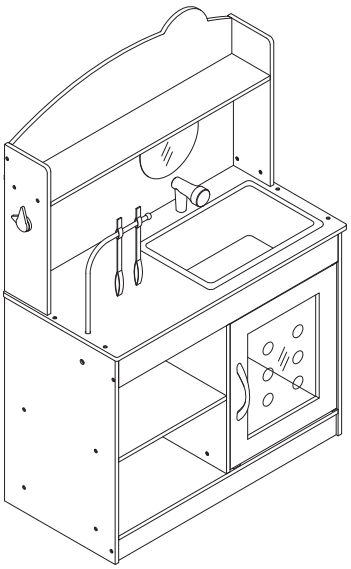

Questions?
Scan Here

WALL MOUNTING ASSEMBLY

For added safety and stability, it is recommended that the wall mounting hardware be installed. For safe mounting, it is essential to use wall anchors appropriate to your wall type (i.e. plaster, drywall, concrete, etc.). Mount to wood studs whenever possible.

Use a 1/4"(6.5mm) drill bit to pilot the hole. If mounting to plaster, wood panels, brick or other drywall please consult a qualified professional.

Please make sure you use the right hardware for your wall type for your safety.

⚠ WARNING:
Do not install on a wall where items can fall off and injure a child.

⚠ WARNING:
CHOKING HAZARD, Unassembled parts may be choking hazard to children 3 years and younger.

⚠ CAUTION:
Adult assembly required.
Hardware contains small screws with sharp points.
Keep unassembled parts out of reach of small children.

Hardware

A. Screw x 1
M4x16mm

B. Small Washer x 2
φ10Xφ5X1mm

C. Plastic Anchor x 1

D. Plastic Anchor x 1

E. Wood Screw x 1
φ4X32mm

F. Nut x1

G. Large washerx1
φ16Xφ6X1mm

Wrench ×1

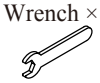

The following tools (not included) are repuired for assembly:

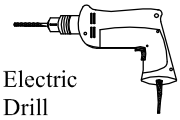

Electric Drill

1/4" (6.5mm) Drill Bit

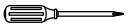

Phillips© Screwdriver

Step 1

Attach Plastic strip to back of product.
Hole predrilled
in product backboard #O

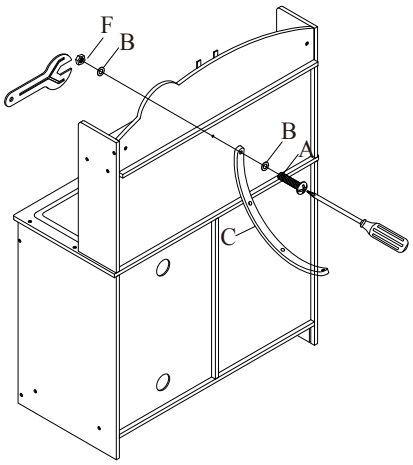

Step 2

Use 1/4" (6.5mm) drill bit to drill hole in wall

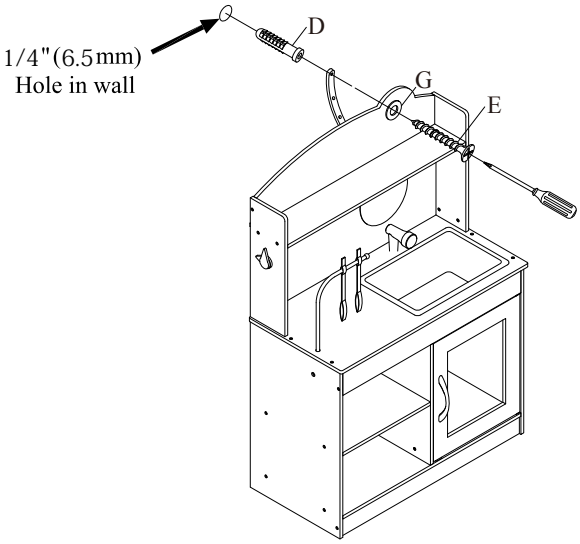

Do not drill an oversized hole or the wall anchor will not hold tightly into the wall.

Tap wall anchor into hole.

Secure product to wall with screw "E" through Plastic strap and into wall anchor.

Warning:
Serious or fatal injuries can occur from furniture tip-over. To help prevent furniture tip-over:
Use provided mounting hardware to secure furniture to the wall.
This may reduce but not eliminate the risk of furniture tip-over.
Do not allow children to climb on furniture.
Keep remote controls, toys, and other items that might attract children off of this product.
Unless specifically designed to accommodate, do not set televisions or other heavy objects on top of this product.