# INSTRUCTION MANUAL

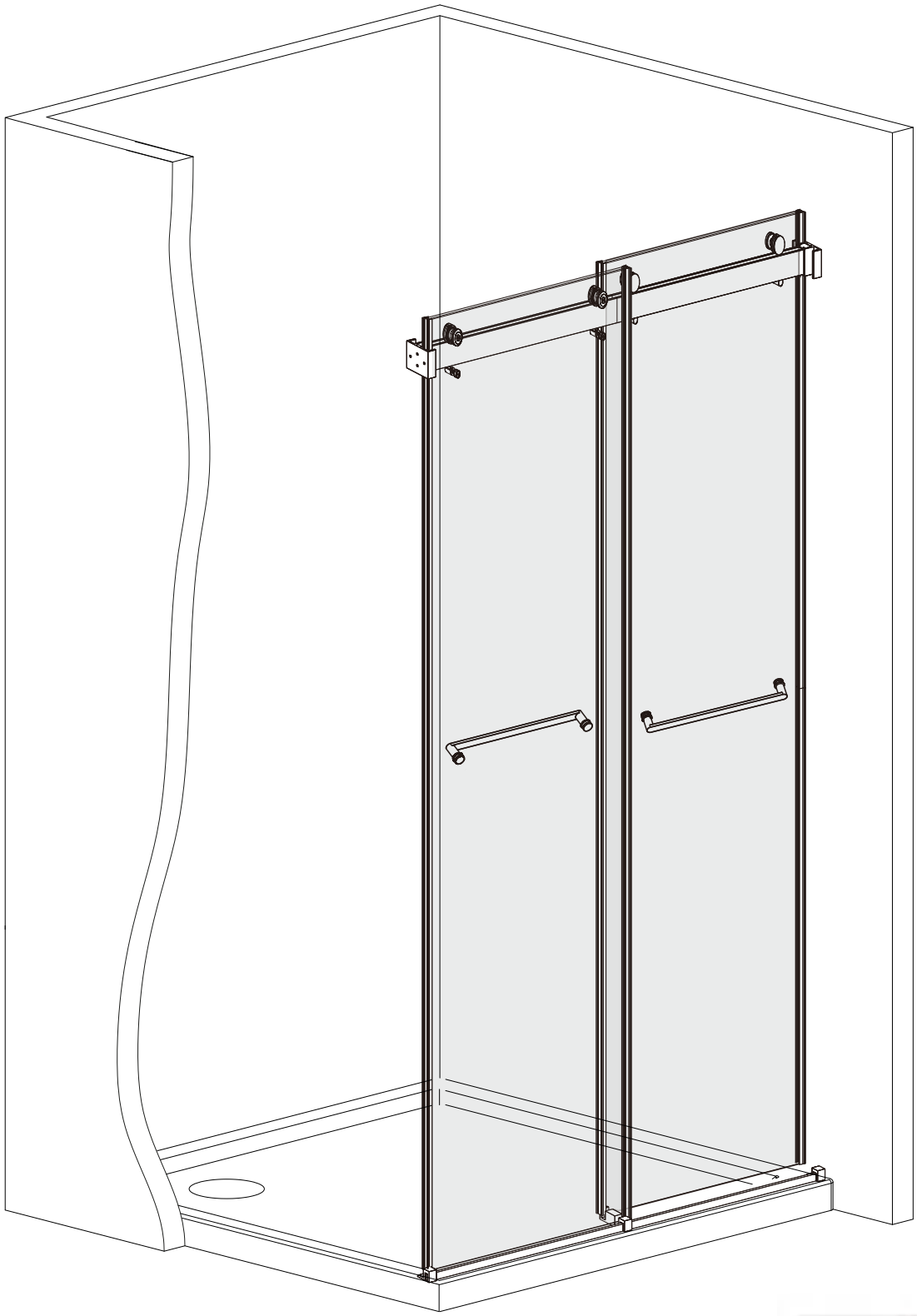

| | | |
|---|---|---|
| PF-92 | 1219x1879MM | 48"x74" |
| | 1524x1574MM | 60"X62" |
| | 1524x1879MM | 60"x74" |



Please keep this manual and product code number for future reference and for ordering replacement parts if necessary.

## GENERAL INSTRUCTIONS

Read this manual carefully and completely before proceeding.

.It is recommended that you wear safety glasses at all times during the installation.

## INSTALLATION OVER CERAMIC TILES

If your shower door is to be installed over ceramic tiles,the tiles should lay completely under the wall jamb.Silicone should be used to seal the gap where the ceramic tiles meet the fixed panel.

## NOTICE

.Caulking: no sealant is required inside the shower,unless otherwise stated.

.Some models are equipped with clear sealing gaskets.

## CARE FOR YOUR SHOWER DOOR

Never use scouring powder pads or sharp instruments on metal pieces or glass panels.

An occasional wiping down with a mild soap diluted in water is all that is needed to keep the panels and aluminum parts looking new.

.We recommend wiping the glass panels with a squeegee after each use.

Product specifications are subject to change without notice

# CHOOSE CONFIGURATION

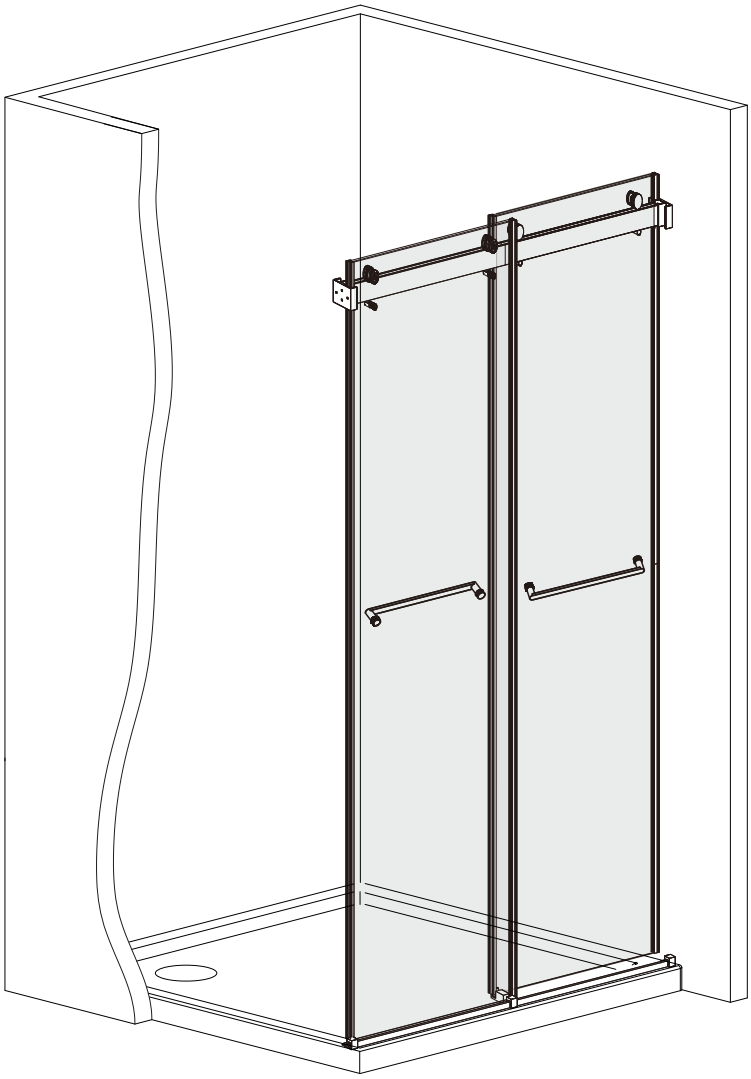

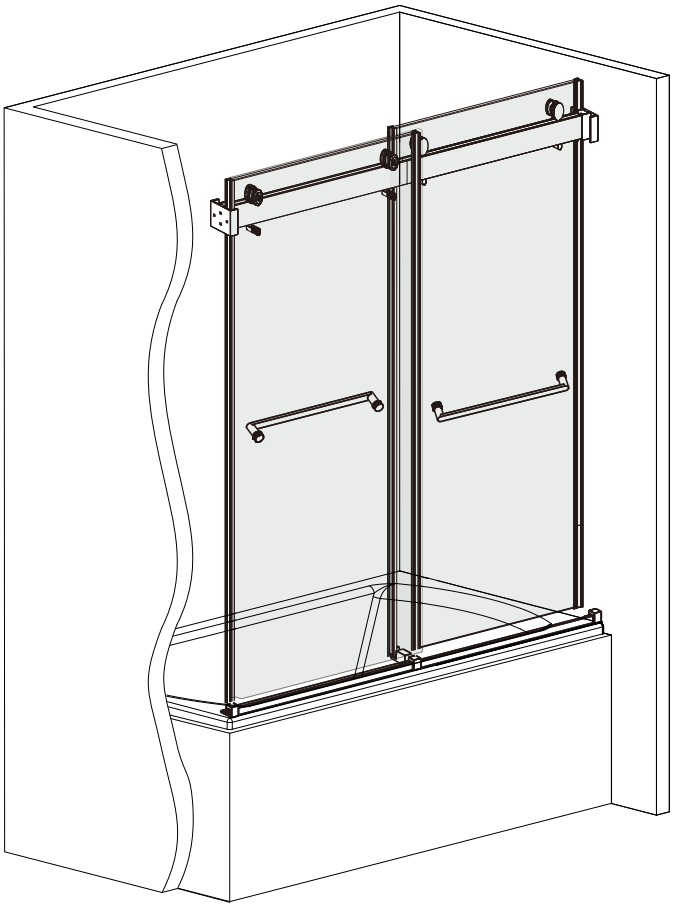

# PARTS LISTING

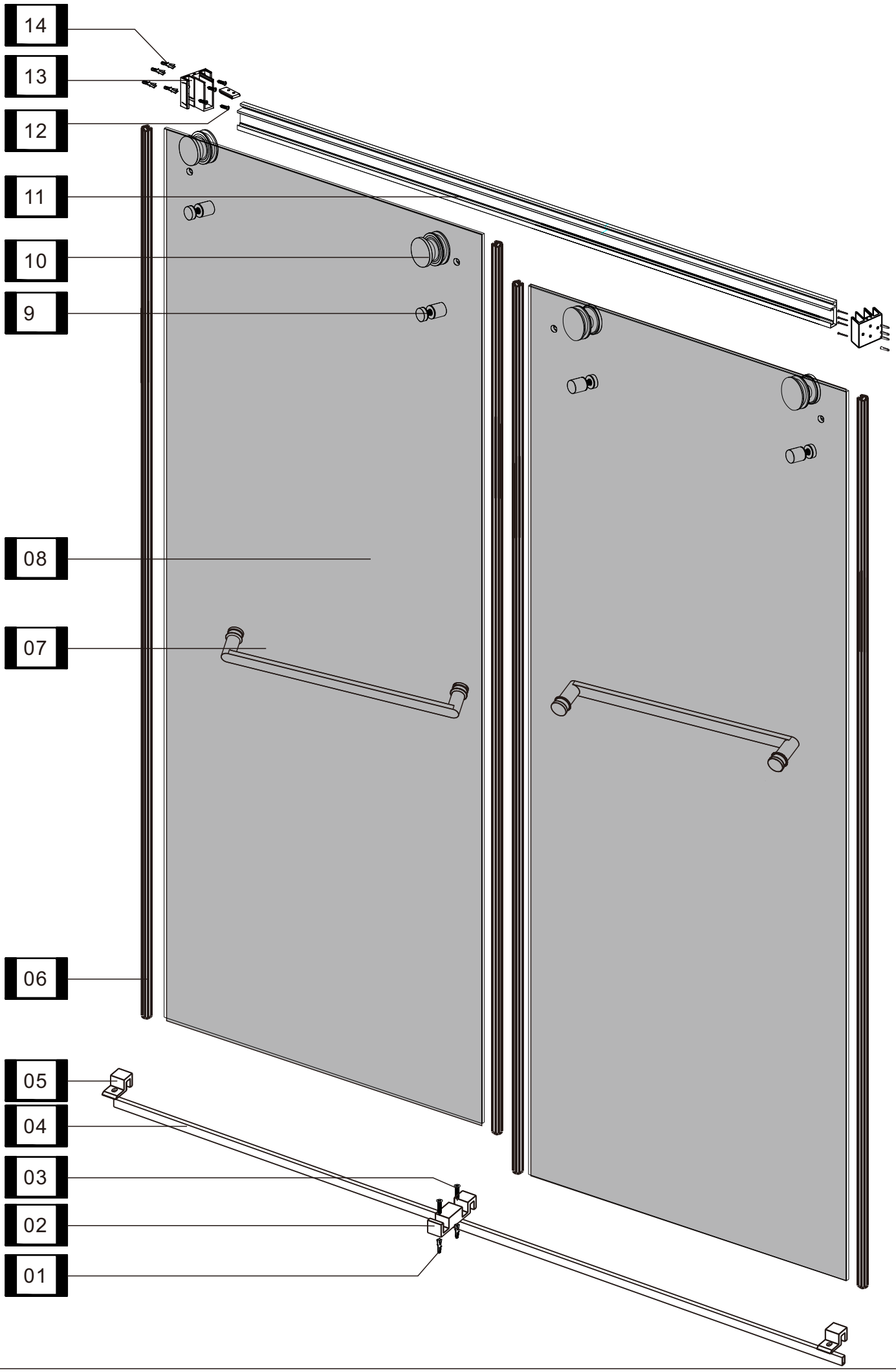

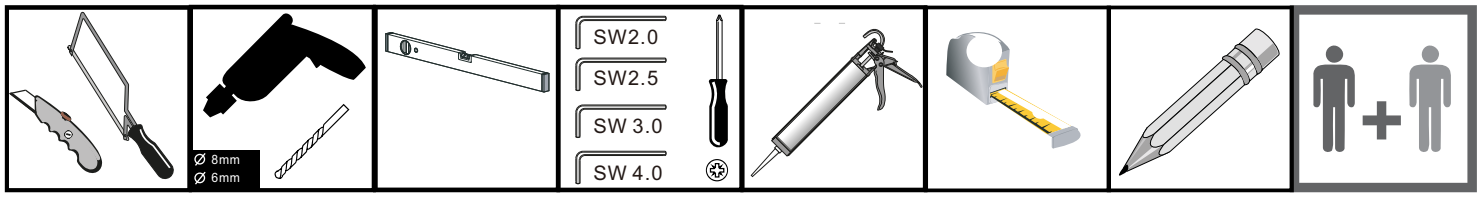


## ◆ Box Contents

| Item | Part Name | Picture | Qty |
|---|---|---|---|
| 1 | 6mm Wall Anchor |  | 4 |
| 2 | Stainless Steel Bottom Guide Block | 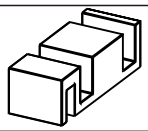 | 1 |
| 3 | 4x30 Flat Head Screw | 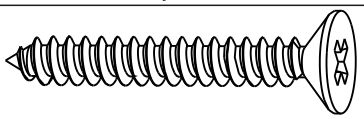 | 4 |
| 4 | Stainless Steel Bottom Water Seal Strip | 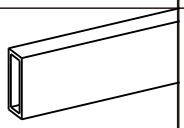 | 1 |
| 5 | Bottom Seal Retainer Clip | 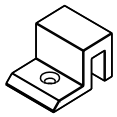 | 2 |
| 6 | Waterproof Buffer Seal Strip | 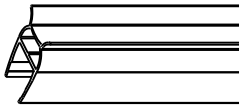 | 4 |
| 7 | 440mm Stainless Steel Handle with Holes |  | 2 |
| 8 | Sliding Glass Panel | 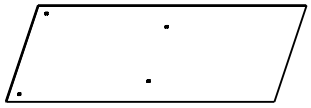 | 2 |
| 9 | Glass Anti-Jump Clip | 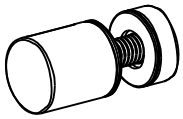 | 4 |
| 10 | Roller Assembly |  | 4 |
| 11 | Top Track | 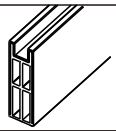 | 1 |
| 12 | 5x35 Round Head Screw | 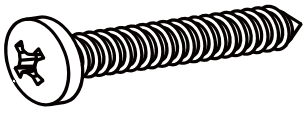 | 8 |
| 13 | Stainless Steel Wall Bracket / Wall Mount | 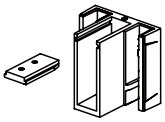 | 2 |
| 14 | 8mm Wall Anchor |  | 8 |

1

Use a level or a straightedge to check if the shower threshold is level.
If necessary, adjust the threshold until it is completely level.

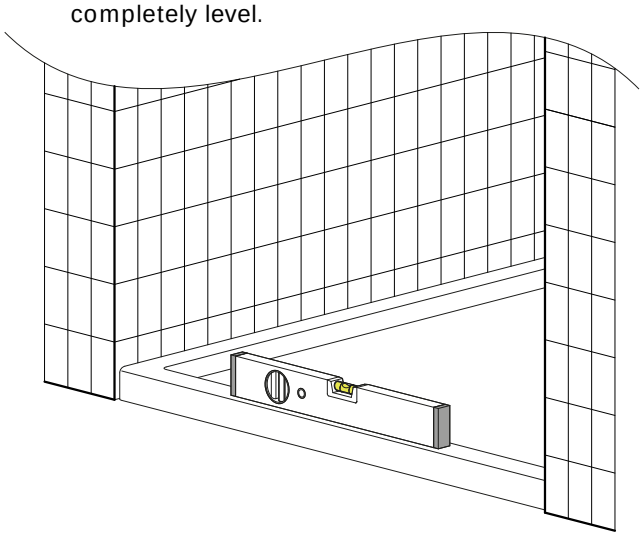

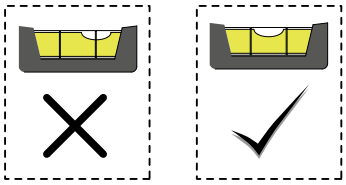

1.1

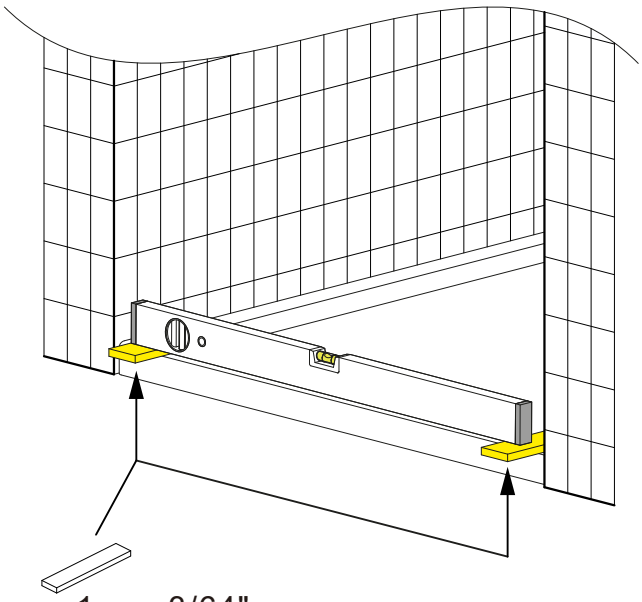

1mm 3/64"

If it is not level, adjust the threshold until it is completely level.

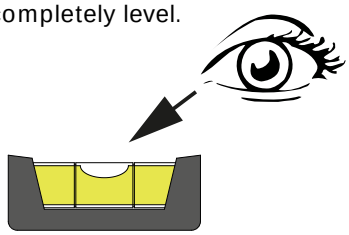




1.2

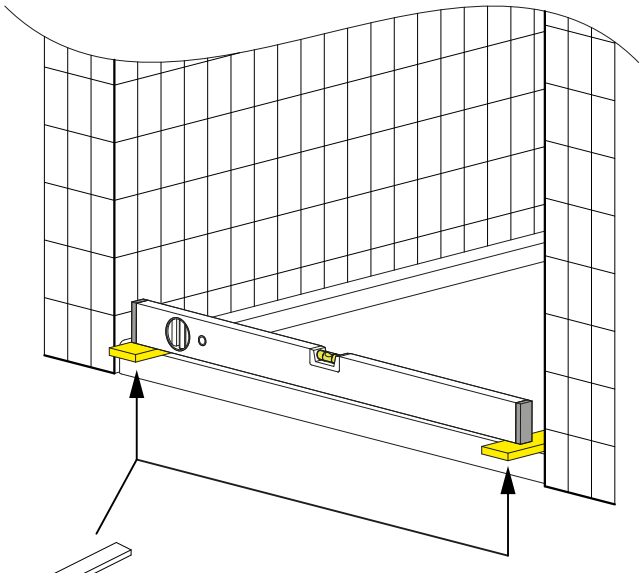

1-5mm

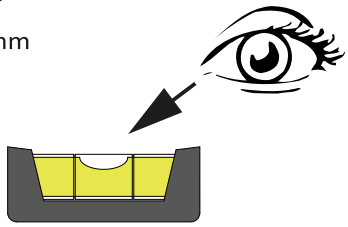




The threshold must be perfectly level.

1.3

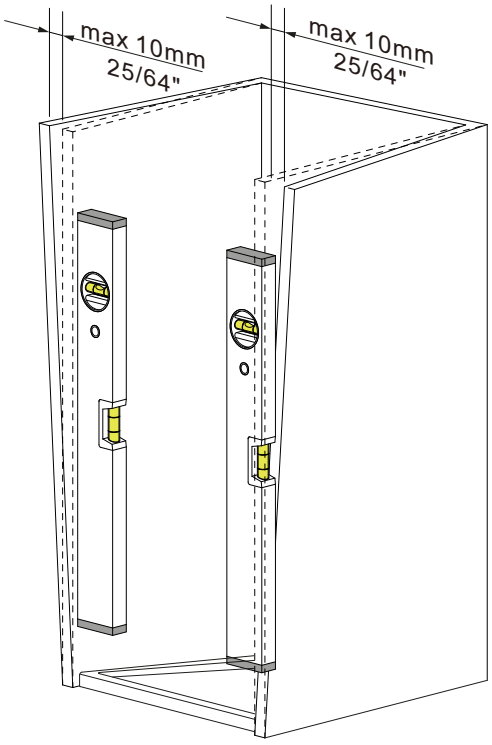


max 10mm 25/64"

> 10mm !

The installation shown is based on a vertical wall and a level base.If these conditions are not met, make the necessary adjustments.

## 2

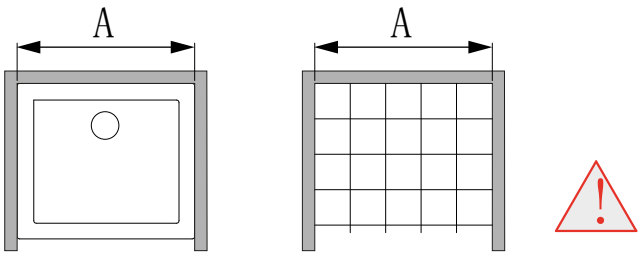


| | 1524 60" |
|---|---|
| A | 1524-1534<br>60"-60-13/32" |

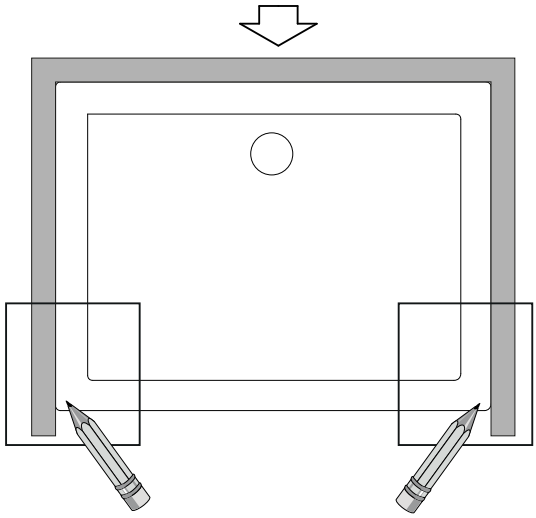

## 3

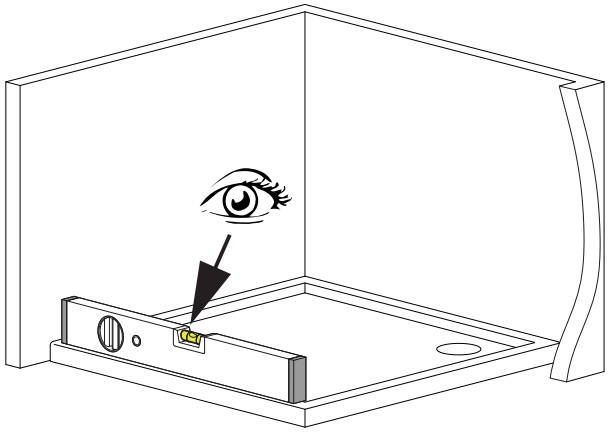

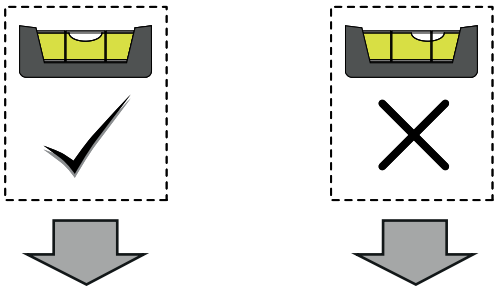

## 4

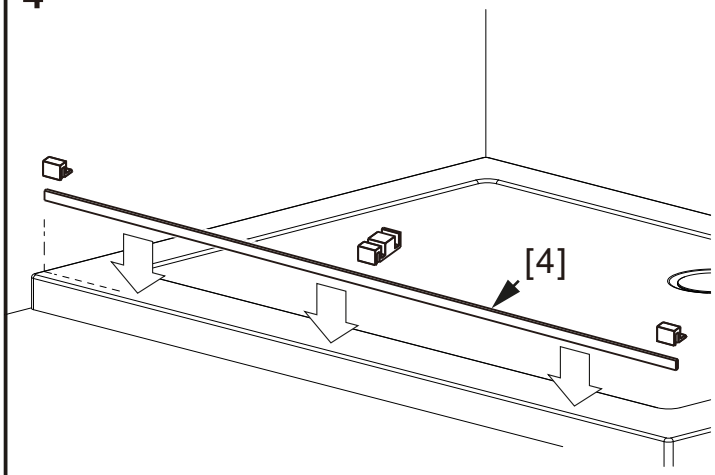


The lower water assembly is coming apart.

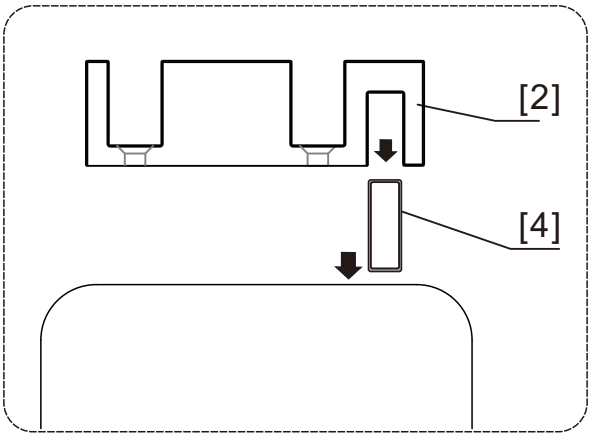


## 4.1

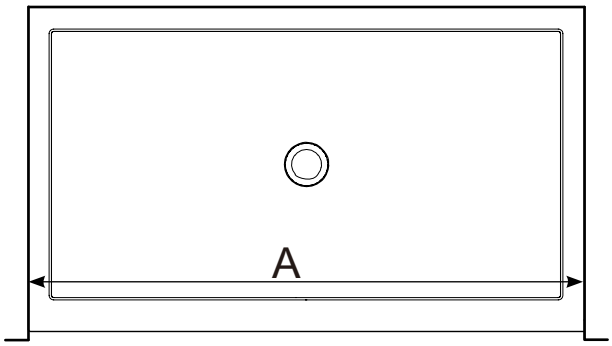


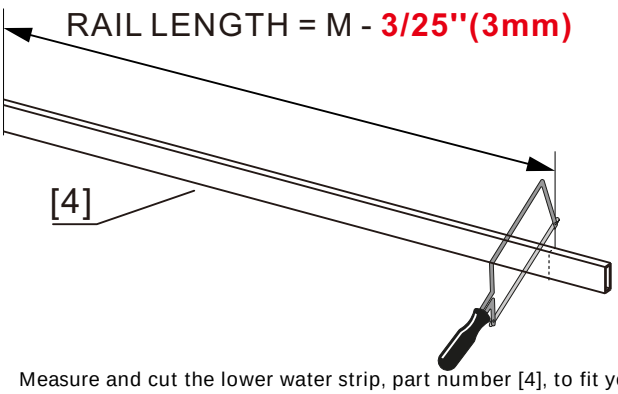


Measure and cut the lower water strip, part number [4], to fit your installation space.

## 3.2

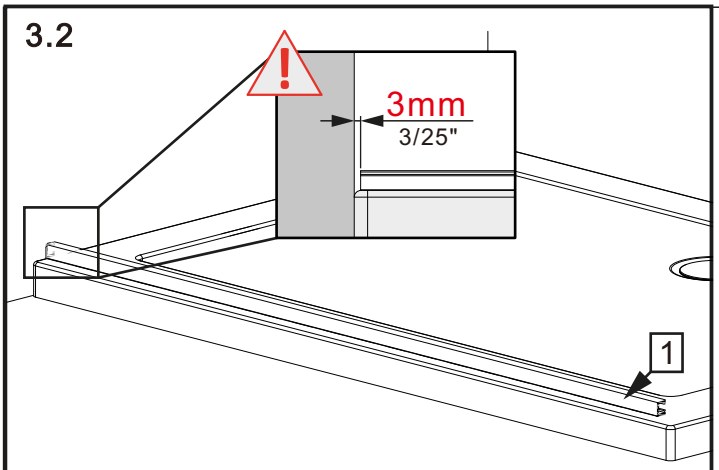


## 3.4

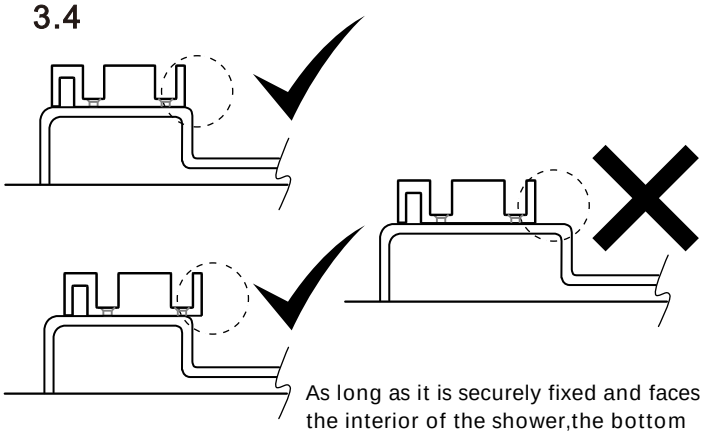

As long as it is securely fixed and faces the interior of the shower,the bottom guide rail can be hung on the base.

## 3.3

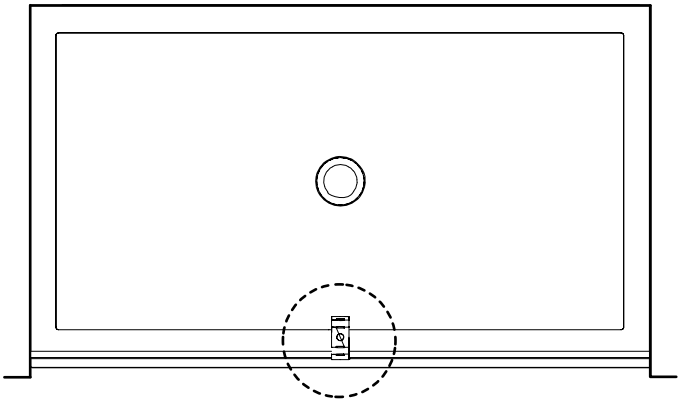

## 3.5

Please unfold the lower sliding guideto make it easier to install the movable glass later.

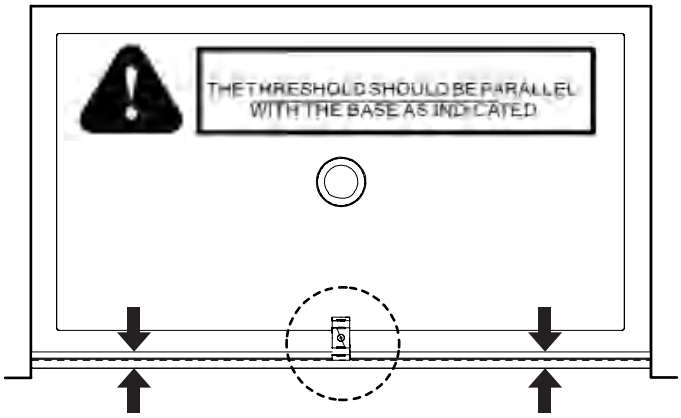


Mark the center hole with a pencil.

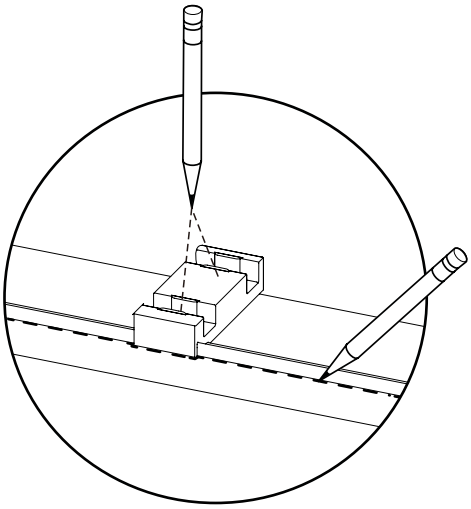

## 3.6

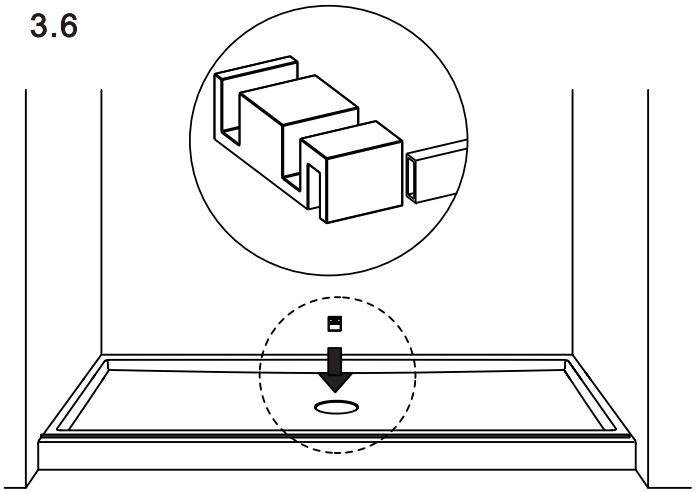

Installation of the lower water strip.

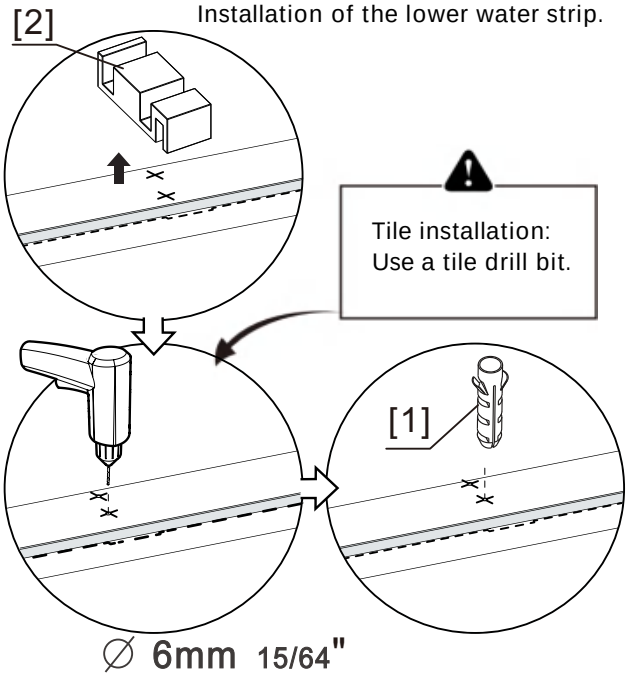


Tighten the screws.

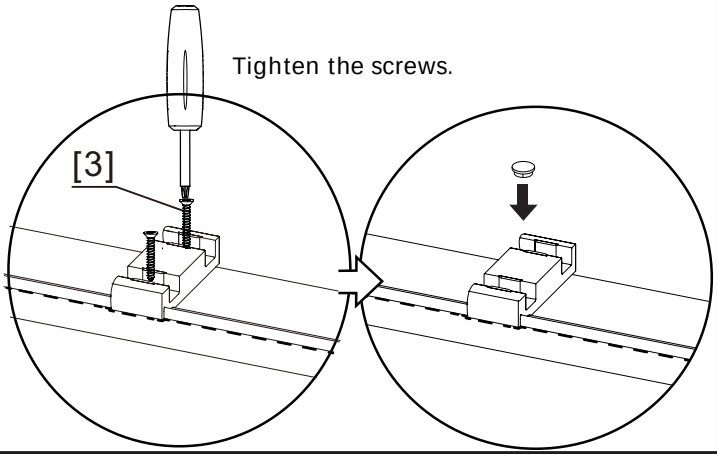

4

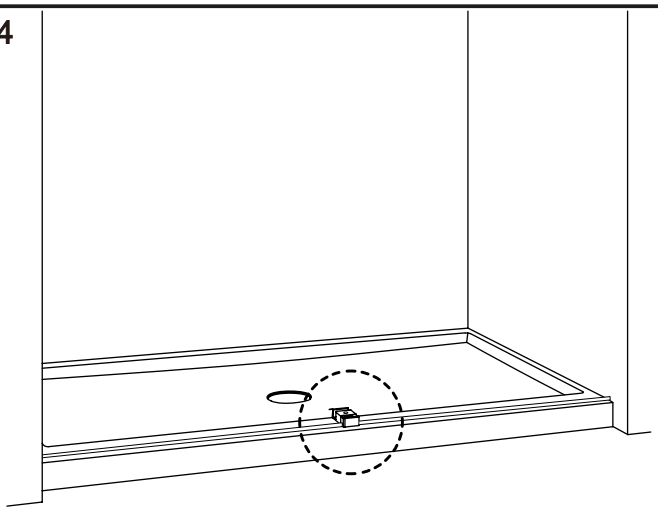

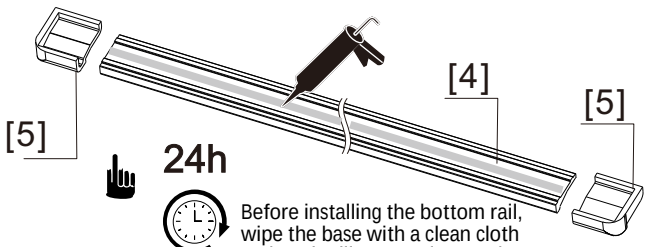


Before installing the bottom rail, wipe the base with a clean cloth and apply silicone sealant to the lower water strip.

4.1

4.2

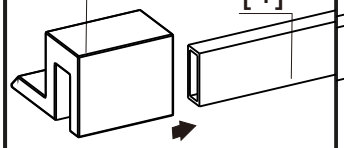


4.3

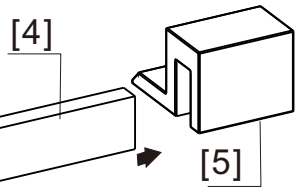


The lower water assembly is coming apart.

4.4

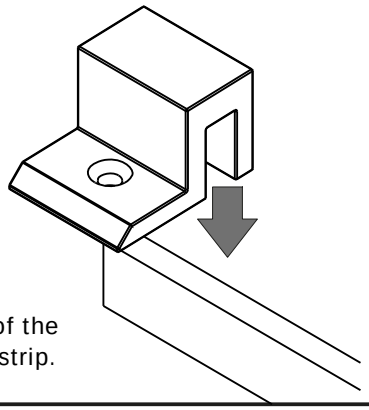

Installation of the lower water strip.

4.5

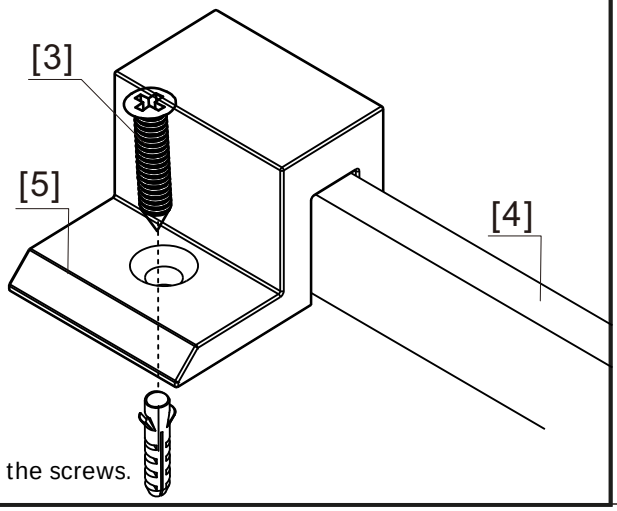


Tighten the screws.

4.6

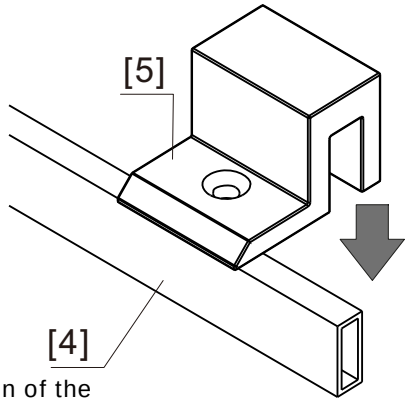


Installation of the lower water strip.

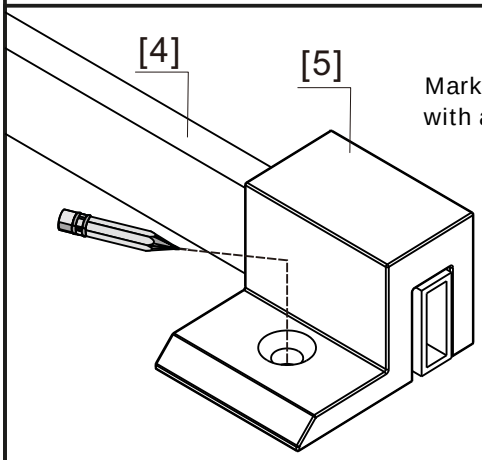


Mark the center hole with a pencil.

4.7

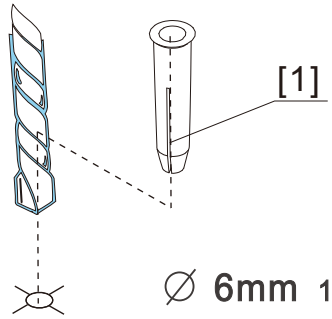


4.8

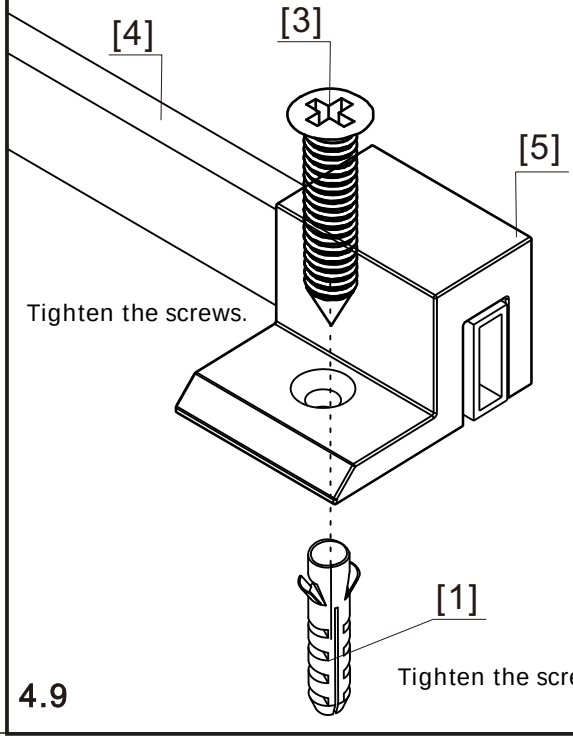


Tighten the screws.

Tighten the screws.

4.9

5

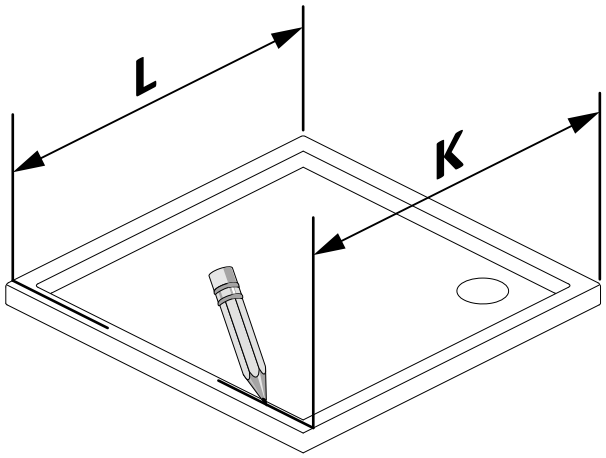
L
K

K = L

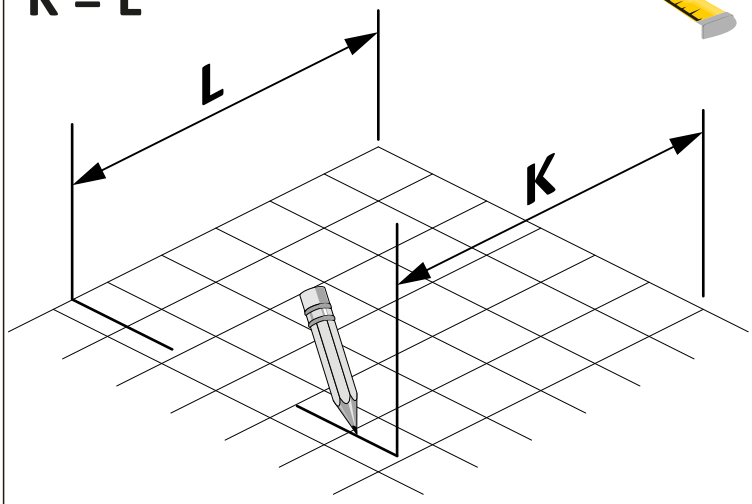
L
K

5.1

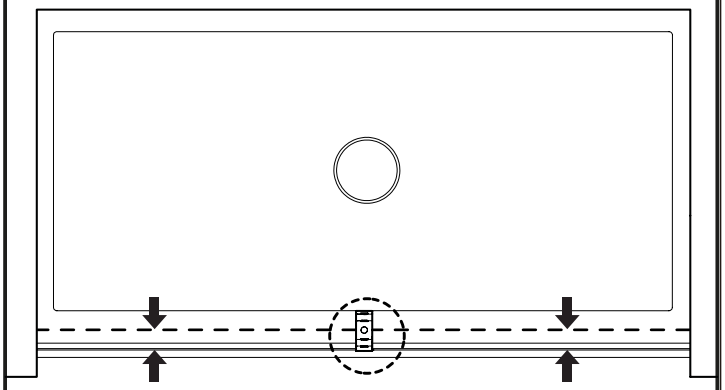

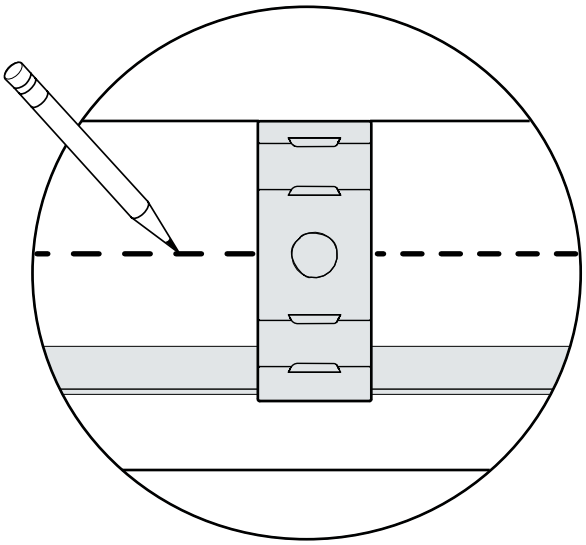

5.2

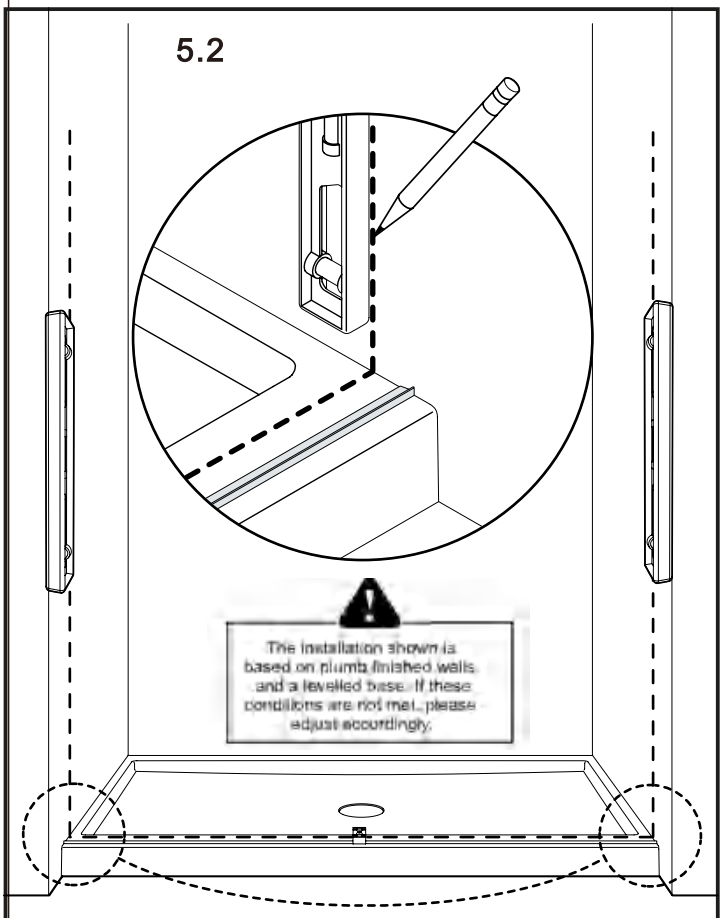
This installation shown is based on plumb finished walls and a levelled base. If these conditions are not met, please adjust accordingly.

5.3

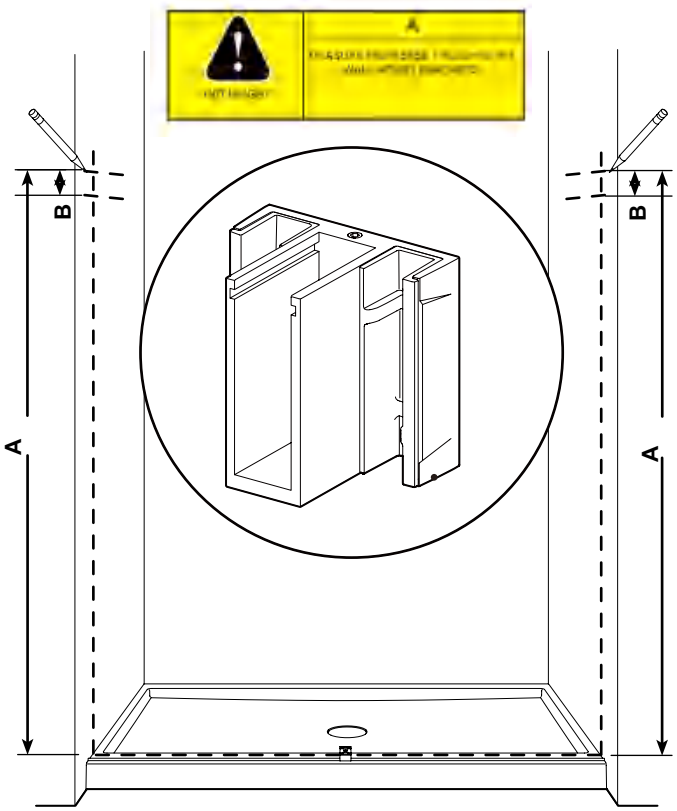
B
B
A
A

6

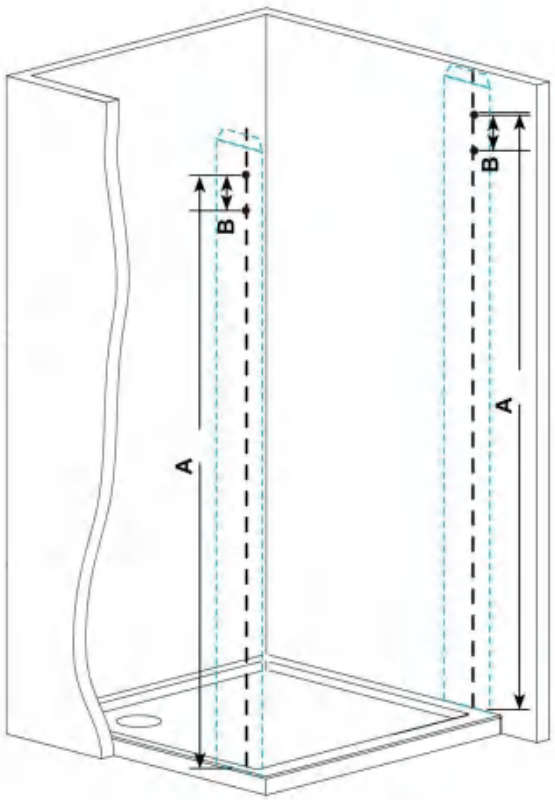


Install the top rail wall bracket.

| product Height" | A | B |
|---|---|---|
| 60"(1524mm) | 57-1/10"(1451mm) | 1-1/10" 28mm |
| 62"(1574mm) | 59-1/10"(1501mm) | |
| 72"(1828mm) | 69-1/10"(1755mm) | |
| 74"(1879mm) | 71-1/10"(1805mm) | |
| 76"(1930mm) | 72-1/10"(1857mm) | |

Push the wall-mounted bracket against the wall and mark its position.

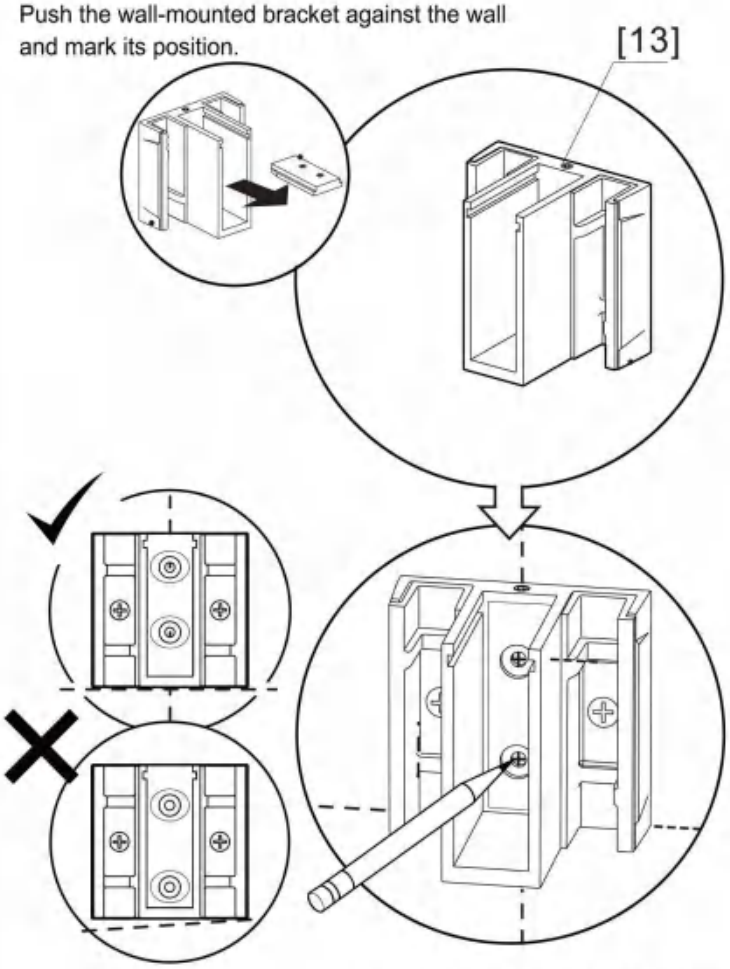


Mark the center hole with a pencil.

7

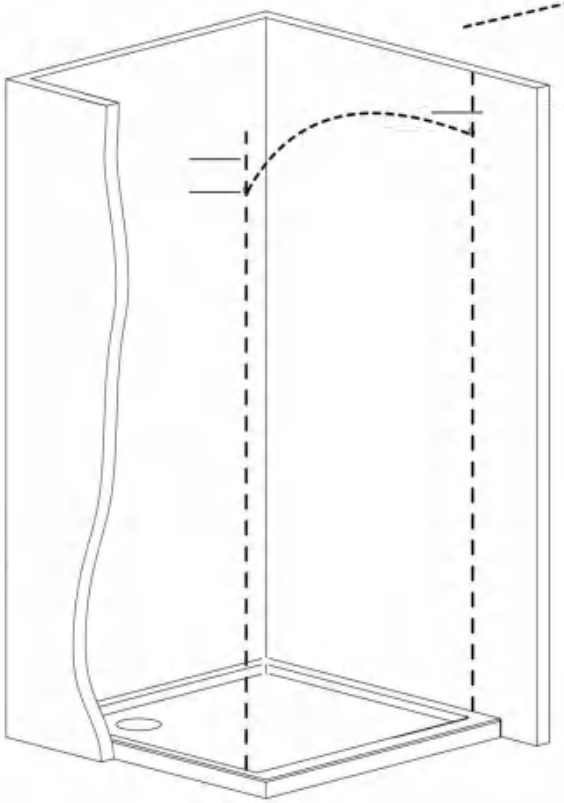

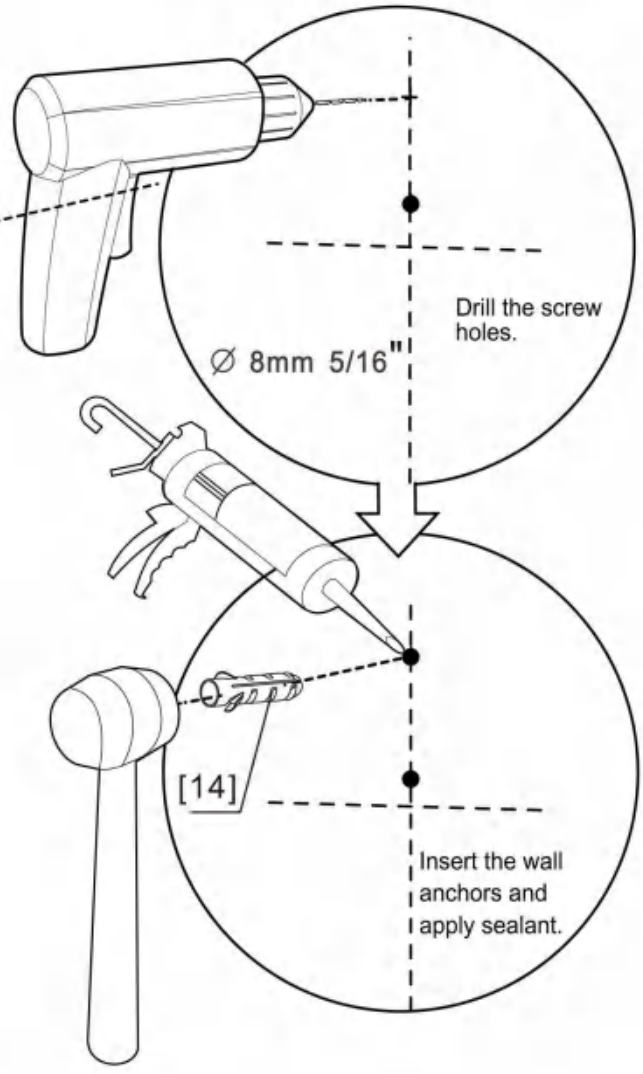

**8**

Install the top rail wall bracket.

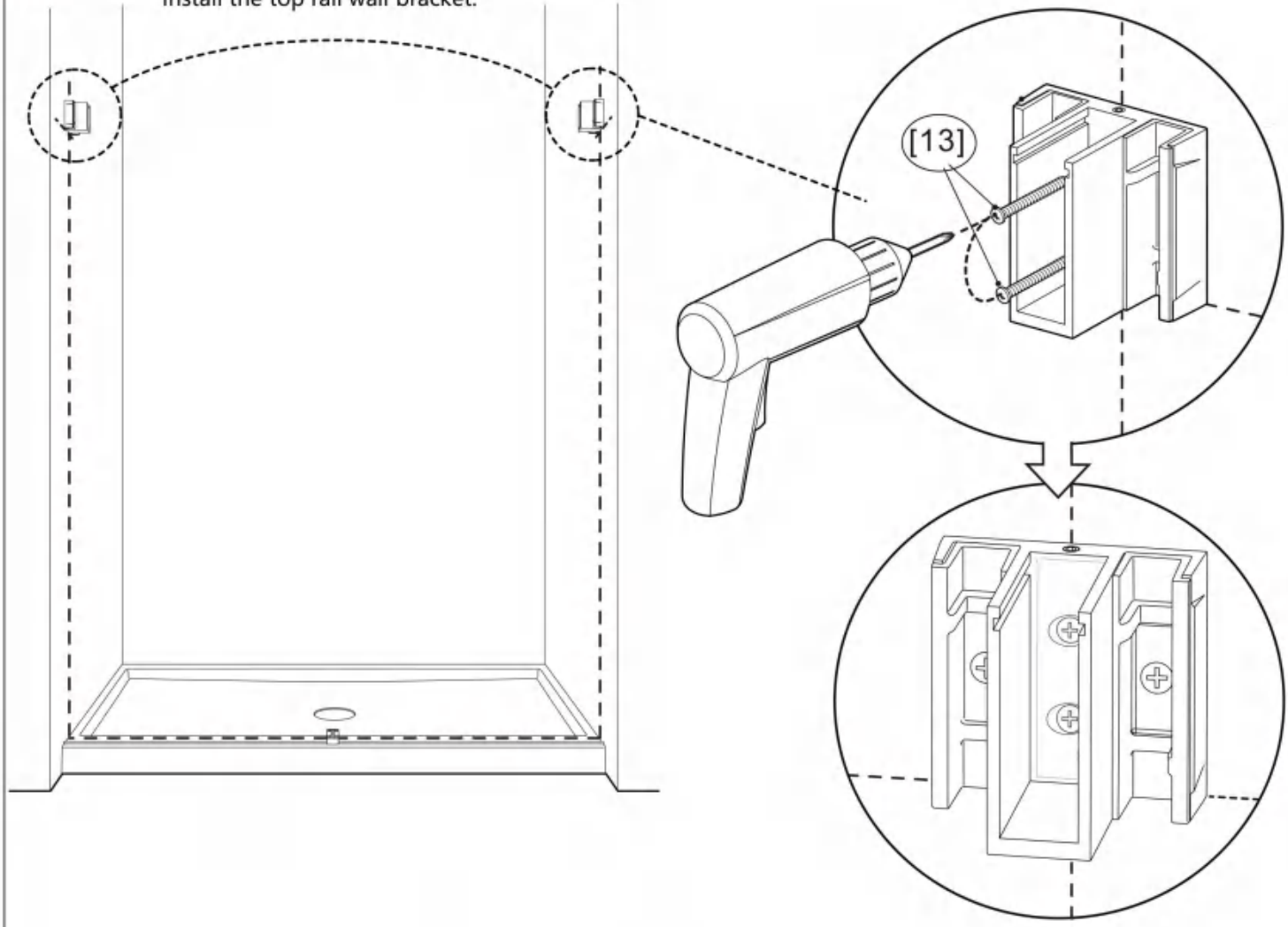


**9**

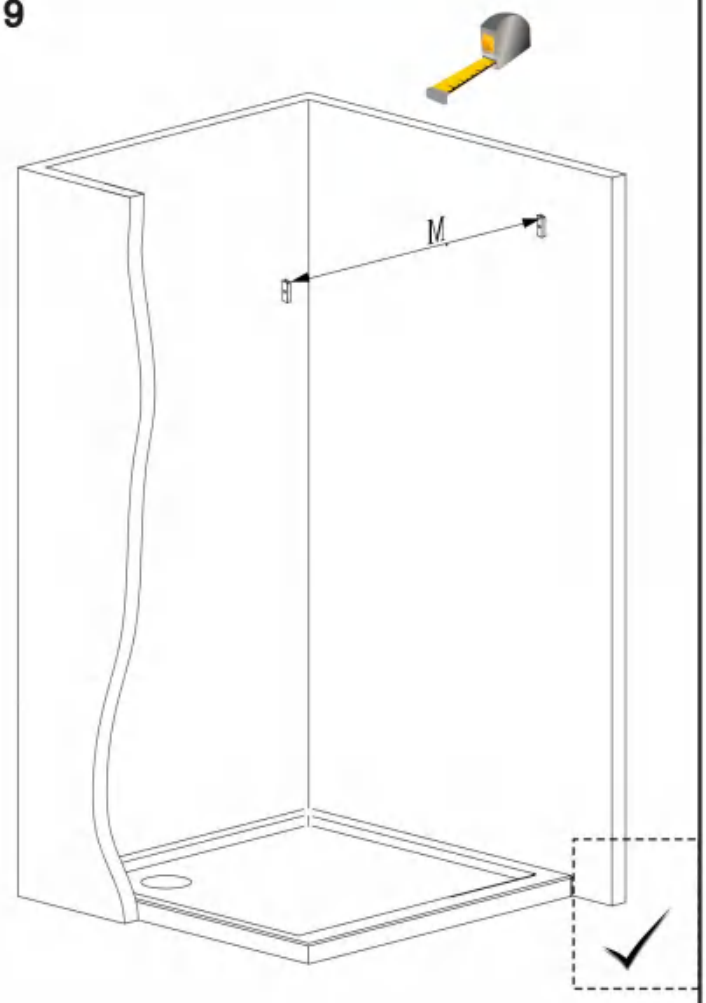


**9.1**

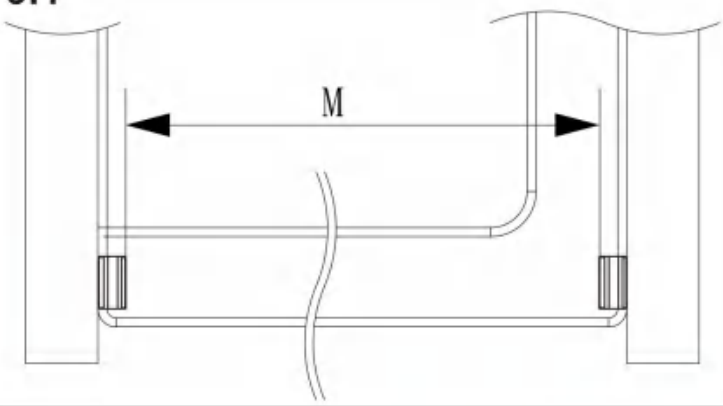


RAIL LENGTH = A - 1 3/16"(30mm)

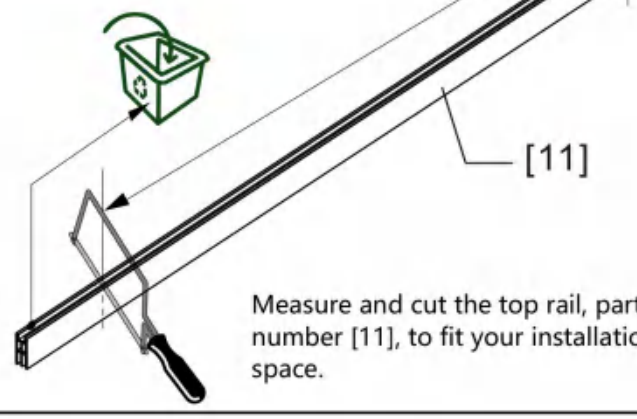


Measure and cut the top rail, part number [11], to fit your installation space.

## 10

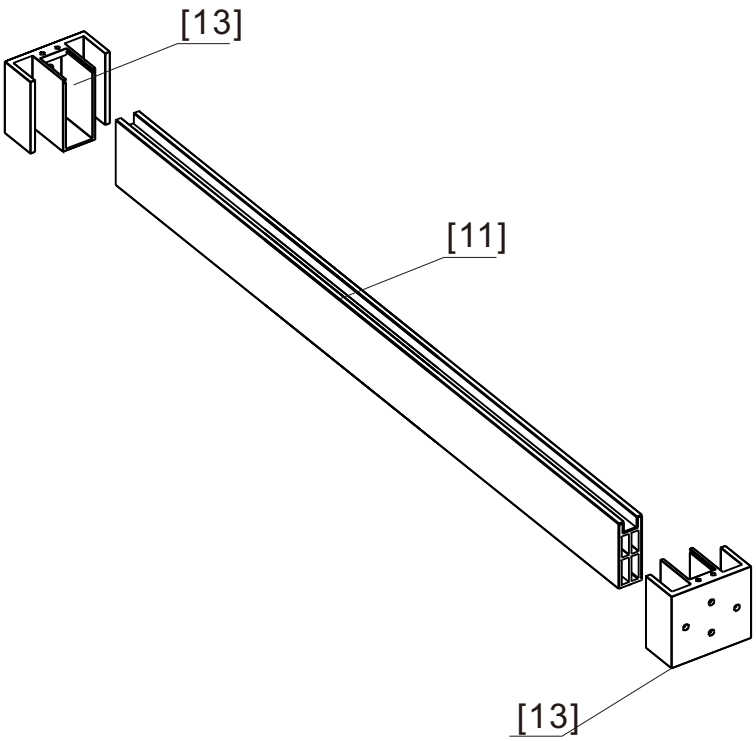


Installation diagram of the accessories on the top rail.

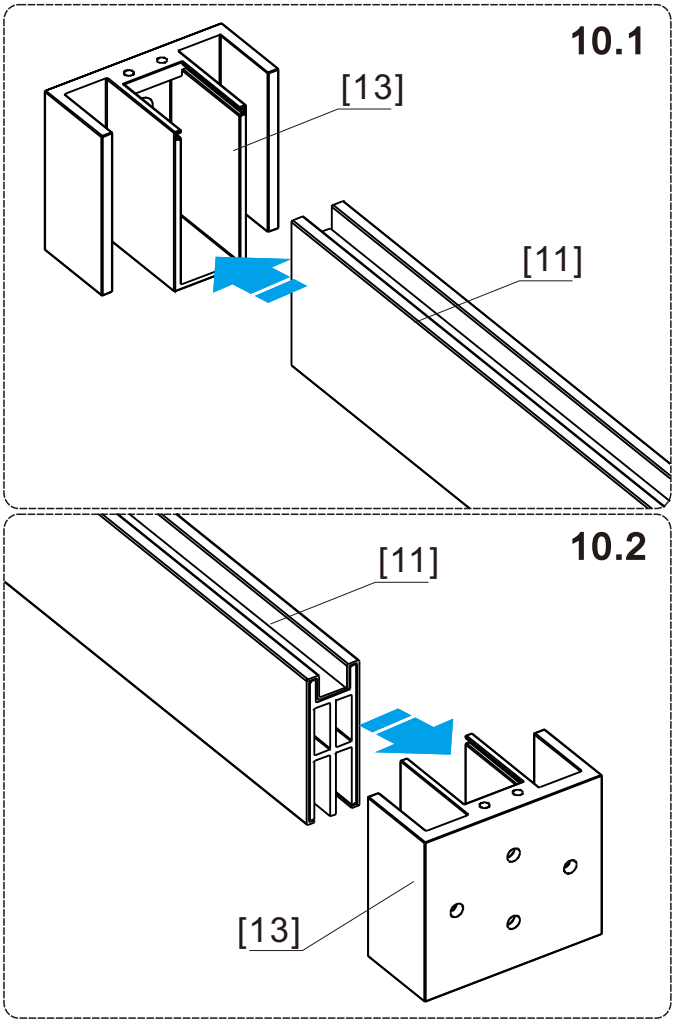


## 11

Insert the top guide rail into the wall brackets on both sides.

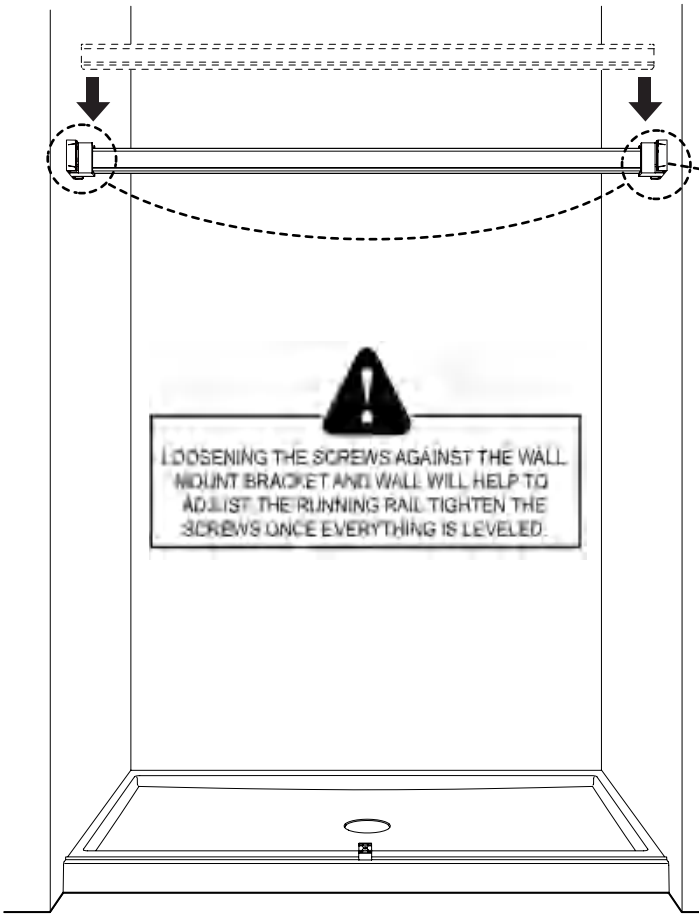


Use a hex key to tighten the centering screws on the wall bracket [13].

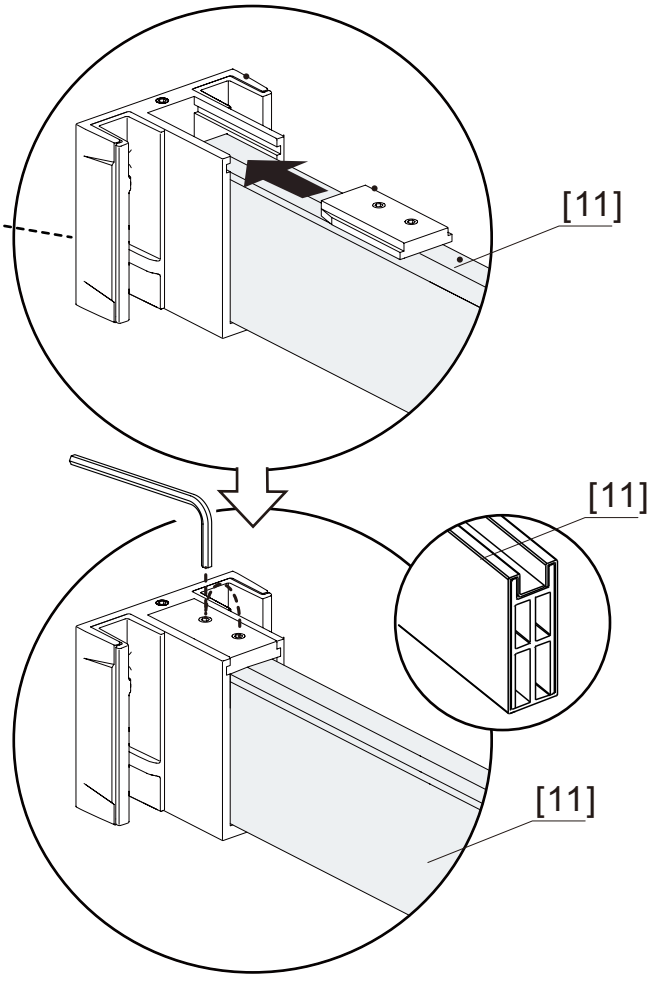

## 12

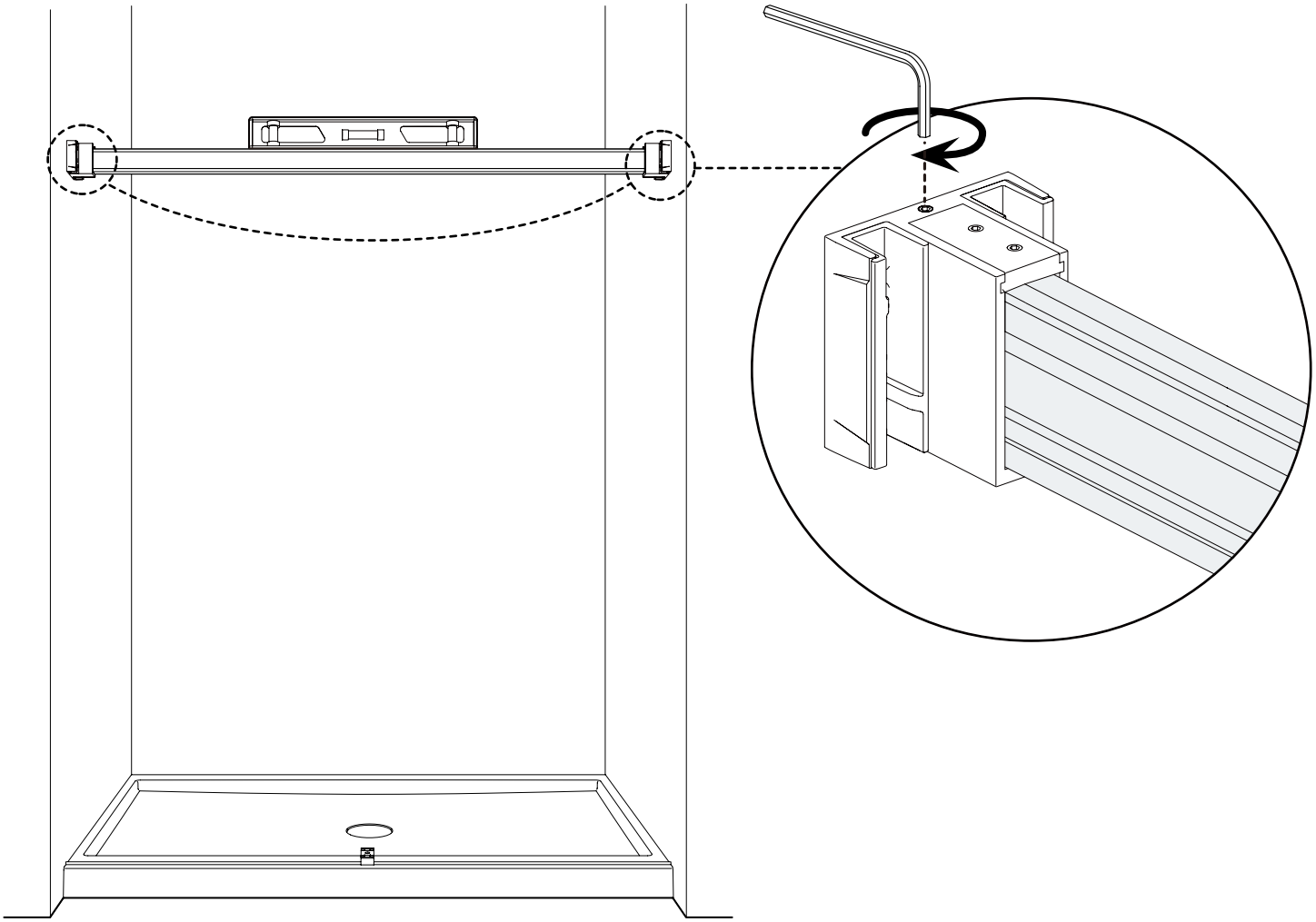

## 13

Install the two rollers on the sliding door.

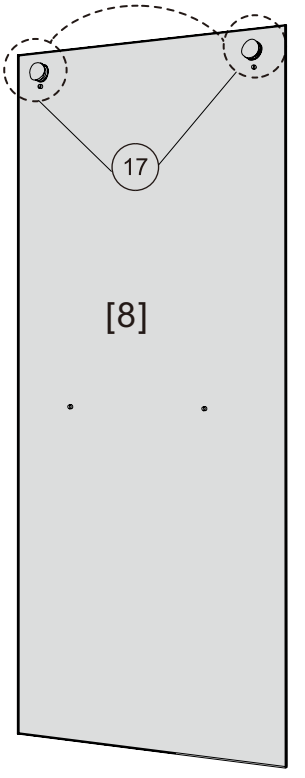


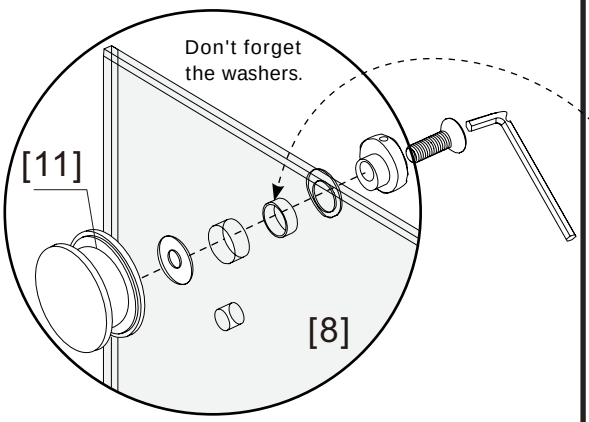


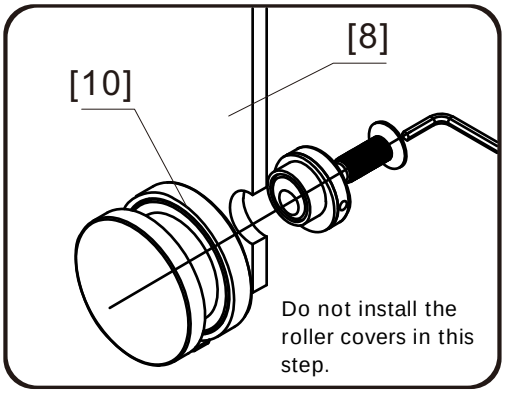


Please install both rollers at the same level.

A

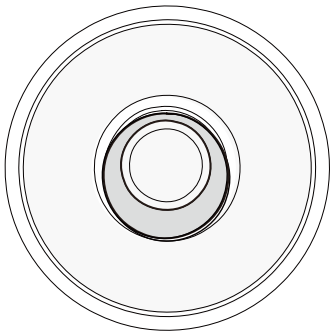

The door panel is in the lowest position.

B

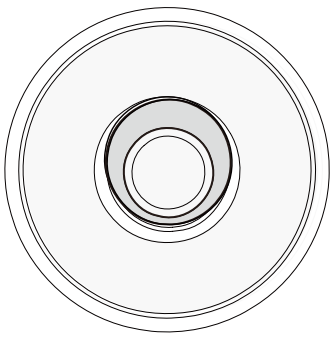

The door panel is in the highest position.

## 14

Install the door panel.

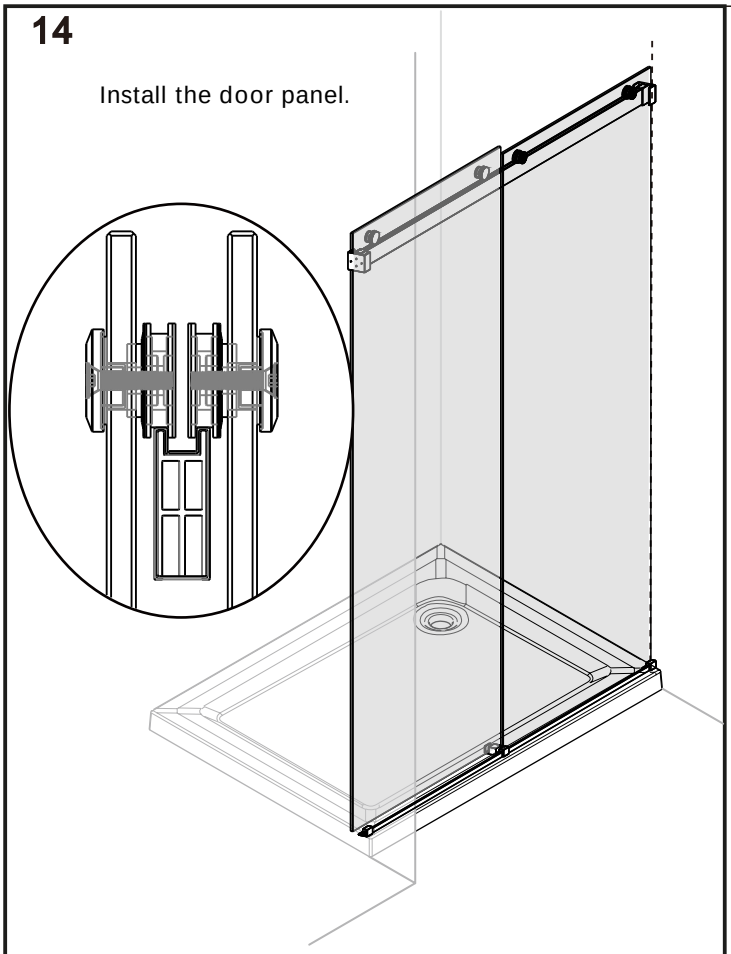

## 14.1

Install the rollers onto the top rail as shown in the diagram.

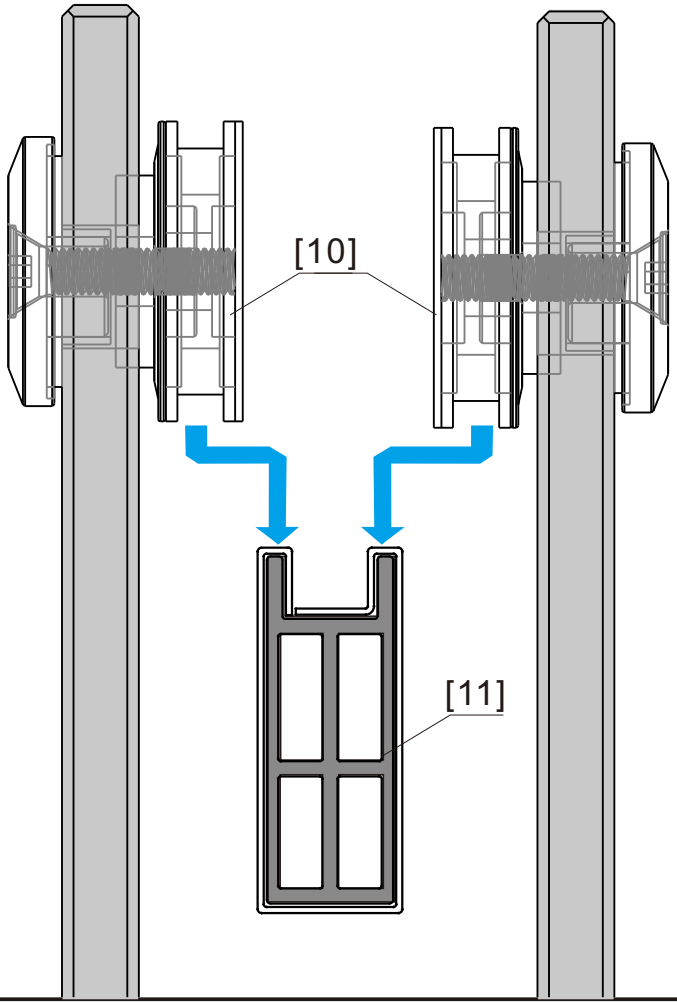


## 14.2

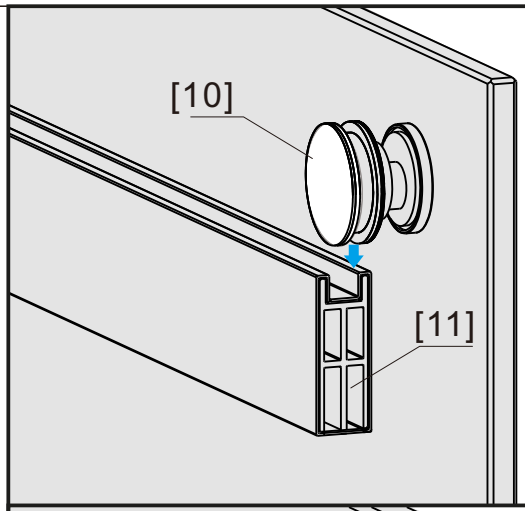


## 14.3

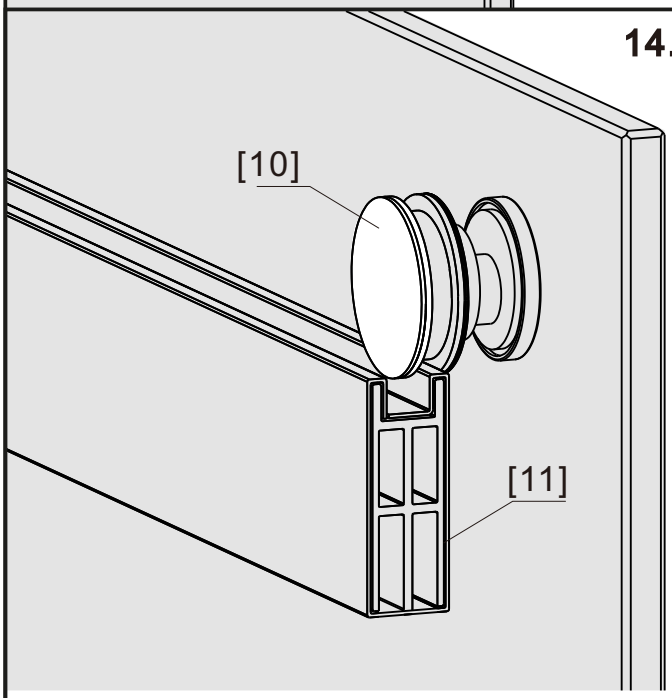


## 14.4

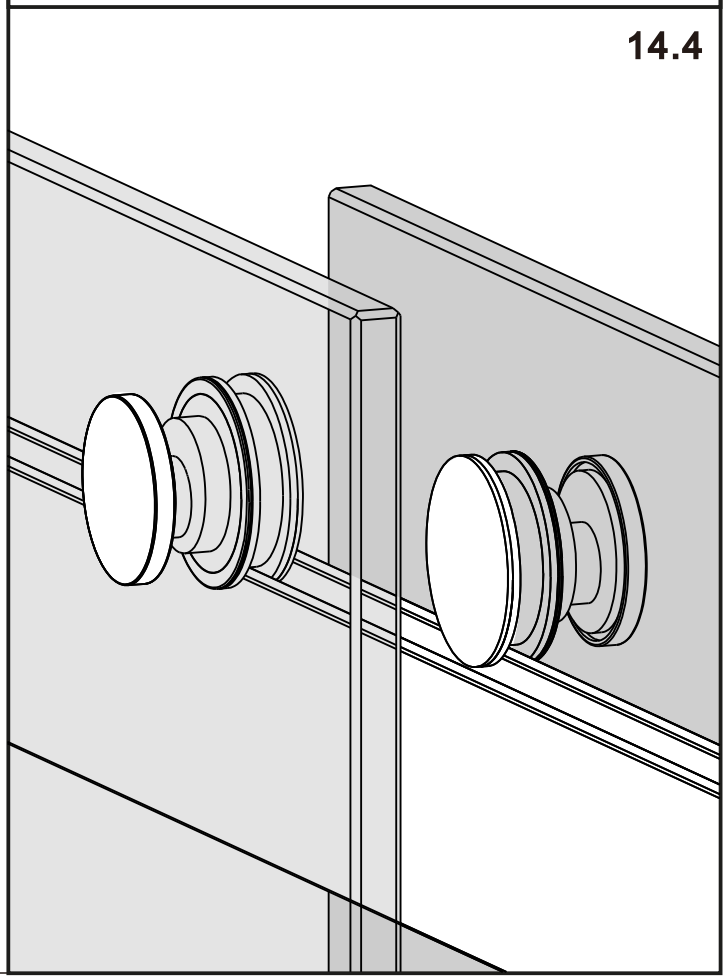

## 15

Install the door panel.

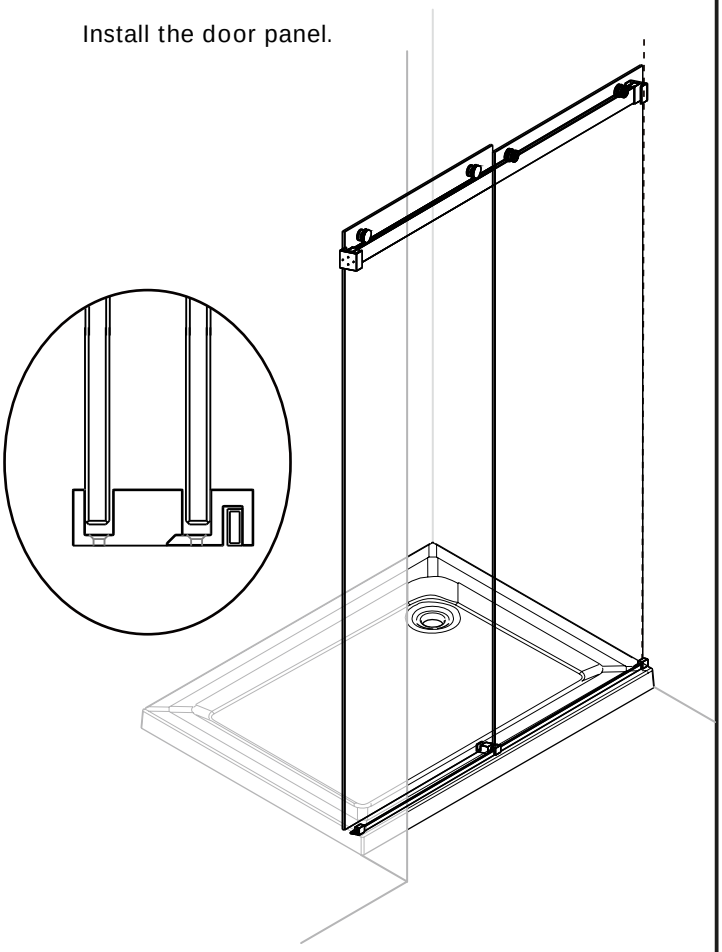

## 15.1

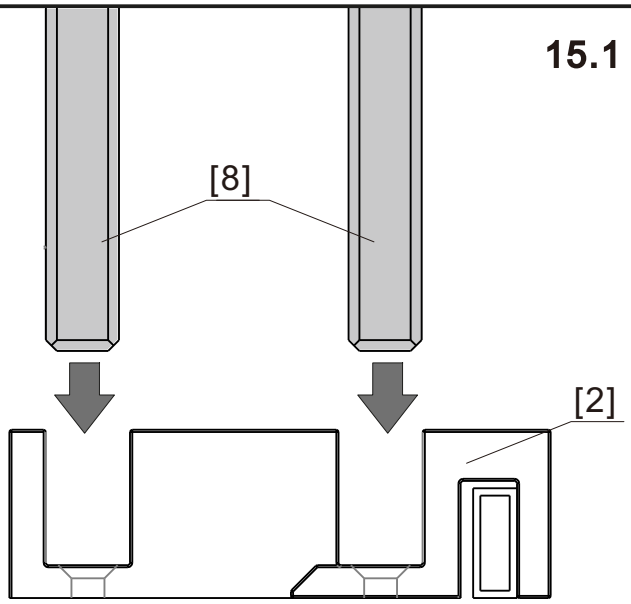


## 15.2

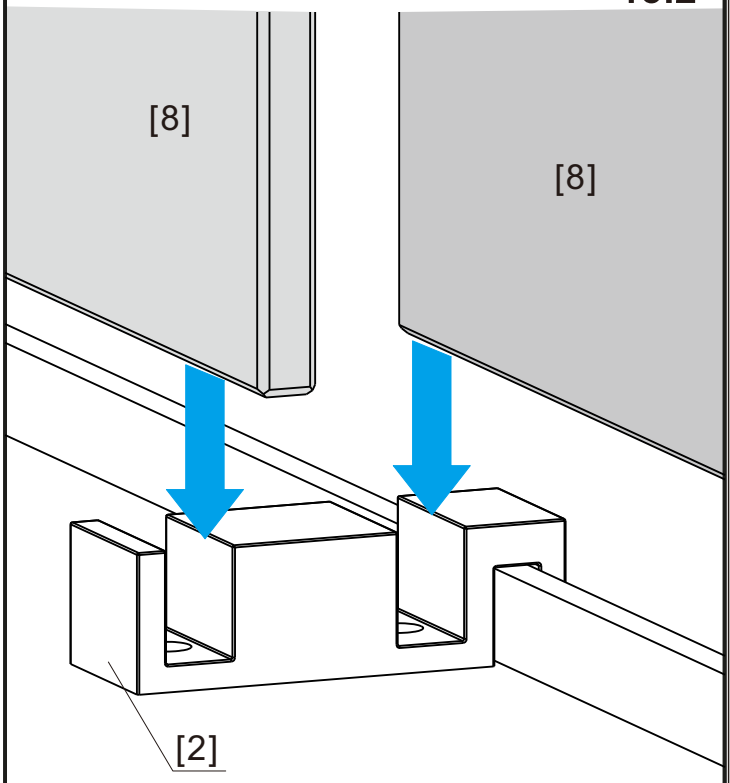


## 15.3

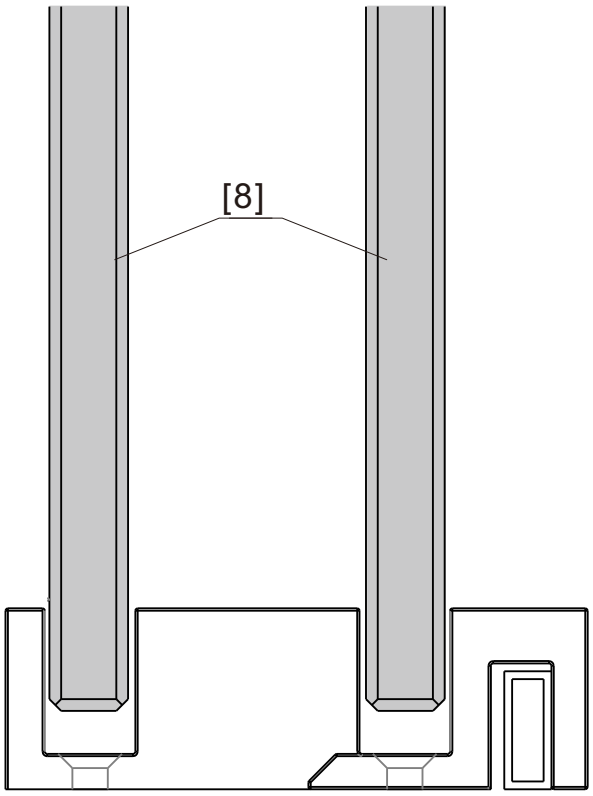


**OK** ✓

The movable glass is installed.

## 15.4

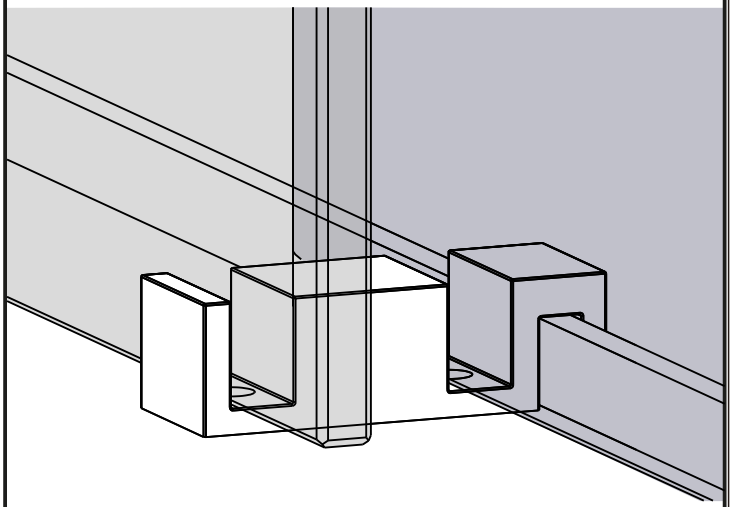

Install the sliding glass panel.

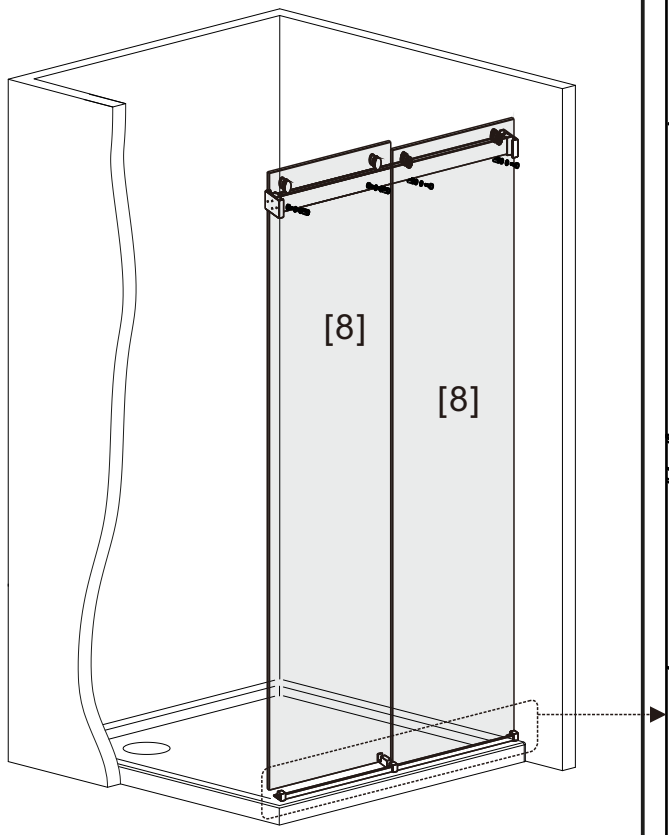


16.1

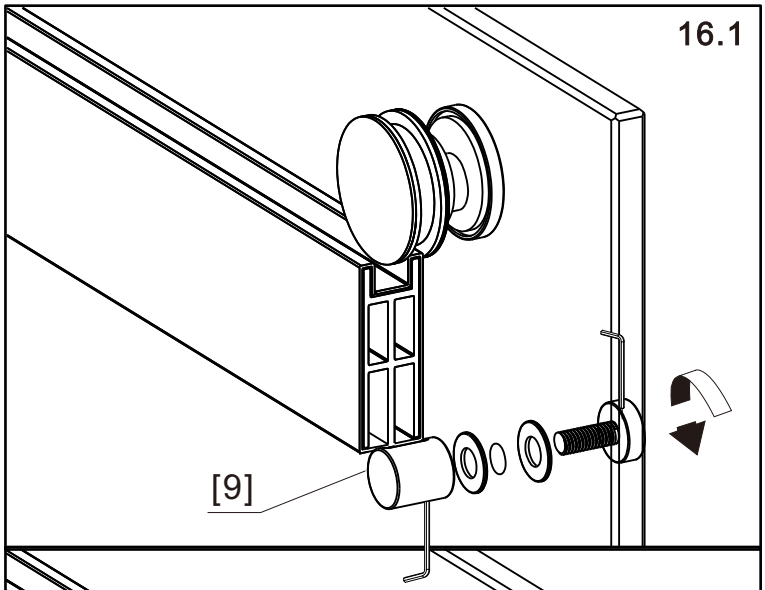


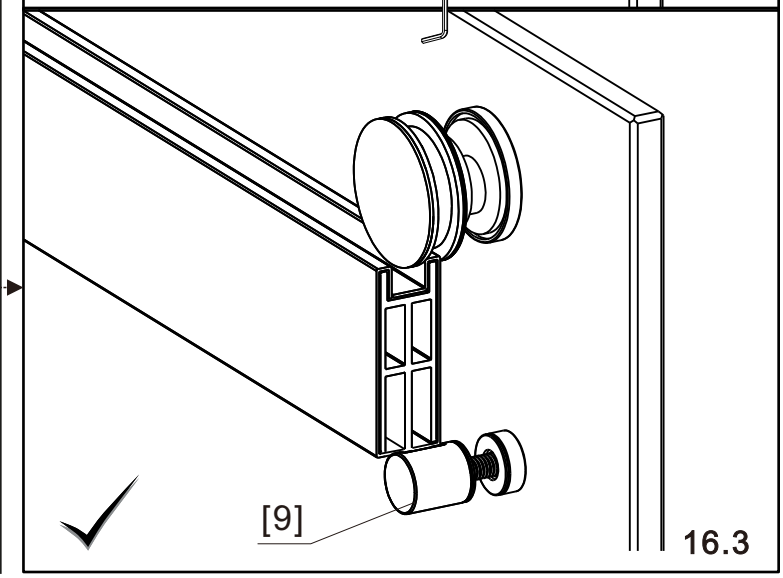


16.3

Install the anti-jump device.

16.2

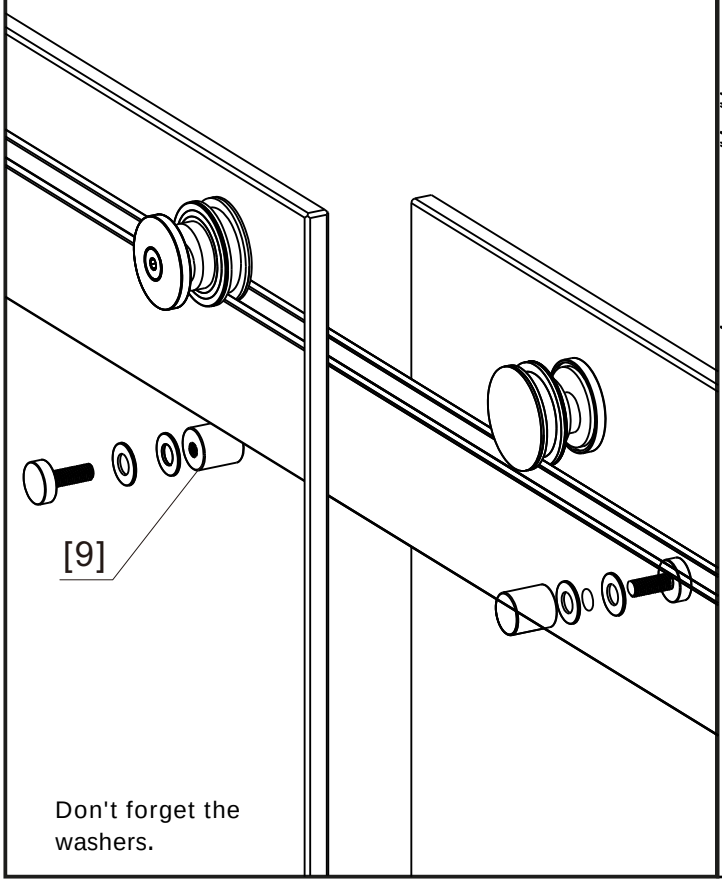


Don't forget the washers.

Completed assembly diagram.

16.4

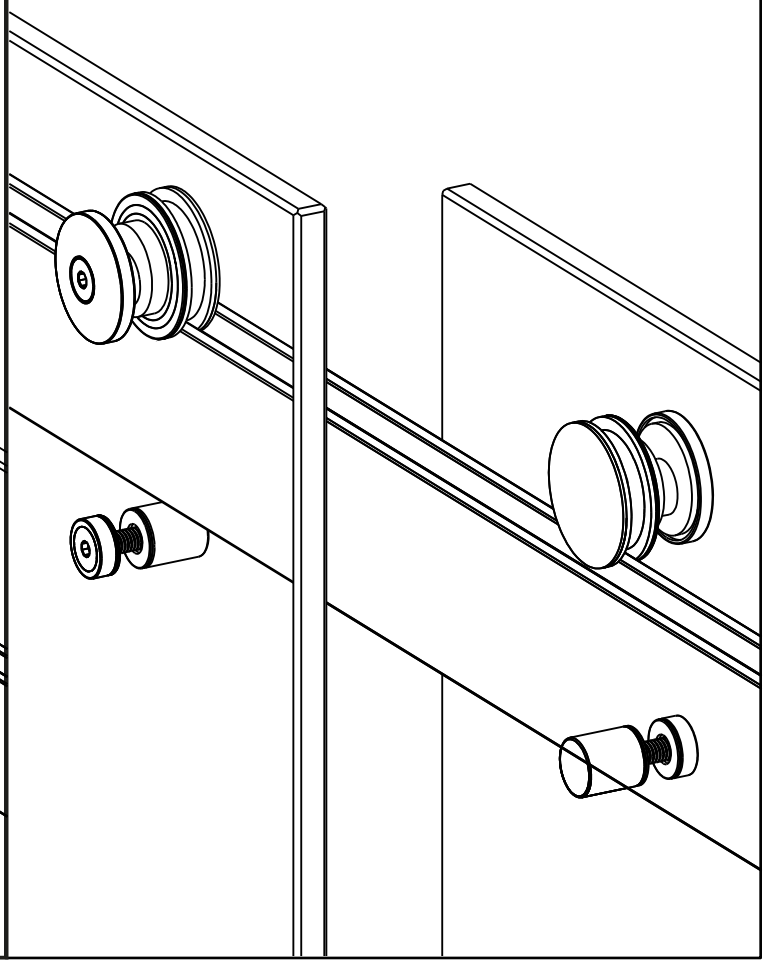

## 17

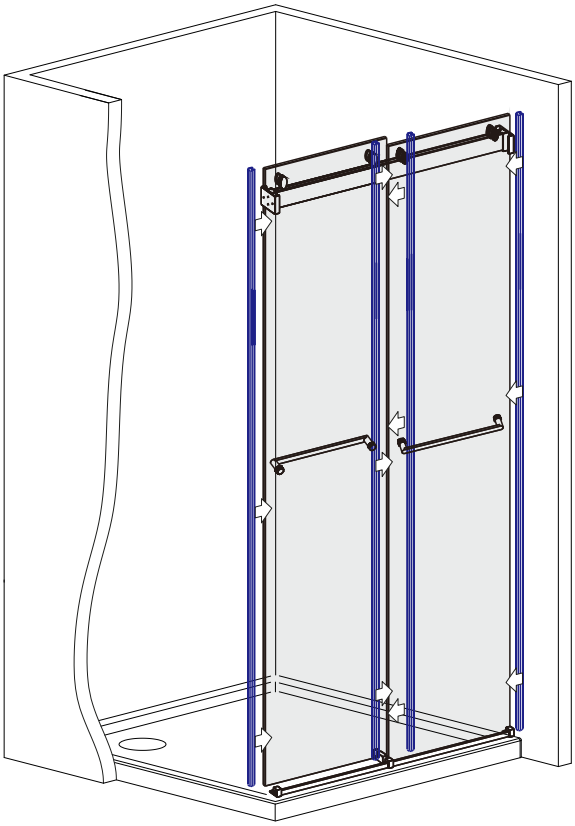

## 17.1

Install the door handle.
Attach handle [7] to the sliding glass [8].

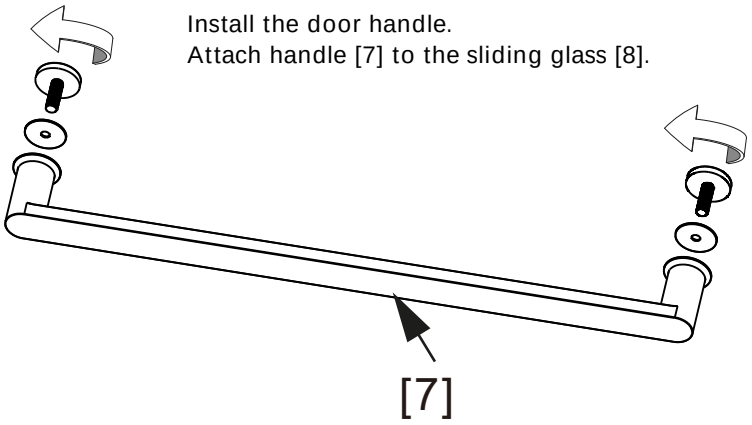


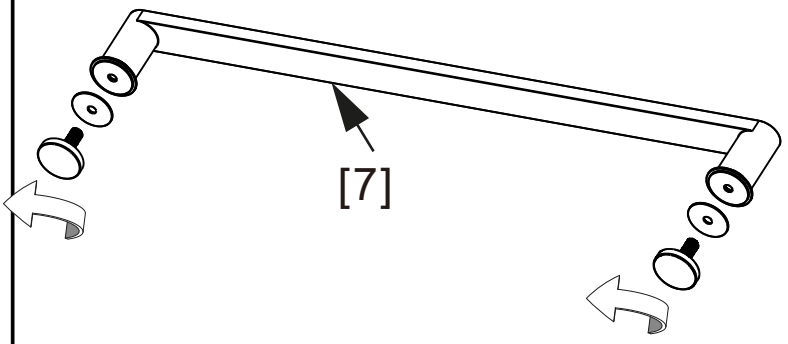


## 17.2

Install the water-stop seal strip [6] on both the fixed glass and the sliding glass.

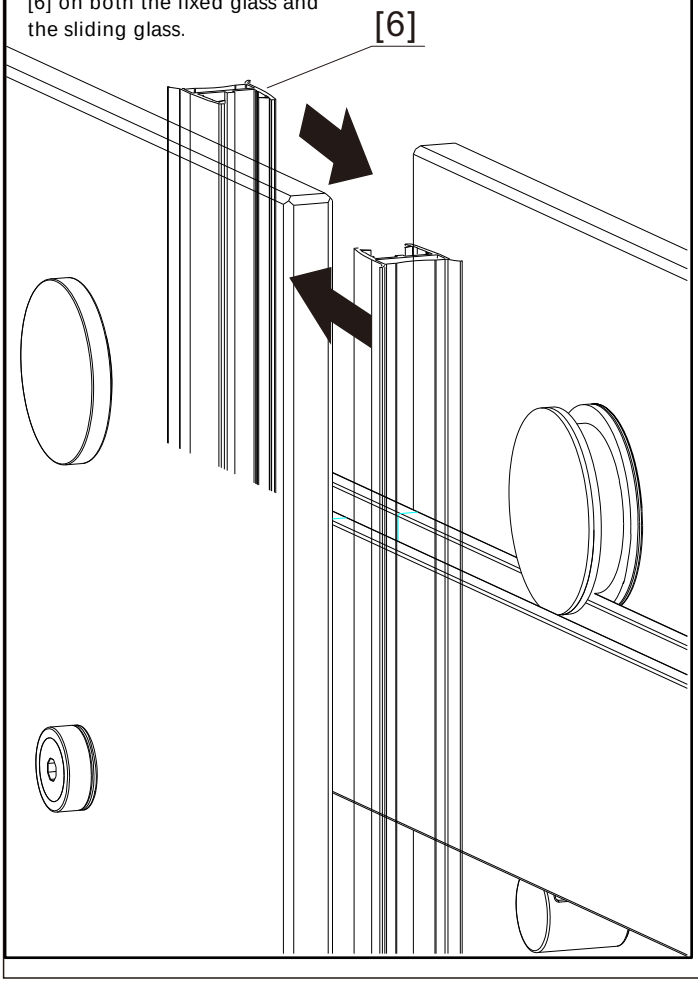


## 17.3

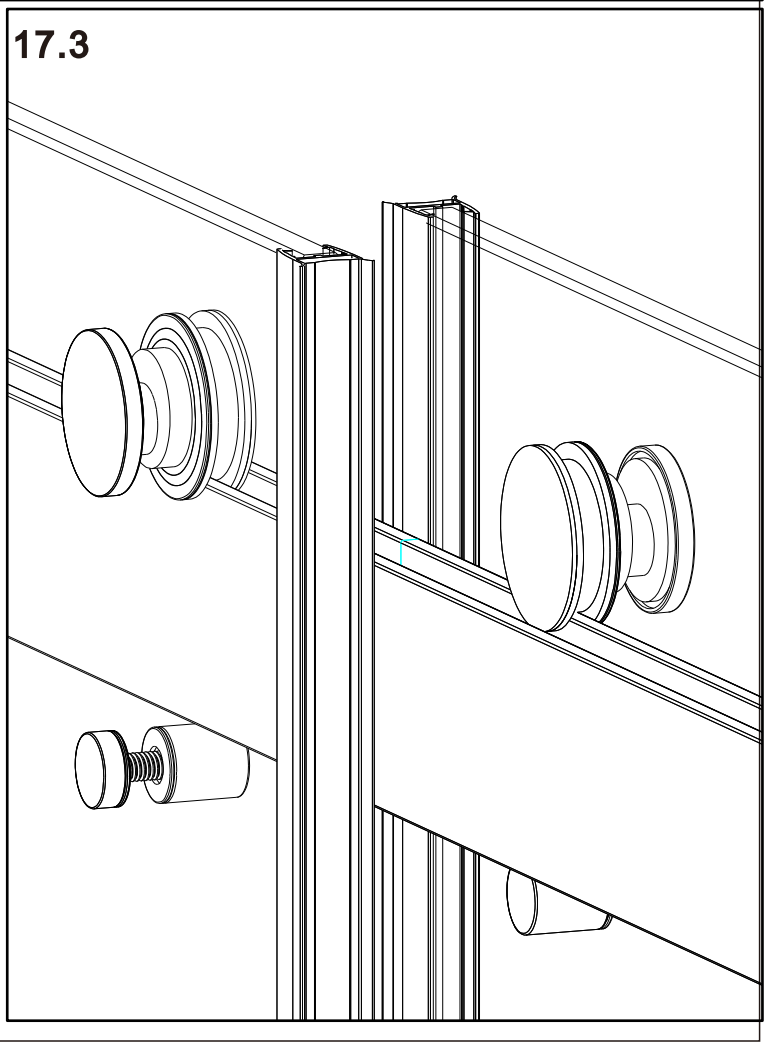

18

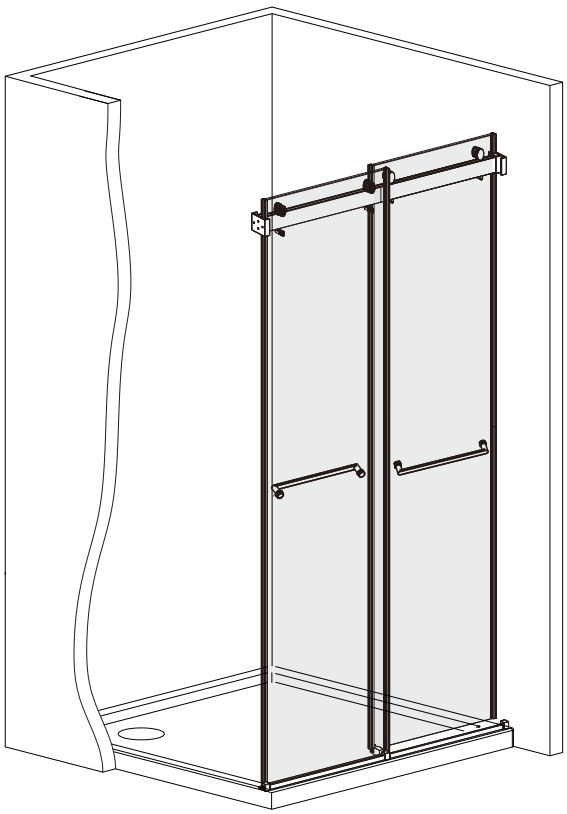

18.1

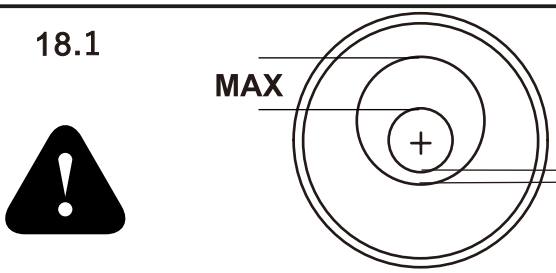


Ensure the sliding door fits snugly against the wall.If necessary, adjust the eccentric washers on the rollers.

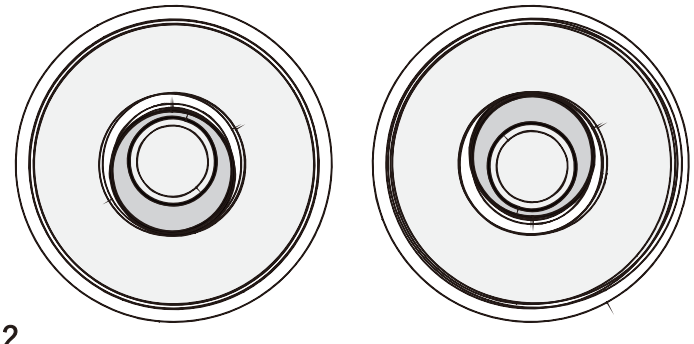

18.2

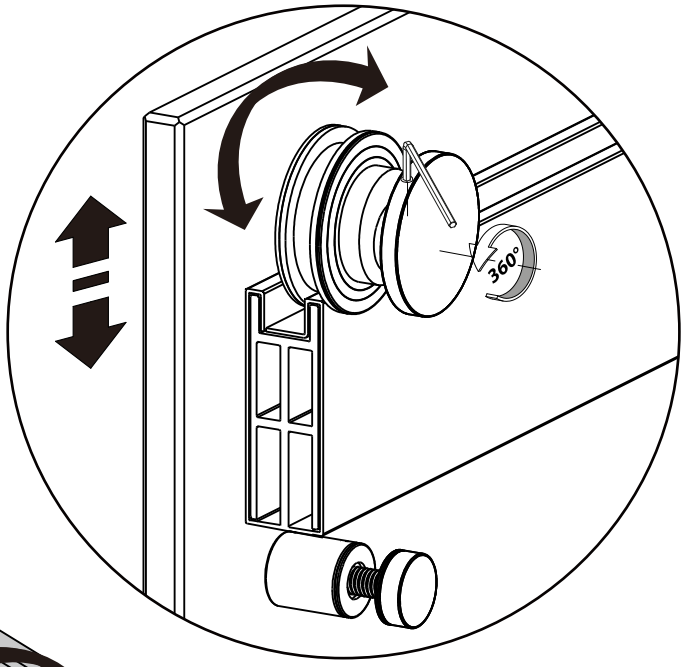


18.3

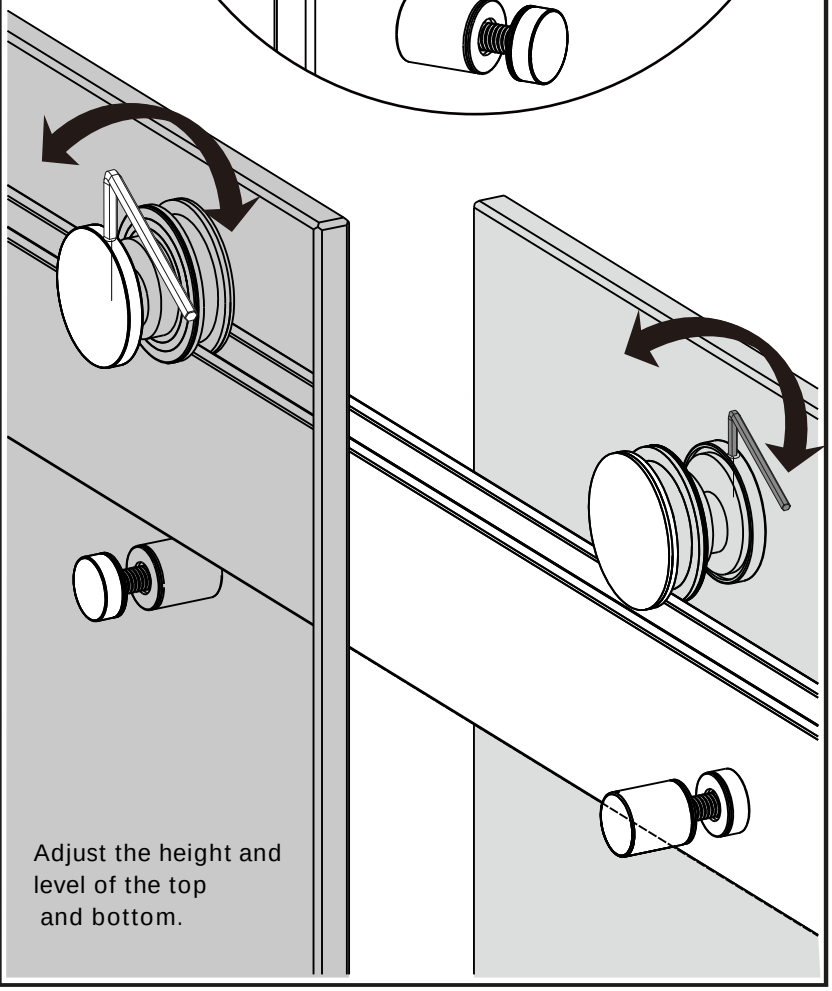

Adjust the height and level of the top and bottom.

18.4

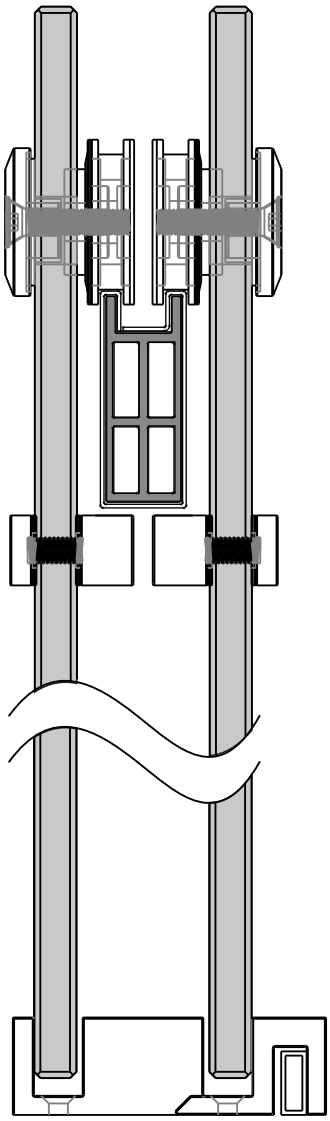

## 20

Ensure the shower door closes securely and opens smoothly.Use silicone sealant to seal between the water-stop strip and the waterproof threshold.

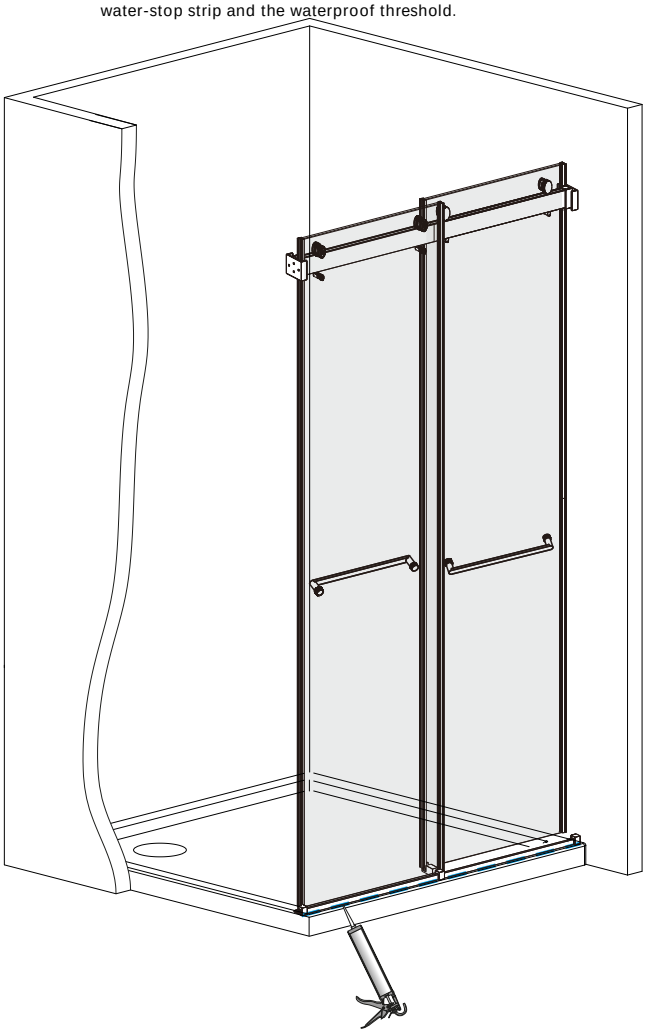








Before applying silicone sealant, wipe the base with a clean cloth.

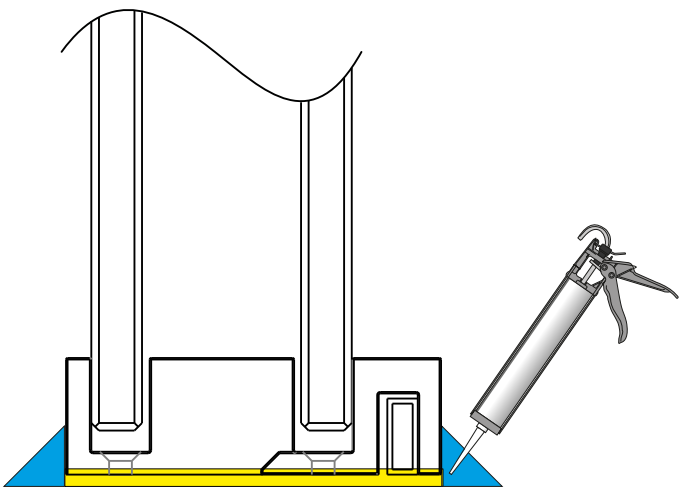

## 20.1

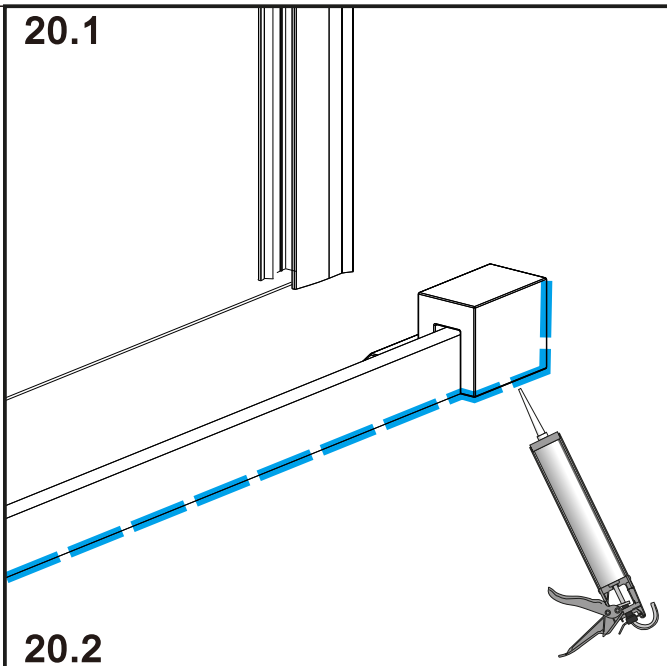

## 20.2

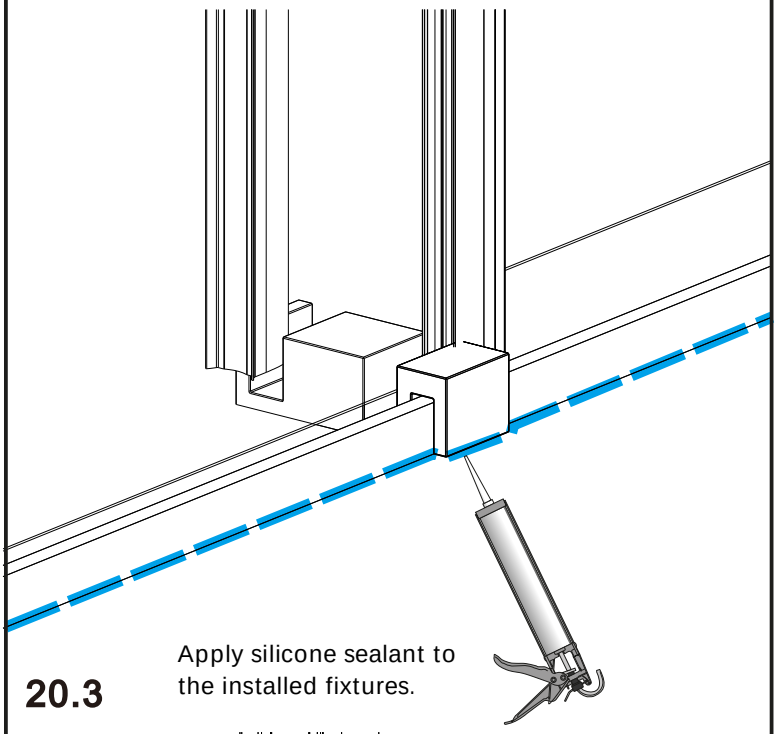

## 20.3

Apply silicone sealant to the installed fixtures.

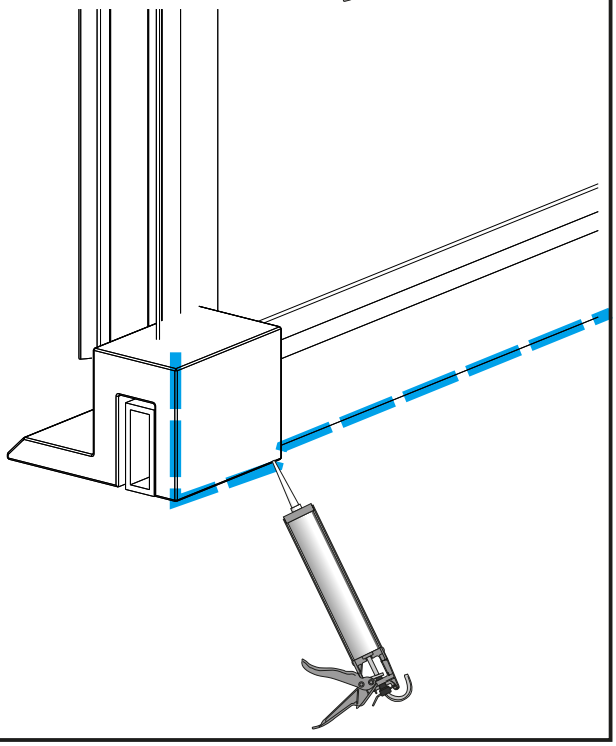

# THANK YOU

We hope you enjoy
your purchase.

All of our products are crafted with an
obsessive attention to detail.

Any problem with installation,
please watch the video.

Scan Me