ASSEMBLY INSTRUCTIONS

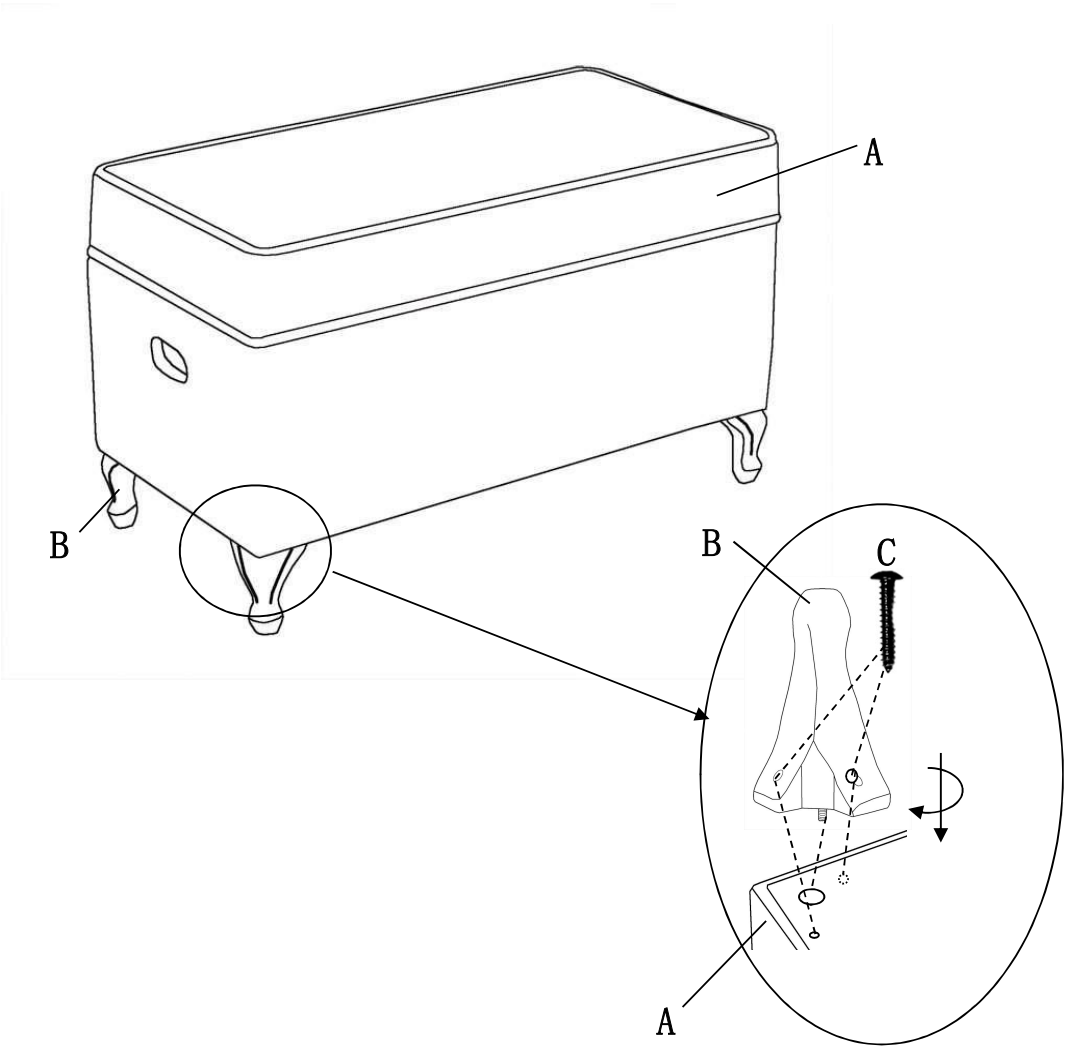

A	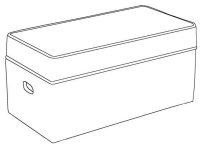	**1PC**	**B**		**4PCS**
C	 φ 4mm*30mm	**8PCS**			